State of Utah

GARY R. HERBERT
Governor

GREG BELL
Lieutenant Governor

DEPARTMENT OF TRANSPORTATION

JOHN R. NJORD, P.E.
Executive Director

CARLOS M. BRACERAS, P.E.
Deputy Director

April 14, 2010

TO ALL BIDDERS CONCERNED:

SUBJECT: F-LC05(36)
100 East; Providence Lane to 800 South
Addendum No. 2

To Whom It May Concern:

We are submitting the following changes to the subject project.

1. Special Provision 00250S "Prebid Conference" has been deleted.

2. Please note that the structure sheets pages 1-8 that were placed on the web were corrupted. New sheets have been placed on the website, please download those instead.

Please consider these revisions before submitting your bid.

***ADDENDUM IS AVAILABLE AND MAY BE DOWNLOADED FROM THE UDOT WEBSITE AT
http://www.udot.utah.gov/index.php?m=c&tid=317

RECEIPT OF THIS ADDENDUM MUST BE ACKNOWLEDGED WHEN YOU SUBMIT YOUR BID. YOUR BID WILL BE DECLARED NON-RESPONSE IF YOU DO NOT ACKNOWLEDGE THIS ADDENDUM.

LICENSED PROFESSIONAL ENGINEER
P.K.N.
No. 179884
PETER K.
NEGUS
4-15-10
STATE OF UTAH

Sincerely,

Marjorie Rasmussen

Marjorie Rasmussen
UDOT Project Manager

Sincerely,

Pete Negus

Pete Negus
Deputy Construction Engineer

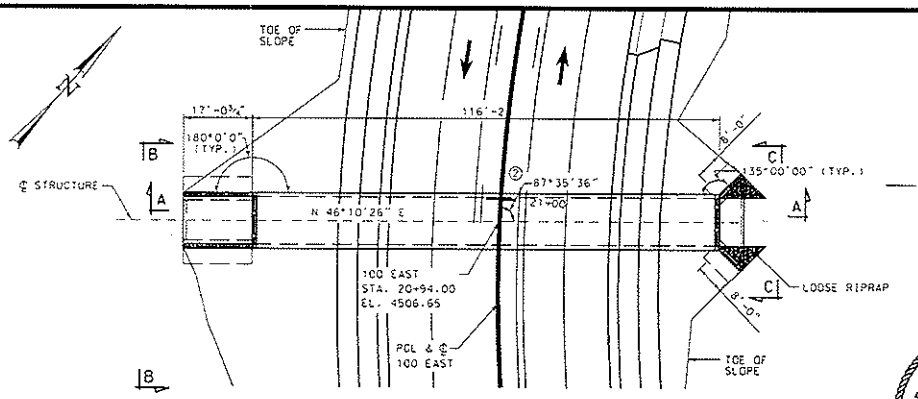

PLAN

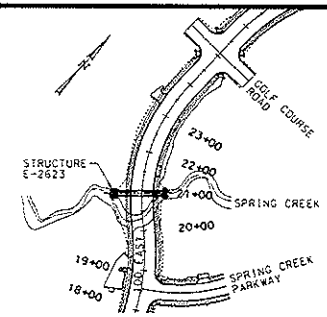

LOCATION PLAN

100 EAST CURVE DATA

CURVE NO. 2
Δ = 48°03'07"
T = 182.72
L = 343.85
R = 410.00
P1 = 22+22.15
N = 3784574.376
E = 1550575.652
PC BRG. = N47°06'14"W
PT BRG. = N00°56'53"E

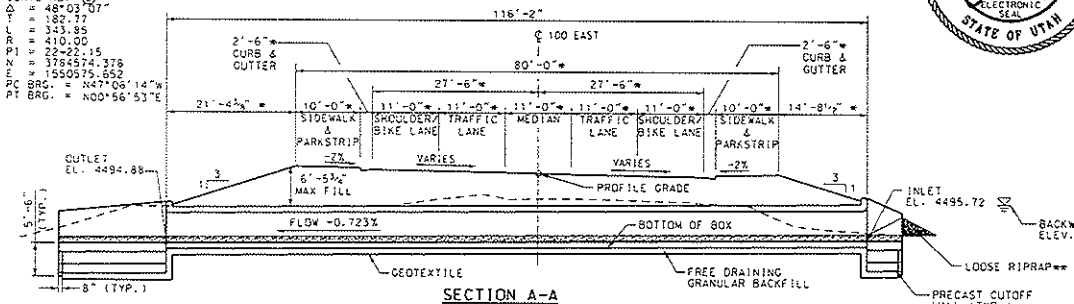

SECTION A-A

* NORMAL TO ROADWAY

** INCLUDED IN ROADWAY ITEM

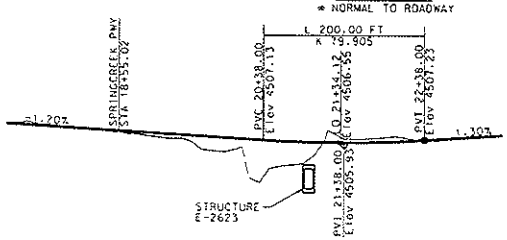

100 EAST PROFILE

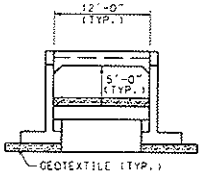

SECTION B-B

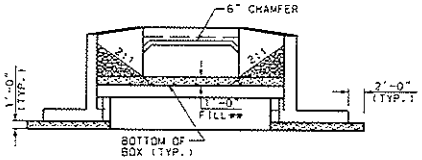

SECTION C-C

HYDRAULIC DATA

1. DRAINAGE AREA ..... 19.9 SQ. MI.
2. INLET FLOW LINE ELEVATION ..... 4496.72 FT.
3. OUTLET FLOW LINE ELEVATION ..... 4495.88 FT.
4. CHANNEL SLOPE 0.72%
5. CHANNEL BOTTOM WIDTH ..... 8.00 FT.
6. RIGHT SIDE OF SLOPE 1:1
7. LEFT SIDE SLOPE 1.5:1
8. DESIGN FREQUENCY (YEARS) ..... 100 YEARS
9. DESIGN FLOW (Qd) ..... 300 CFS
10. INLET WATER SURFACE ELEVATION (Qd) ..... 4501.92 FT.
11. OUTLET WATER SURFACE ELEVATION (Qd) ..... 4500.71 FT.
12. OUTLET VELOCITY (Qd) ..... 6.25 FT./SEC.
13. 100 YEAR FLOW (Q100) ..... 300 CFS
14. INLET WATER SURFACE ELEVATION (100) ..... 4501.92 FT.
15. OUTLET WATER SURFACE ELEVATION (100) ..... 4500.71 FT.
16. OVERTOPPING DISCHARGE ..... 420 CFS
17. FREQUENCY OF OVERTOPPING FLOW (500 YEAR MAX.) ..... 500 YEARS
18. OVERTOPPING ELEVATION ..... 4503.8 FT.
19. RIP RAP LAYER SIZE FOR DESIGN VELOCITY-(D50=20) ..... 15 IN.

GENERAL NOTES

1. USE EPOXY-COATED DEFORMED CARBON STEEL BARS CONFORMING TO AASHTO M 284 AND M 31 GRADE 60, RESPECTIVELY.
2. CHAMFER ALL EXPOSED CONCRETE CORNERS ¾" EXCEPT WHERE NOTED OTHERWISE.
3. PROVIDE 2" CONCRETE COVER TO REINFORCING STEEL EXCEPT WHERE NOTED OTHERWISE.
4. USE CLASS 3A(AE) PRECAST CONCRETE EXCEPT WHERE SPECIFIED OTHERWISE.
5. ALL DIMENSIONS ARE SHOWN IN FEET AND INCHES UNLESS SPECIFIED OTHERWISE. ELEVATIONS ARE SHOWN IN FEET.
6. MATERIALS, CONSTRUCTION AND WORKMANSHIP SHALL BE IN ACCORDANCE WITH UTAH DEPARTMENT OF TRANSPORTATION STANDARD SPECIFICATIONS FOR ROAD AND BRIDGE CONSTRUCTION.

INDEX OF SHEETS

1. SITUATION AND LAYOUT
2. PRECAST SECTION & JOINT DETAILS
3. END SECTIONS AND DETAILS
4. WINGWALL DETAILS
5. FOOTING DETAILS
6. APRON DETAILS
7. HEADWALL AND ASSEMBLED DETAILS
8. REINFORCING STEEL SCHEDULE

DESIGN DATA

PRECAST CONCRETE BOX CULVERT:
HS25 IN ACCORDANCE WITH 2002 AASHTO STANDARD SPECIFICATIONS FOR HIGHWAY BRIDGES AND ASTM C1433.
PRECAST CONCRETE RETAINING WALL, FOOTINGS AND PARAPET:
2007 AASHTO LRFD BRIDGE DESIGN SPECIFICATIONS AND 2008 INTERIM SPECIFICATIONS.

PRECAST CONCRETE: f'c = 5,000 PSI; fy (REINF.) = 60,000 PSI
CLASS 3A(AE) n = 7
DESIGN SPEED: 100 EAST 35 MPH
DESIGN COVER: 1'-0" TO 7'-0"

CULVERT LOAD RATING

	HS25	
	RATING	LOCATION
INV.	1.00 MIN.	PROVIDE BY MANUFACTURER
OPER.	1.00 MIN.	PROVIDE BY MANUFACTURER

F DENOTES RATING CONTROLLED BY FLEXURE
S DENOTES RATING CONTROLLED BY SHEAR

QUANTITIES

ITEM	ESTIMATED	UNIT	AS CONSTRUCTED
FREE DRAINING GRANULAR BACKFILL (PLAN QUANTITY)	102	CU YD	
PRECAST CONCRETE BOX CULVERT	1	LUMP	
GEOTEXTILE	304	SQ YD	

PROFESSIONAL ENGINEER — ELECTRONIC SEAL — No. 11462 — DANIEL A. HUBBARD — 10/27/2010 — STATE OF UTAH

NO.	DATE	BY	REVISIONS

ORIGINAL RECOMM. 1/7/10 — REVISIONS RECOMM. — ORIGINAL DESIGN — REVISIONS DESIGN

REVISED 08/09 — CHECK DJC 08/09
REVISED 08/09 — CHECK DJC 08/09
REVISED 11/09 — CHECK DJC 11/09

UTAH DEPARTMENT OF TRANSPORTATION
STRUCTURES DIVISION

100 EAST; PROVIDENCE LANE TO 800 SOUTH
100 EAST OVER SPRING CREEK
SITUATION AND LAYOUT

PROJECT NUMBER F-LC05(36) — PIN 6068

CACHE COUNTY — E-2623 ORG. NO.

SHT. 1 OF 8

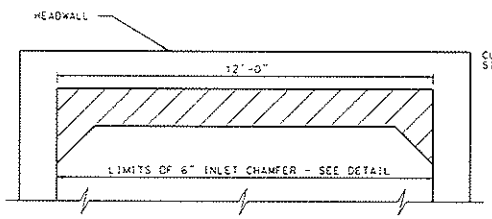

CULVERT CHAMFER DETAIL

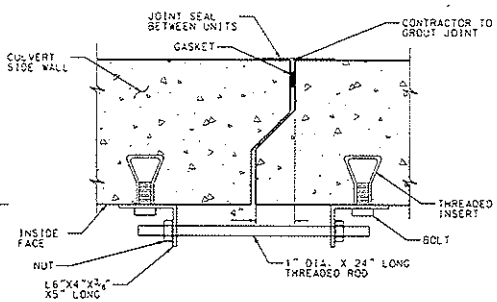

CLOSURE HARDWARE DETAIL

NOTES:

1. CLOSURE HARDWARE IS TEMPORARY. AFTER INSTALLATION REMOVE ALL HARDWARE EXCEPT THREADED INSERT.
2. BOXES MUST BE PULLED TO A 1/2" GAP TO ACHIEVE DIMENSIONS ON THIS PLAN

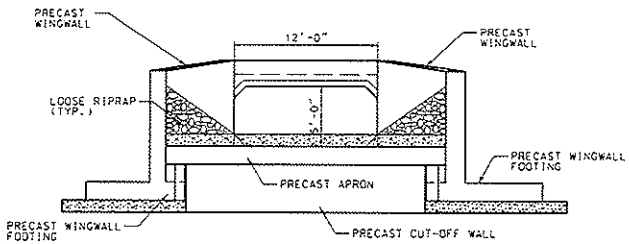

SECTION D-D (INLET END ELEVATION)

1. BOX END SEGMENTS SPECIFIED AND DESIGNED BY MANUFACTURER EXCEPT REINFORCING, AND DETAILS REQUIRED FOR HEADWALL TO CONNECT TO BOX.
2. SEE "HEADWALL AND ASSEMBLED DETAILS" SHEET FOR MORE DETAILS.

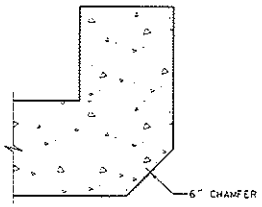

TOP SLAB INLET EDGE DETAIL

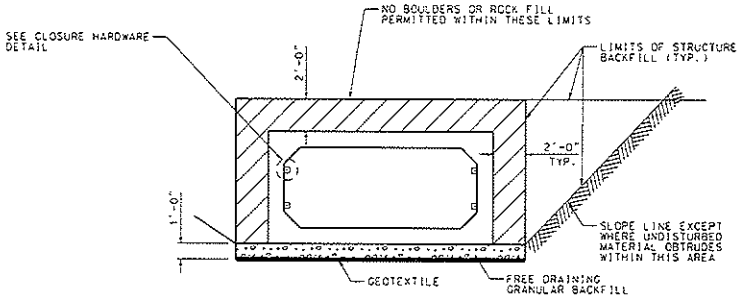

PRECAST BOX SECTION

SPECIFIED AND DESIGNED BY MANUFACTURER (EXCEPT AS NOTED IN END SEGMENTS)

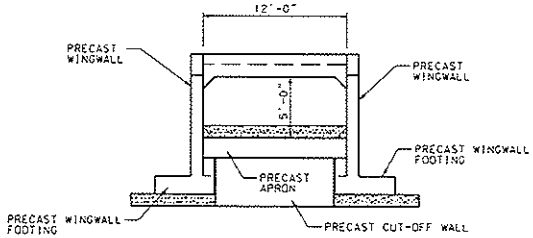

SECTION E-E (OUTLET END ELEVATION)

1. BOX END SEGMENTS SPECIFIED AND DESIGNED BY MANUFACTURER EXCEPT REINFORCING, AND DETAILS REQUIRED FOR HEADWALL TO CONNECT TO BOX.
2. SEE "HEADWALL AND ASSEMBLED DETAILS" SHEET FOR MORE DETAILS.

PROFESSIONAL ENGINEER
ELECTRONIC SEAL
No. 11462
DANIEL J. HUBOWSKI
01/27/2010
ELECTRONIC SEAL
STATE OF UTAH

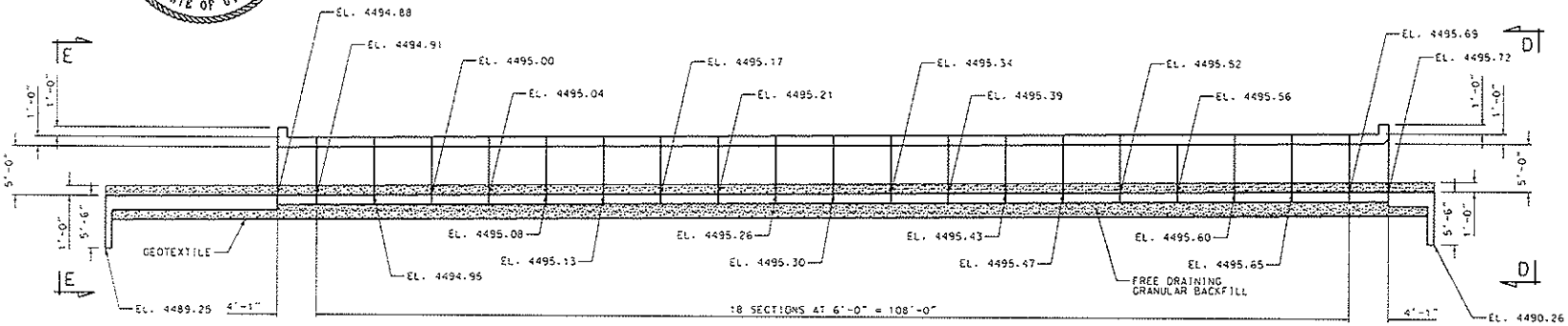

ELEVATION

NO.	DATE	BY	REVISIONS

DESIGN	AJB	11/09	CHECK DJC 11/09
DRAWN	ROB	07/09	CHECK DJC 11/09
CHANGE	AJB	11/09	CHECK DJC 11/09

APPROVED FOR CONSTRUCTION 1/27/10 DATE

APPROVED FOR BIDDING 01/27/10 DATE

UTAH DEPARTMENT OF TRANSPORTATION
STRUCTURES DIVISION

100 EAST; PROVIDENCE LANE TO 800 SOUTH
100 EAST OVER SPRING CREEK
PRECAST SECTION & JOINT DETAILS

PROJECT NUMBER F-LC05(36)

PIN 6068

CACHE COUNTY

E-2623 DRG. NO.

SHT. 2 OF 8

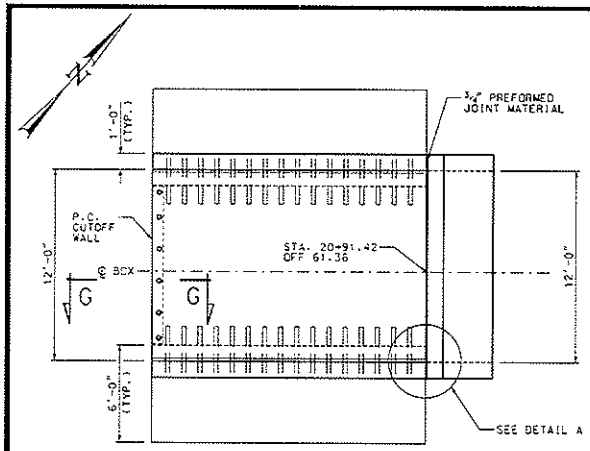

OUTLET END SEGMENT PLAN

SEE FOOTING DETAILS SHEET FOR DETAIL A

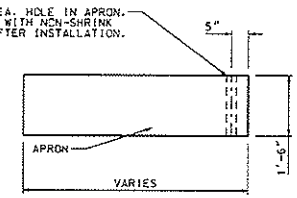

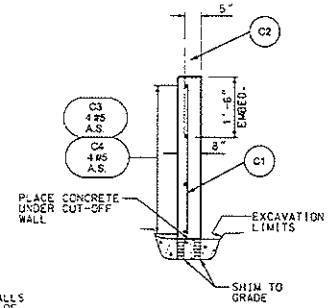

SECTION G-G

* f'c = 5000 psi

NOTE:

INCLUDE THE COST OF CUT-OFF WALLS COMPLETE IN PLACE IN THE COST OF "PRECAST CONCRETE BOX CULVERT".

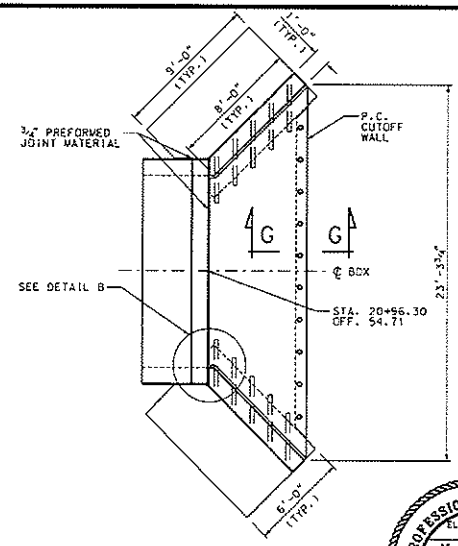

INLET END SEGMENT PLAN

SEE FOOTING DETAILS SHEET FOR DETAIL B

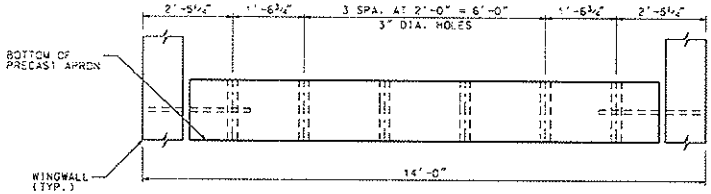

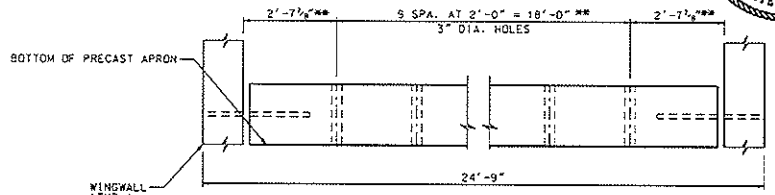

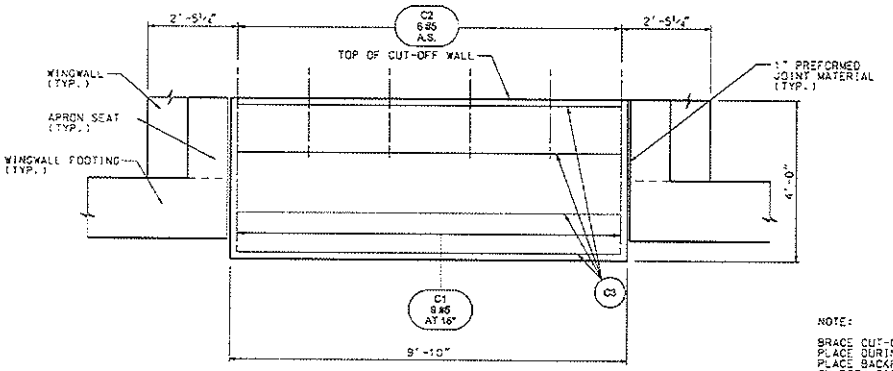

OUTLET CUTOFF WALL ELEVATION

NOTE:

BRACE CUT-OFF WALL IN PLACE DURING BACKFILLING. PLACE BACKFILL EQUALLY ON BOTH SIDES

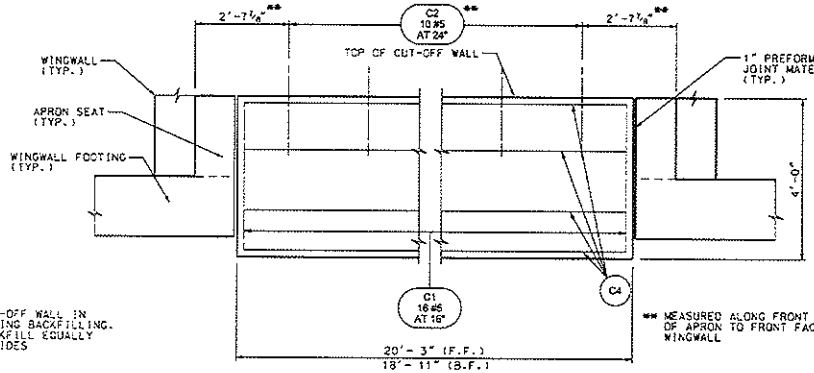

** MEASURED ALONG FRONT FACE OF APRON TO FRONT FACE OF WINGWALL

INLET CUTOFF WALL ELEVATION

PROFESSIONAL ENGINEER ELECTRONIC SEAL No. 11482 DANIEL L. BRIGHAM 01/27/2010 ELECTRONIC SEAL STATE OF UTAH

NO.	DATE	BY	REVISION/REMARKS
			DESIGN A.J.B. 8/09 CHECK D.J.C. 11/09
			DRAWN R.D.B. 7/09 CHECK D.J.C. 11/09
			QUANT. A.J.B. 11/09 QA/QC D.J.C. 11/09

APPROVED FOR PUBLICATION 1/27/10 DATE

APPROVED FOR CONSTRUCTION 01/29/10 DATE

UTAH DEPARTMENT OF TRANSPORTATION

STRUCTURES DIVISION

100 EAST; PROVIDENCE LANE TO 800 SOUTH

100 EAST OVER SPRING CREEK

END SECTIONS AND DETAILS

PROJECT NUMBER F-LC05(36) PIN 6068

CACHE COUNTY

E-2623 ORG. NO.

SHT. 3 OF 8

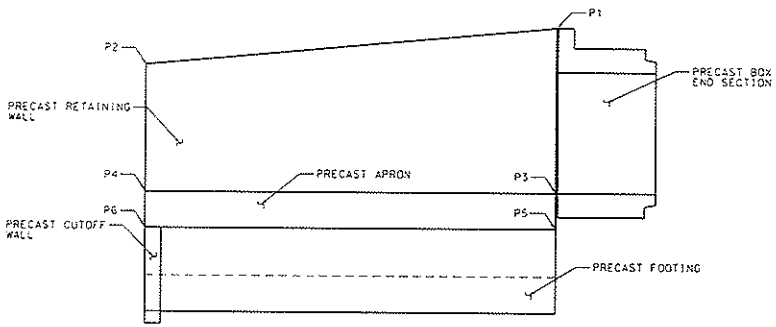

OUTLET WINGWALL

LOCATION	OUTLET WW	INLET WW
P1	4501.88	4502.72
P2	4500.00	4500.36
P3	4494.88	4495.72
P4	4494.75	4495.76
P5	4493.38	4494.22
P6	4493.25	4494.26

WINGWALL ELEVATIONS

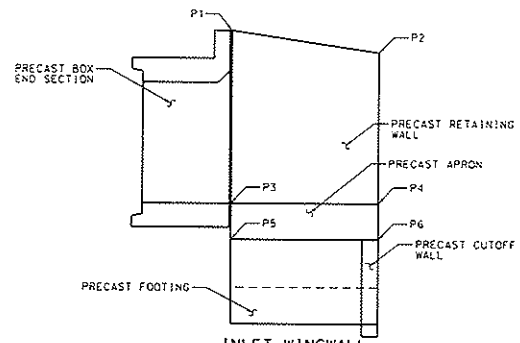

INLET WINGWALL

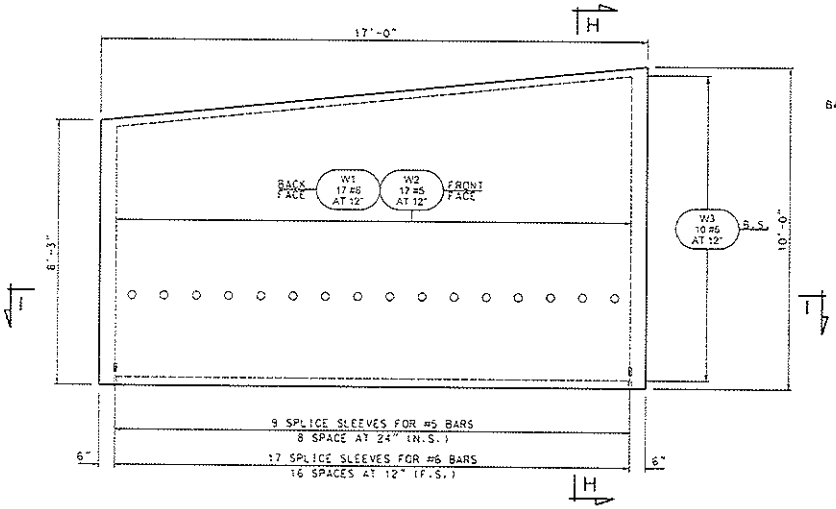

OUTLET WINGWALL ELEVATION

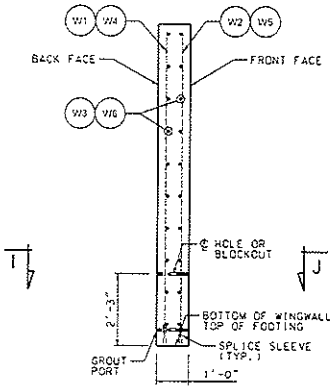

SECTION H-H

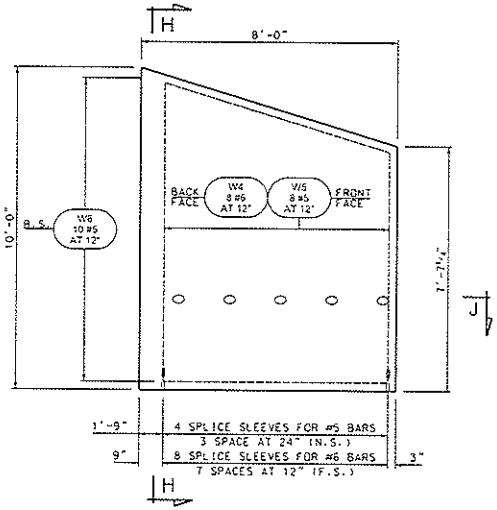

INLET WINGWALL ELEVATION

(ADJUST REBAR & SPICE SLEEVES TO MISS HOLES)

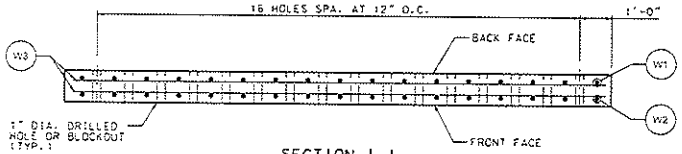

SECTION I-I

NOTE:

SPACE REINFORCING TO AVOID HOLES OR BLOCKOUTS

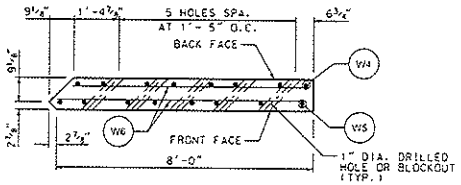

SECTION J-J

NO	DATE	REVISION	DESIGN	DRAWN	CHECK	DATE
			RGB 11/09	RGB 11/09	DJC 11/09	
			RJB 11/09	RJB 11/09	DJC 11/09	
			RJB 11/09	RJB 11/09	DJC 11/09	

MATERIAL DESIGNATION 1/7/10 DATE
ACCEPTANCE DESIGNATION 01/05/10 DATE

UTAH DEPARTMENT OF TRANSPORTATION
STRUCTURES DIVISION

100 EAST; PROVIDENCE LANE TO 800 SOUTH
100 EAST OVER SPRING CREEK
WINGWALL DETAILS

PROJECT NUMBER F-LC05(36) PIN 6068

CACHE COUNTY

E-2623 ORG. NO.

SHT. 4 OF 8

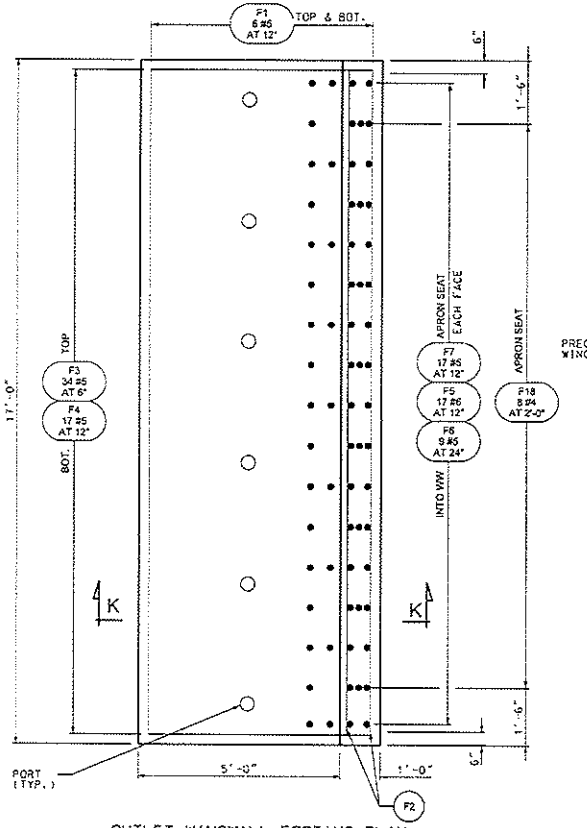

OUTLET WINGWALL FOOTING PLAN

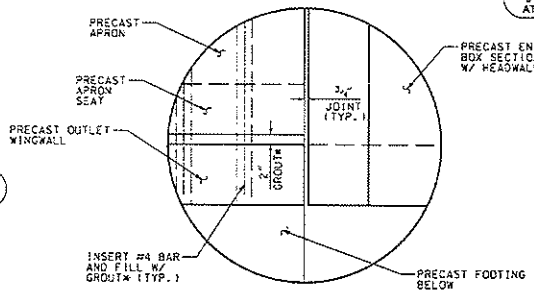

DETAIL "A"

* f'_c = 5,000 psi (NON-SHRINK)

NOTE:

PORT SPACING DETERMINED BY CONTRACTOR. SPACE PORTS TO AVOID REINFORCING BARS.

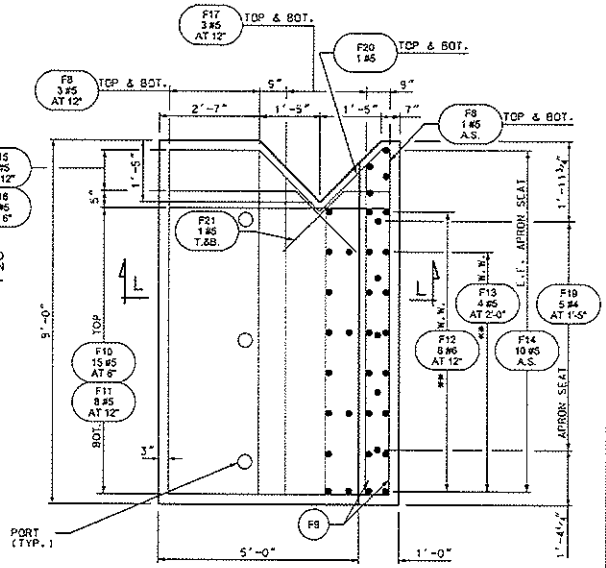

S.E. INLET WINGWALL FOOTING PLAN

(N.E. OPPOSITE HAND)
** ADJUST REBAR TO MATCH SPLICE SLEEVES IN WINGWALL

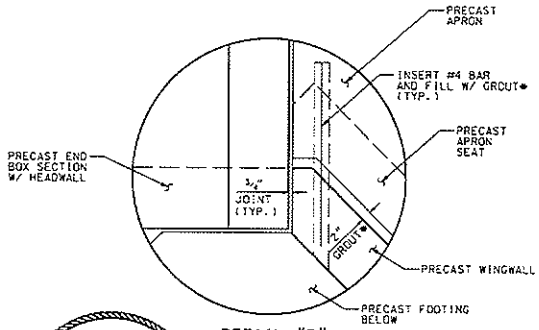

DETAIL "B"

* f'_c = 5,000 psi (NON-SHRINK)

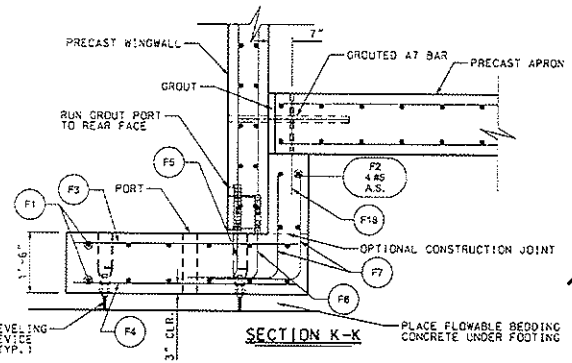

SECTION K-K

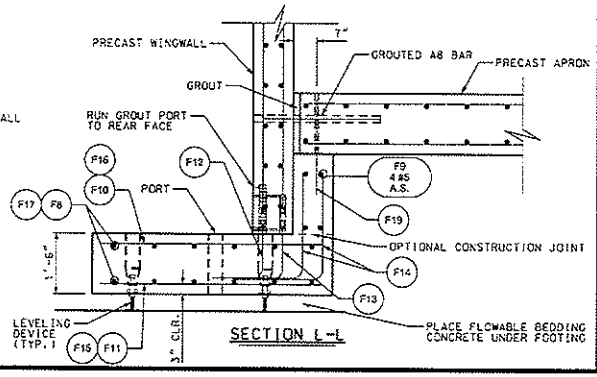

SECTION L-L

PROFESSIONAL ENGINEER
ELECTRONIC SEAL
No. 211462
DANIEL L. ROBINSON
07/27/2010
ELECTRONIC SEAL
STATE OF UTAH

NO	DATE	BY	REVISION/ISSUANCE	CHECK	DJC	11/09
			REVISION/ISSUANCE	CHECK	DJC	11/09
			REVISION/ISSUANCE	CHECK	DJC	11/09

DESIGN AJB 08/09 DRAWN AJB 08/09 QUALITY AJB 08/09

PRELIMINARY PLANS 1/27/10 DATE
APPROVED FOR CONSTRUCTION BY UDOT 07/27/10 DATE

UTAH DEPARTMENT OF TRANSPORTATION
STRUCTURES DIVISION

100 EAST; PROVIDENCE LANE TO 800 SOUTH
100 EAST OVER SPRING CREEK
FOOTING DETAILS

PROJECT NUMBER F-LC05(36) PIN 6068

CACHE COUNTY

E-2623 DRG. NO.

SHT. 5 OF 8

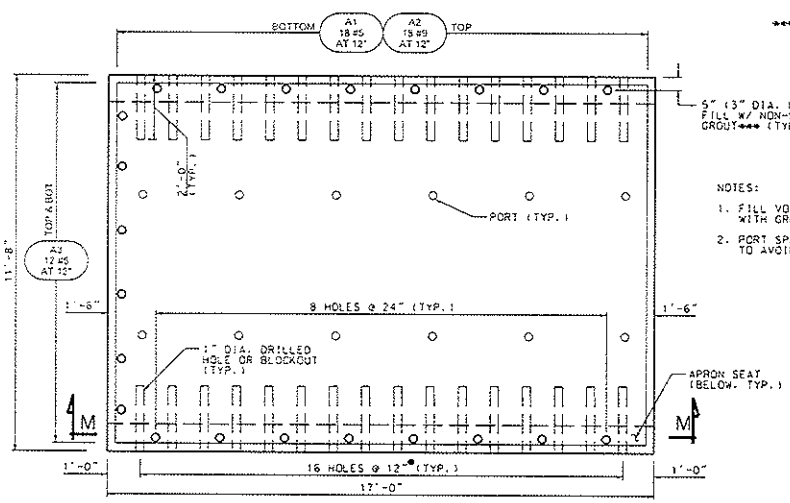

*** f'_c = 5000 PSI

NOTES:

1. FILL VOIDS UNDERNEATH APRON AND BEHIND CUTOFF WALL WITH GROUT OR FLOWABLE BEDDING CONCRETE.
2. PORT SPACING DETERMINED BY CONTRACTOR. SPACE PORTS TO AVOID REINFORCING BARS.

OUTLET APRON

* FOR A7 16 #4 A.S.

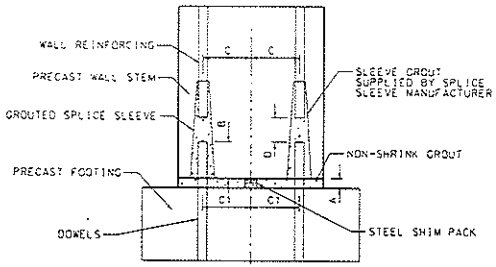

GROUTED SPLICE SLEEVE DETAILS

GROUTED SPLICE SLEEVE TOLERANCES		
A	SHIM PACK HEIGHT	3/4" +/- 3/8"
B	DOWEL HEIGHT	CONSULT MANUFACTURER
C C1	LOCATION OF WALL REINFORCING, GROUTED SPLICE SLEEVE, AND FOOTING DOWELS LOCATION OF WALL REINFORCING, GROUTED SPLICE SLEEVE, AND FOOTING DOWELS MEASURED FROM A COMMON REFERENCE POINT	+/- 1/4"
D	GAP BETWEEN DOWELS AND WALL REINFORCING	CONSULT MANUFACTURER

GROUTED SPLICE SLEEVE NOTES:

1. USE MATCHING TEMPLATES FOR THE LOCATION OF WALL REINFORCEMENT AND GROUTED SPLICE SLEEVE PLACEMENT WITHIN THE ELEMENTS TO CONTROL CRITICAL DIMENSIONS "C" AND "C1", WHICH WOULD BE IDENTICAL.
2. CONSULT MANUFACTURER OF THE GROUTED SPLICE SLEEVE FOR PROPER DIMENSIONS "B" AND "D" AND FOR TOLERANCE ON THESE DIMENSIONS.
3. BEFORE EXECUTING GROUTED SPLICE SLEEVE ASSEMBLIES, ALWAYS SEEK INSTALLATION RECOMMENDATIONS FROM THE MANUFACTUREROF THE GROUTED SPLICE SLEEVE USED.

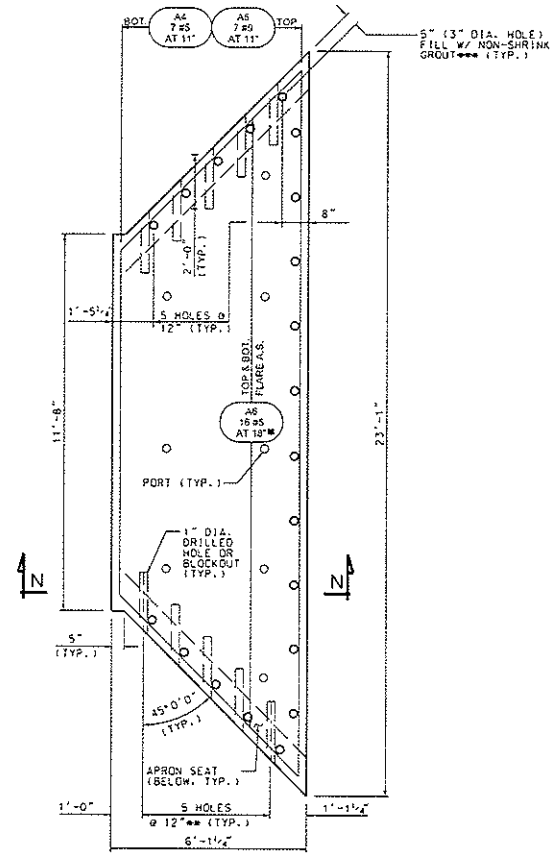

OUTLET APRON

■ MAX. SPACING

** FOR A8 5 #4 A.S.

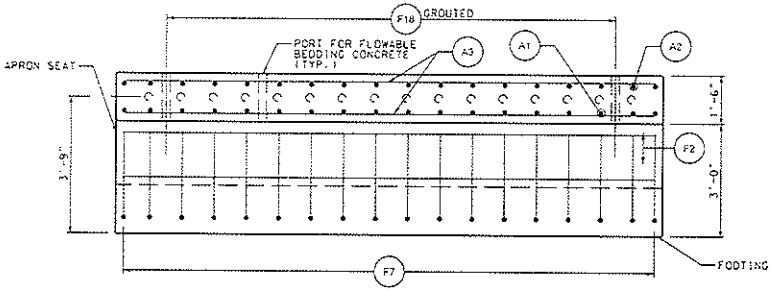

SECTION M-M

REINFORCING STEEL NOTES:

1. ADJUST REBAR TO AVOID HOLES.

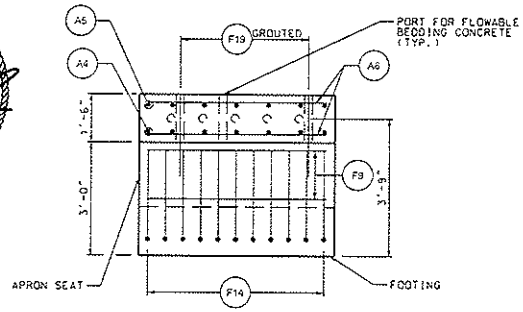

SECTION N-N

NO.	DATE	BY	REVISION	DATE	BY
			DESIGN A.J.B. 08/09	CHECK D.J.C. 11/09	
			DRAWN A.J.B. 08/09	DATE D.J.C. 11/09	
				FINAL A.J.B. 08/09	FINAL D.J.C. 11/09

APPROVED FOR RELEASE 1/7/10 ENGINEER

APPROVED FOR RELEASE 01/28/10 ENGINEER

UTAH DEPARTMENT OF TRANSPORTATION
STRUCTURES DIVISION

100 EAST; PROVIDENCE LANE TO 800 SOUTH
100 EAST OVER SPRING CREEK
APRON DETAILS

PROJECT MANAGER

PIN 6068

F-LC05(36)

CACHE COUNTY

E-2623 CRG. NO.

SHT. 6 OF 8

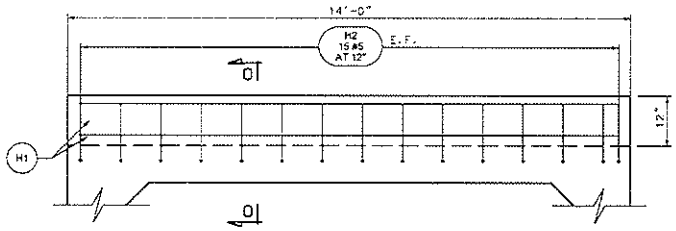

OUTLET HEADWALL

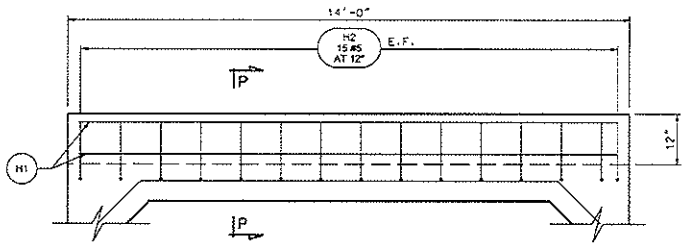

INLET HEADWALL

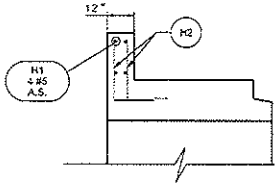

SECTION O-O

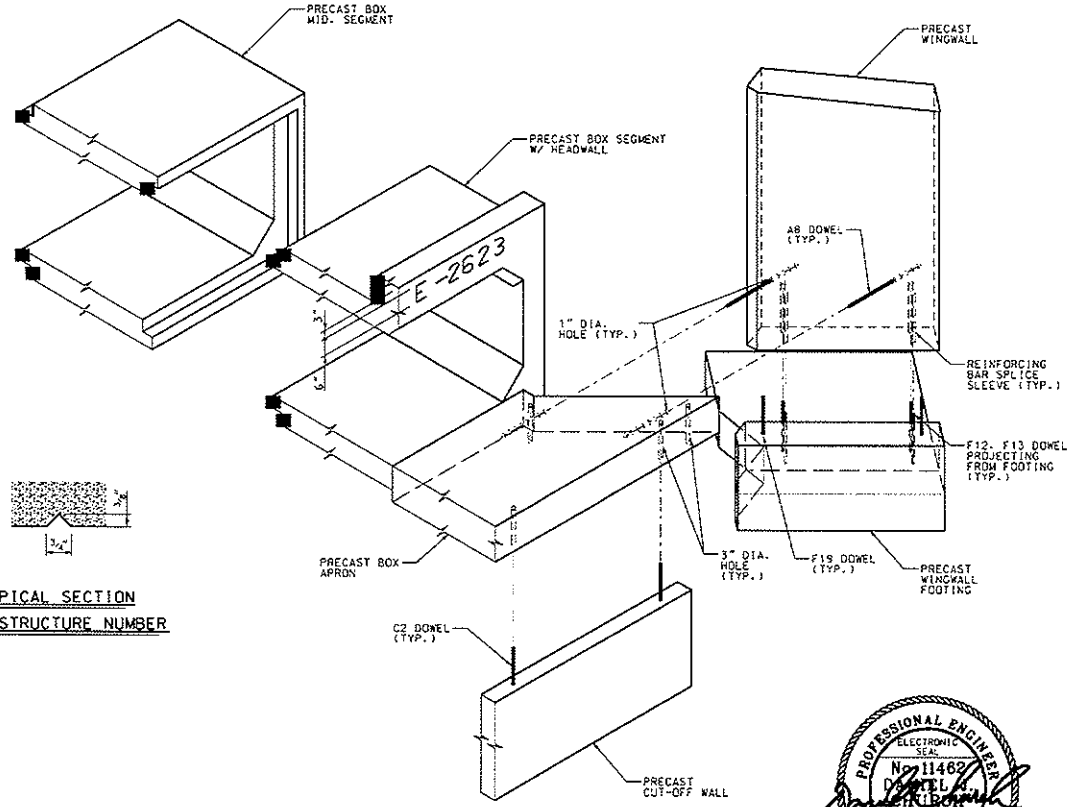

INLET END ISOMETRIC

NOT SHOWING ALL DOWELS FOR CLARITY

TYPICAL SECTION
THRU STRUCTURE NUMBER

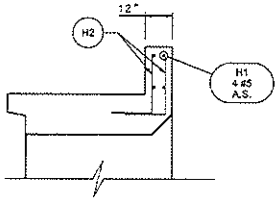

SECTION P-P

NO.	DATE	BY	REVISION
			AS-CONSTRUCTED
			DESIGN A.J.B. 08/09 CHECK D.J.C. 11/09
			DRAWN A.J.B. 08/09 CHECK D.J.C. 11/09
			QUANT. A.J.B. 08/09 CHECK D.J.C. 11/09

APPROVAL RECOMMENDED 1/7/10 DATE
APPROVED FOR CONSTRUCTION BY UDOT 01/26/10 DATE

UTAH DEPARTMENT OF TRANSPORTATION
STRUCTURES DIVISION

100 EAST, PROVIDENCE LANE TO 800 SOUTH
100 EAST OVER SPRING CREEK
HEADWALL AND ASSEMBLED DETAILS

PROJECT NUMBER F-LC05(36) PIN 6068

CACHE
COUNTY

E-2623
ORG. NO.

SHT. 7 OF 8

BAR MARK	LOCATION	BAR SIZE	NUMBER OF BARS	LENGTH (FT/IN)	TOTAL LENGTH (FT/IN)	SKETCH
A1	APRON	5	18	11'-4"	204'-0"	
A2	APRON	9	18	11'-4"	204'-0"	
A3	APRON	5	24	16'-8"	400'-0"	
A4	APRON	5	7	VARIES	114'-1"	VARIES* * 1 SER. OF 7 MIN: 10'-8" MAX: 21'-11"
A5	APRON	9	7	VARIES	114'-1"	VARIES* * 1 SER. OF 7 MIN: 10'-8" MAX: 21'-11"
A6	APRON	5	32	VARIES	221'-4"	VARIES* * 2 SER. OF 16 MIN: 5'-8" MAX: 8'-2"
A7	APRON	4	32	3'-0"	96'-0"	
A8	APRON	4	10	3'-4"	33'-4"	
C1	CUTOFF WALL	5	25	3'-7"	89'-7"	
C2	CUTOFF WALL	5	16	2'-10"	45'-4"	
C3	CUTOFF WALL	5	4	9'-6"	38'-0"	
C4	CUTOFF WALL	5	4	19'-3"	77'-0"	
F1	FOOTING	5	24	16'-6"	396'-0"	
F2	FOOTING	5	8	16'-6"	132'-0"	
F3	FOOTING	5	68	5'-6"	374'-0"	
F4	FOOTING	5	34	5'-6"	187'-0"	
F5	FOOTING	6	34	2'-8"	90'-8"	1'-8" / 1'-0"
F6	FOOTING	5	18	2'-6"	45'-0"	1'-8" / 10"
F7	FOOTING	5	68	3'-5"	232'-4"	2'-7" / 10"
F8	FOOTING	5	16	8'-6"	136'-0"	
F9	FOOTING	5	8	8'-6"	68'-0"	
F10	FOOTING	5	30	5'-6"	165'-0"	
F11	FOOTING	5	16	5'-6"	88'-0"	
F12	FOOTING	6	16	2'-8"	42'-8"	1'-8" / 1'-0"
F13	FOOTING	5	8	2'-6"	20'-0"	1'-8" / 10"
F14	FOOTING	5	40	3'-5"	136'-8"	2'-7" / 10"

BAR MARK	LOCATION	BAR SIZE	NUMBER OF BARS	LENGTH (FT/IN)	TOTAL LENGTH (FT/IN)	SKETCH
F15	FOOTING	5	4	VARIES	18'-8"	135°0'0" VARIES* / 2'-0" * 2 SER. OF 2 MIN: 2'-2" MAX: 3'-2"
F16	FOOTING	5	6	VARIES	28'-0"	135°0'0" VARIES* / 2'-0" * 2 SER. OF 3 MIN: 2'-2" MAX: 3'-2"
F17	FOOTING	5	12	VARIES	90'-4"	7'-9" 7'-1" 7'-9" * 4 SER. OF 3 AS SHOWN
F18	FOOTING	4	16	2'-4"	37'-4"	
F19	FOOTING	4	10	2'-4"	23'-4"	
F20	FOOTING	5	4	2'-0"	8'-0"	
F21	FOOTING	5	4	3'-6"	14'-0"	135°0'0" 1'-6" / 2'-0"
H1	HEADWALL	5	8	13'-6"	108'-0"	
H2	HEADWALL	5	60	2'-6"	150'-0"	1'-8" / 10"
W1	WINGWALL	6	34	VARIES	287'-7"	VARIES* * 2 SER. OF 17 MIN: 7'-7" MAX: 9'-4"
W2	WINGWALL	5	34	VARIES	290'-5"	VARIES* * 2 SER. OF 17 MIN: 7'-8" MAX: 9'-5"
W3	WINGWALL	5	40	16'-8"	666'-8"	
W4	WINGWALL	6	16	VARIES	130'-0"	VARIES* * 2 SER. OF 8 MIN: 6'-11" MAX: 9'-4"
W5	WINGWALL	5	16	VARIES	131'-4"	VARIES* * 2 SER. OF 8 MIN: 7'-0" MAX: 9'-5"
W6	WINGWALL	5	40	7'-8"	306'-8"	

190'-0" OF NUMBER 4 BARS AT 0.668 LBS/FT - 126.9 LBS
4981'-5" OF NUMBER 5 BARS AT 1.043 LBS/FT - 5195.6 LBS
550'-11" OF NUMBER 6 BARS AT 1.502 LBS/FT - 827.5 LBS
318'-1" OF NUMBER 9 BARS AT 3.400 LBS/FT - 1081.3 LBS

TOTAL REINFORCING STEEL WEIGHT - 7231.3 LBS

PROFESSIONAL ENGINEER
ELECTRONIC SEAL
No. 11462
DANIEL L. DORNAN
07/27/2010
ELECTRONIC SEAL
STATE OF UTAH

NOTES:

1. INCLUDE THE COST OF REBARS ON THIS SHEET IN THE COST OF "PRECAST CONCRETE BOX CULVERT"
2. THIS SHEET DOES NOT INCLUDE THE BOX CULVERT REGULAR REBARS. THE BOX CULVERT REGULAR REBARS ARE SPECIFIED AND DESIGNED BY MANUFACTURER BASED ON ASTM C 1433.
3. ALL BARS ARE EPOXY-COATED.
4. BAR SIZES ARE U.S. UNITS.
5. REINFORCING STEEL DIMENSIONS ARE OUT-TO-OUT OF BAR UNLESS OTHERWISE SPECIFIED.
6. SPLICES MAY BE OMITTED AT FABRICATOR'S OPTION, HOWEVER, IN SUCH CASE, FABRICATOR ASSUMES RESPONSIBILITY FOR FIT.

NO	DATE	REVISION	BY

DESIGN	AJB	08/09	DATE DJC 11/09
DRAWN	AJB	08/09	DATE DJC 11/09
CHECK	AJB	08/09	DATE DJC 11/09

APPROVAL RECOMM. 1/7/10 DATE
APPROVED BY DIRECTOR STRUCTURES DIVISION

UTAH DEPARTMENT OF TRANSPORTATION
STRUCTURES DIVISION

100 EAST; PROVIDENCE LANE TO 800 SOUTH
100 EAST OVER SPRING CREEK
REINFORCING STEEL SCHEDULE

PROJECT NUMBER F-LC05(36) PIN 6068

CACHE COUNTY

E-2823 ORG. NO.

SHT. 8 OF 8