| STATE | FEDERAL PROJECT NO. |
|---|---|
| N.J. | |

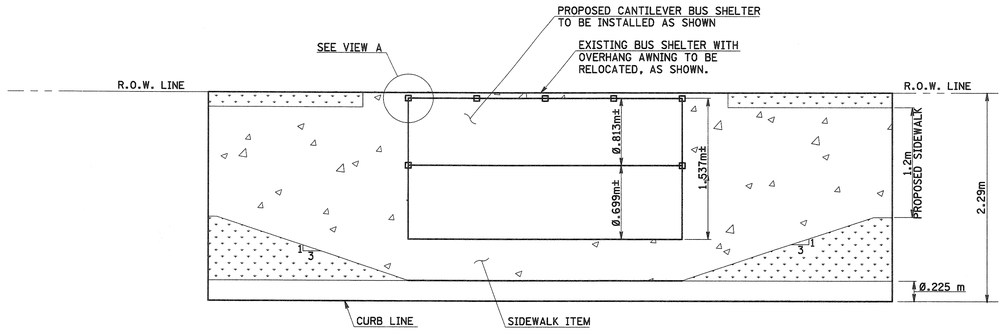


PLAN VIEW
N.T.S.

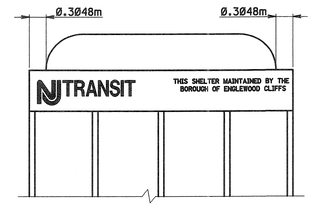


DECAL VIEW
N.T.S.

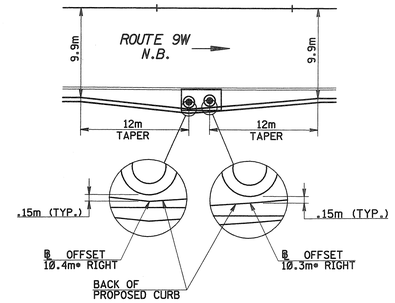


CURB DETAIL 'A'
STA. 2+110

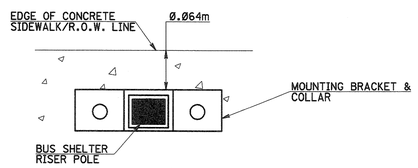


VIEW 'A'
N.T.S.

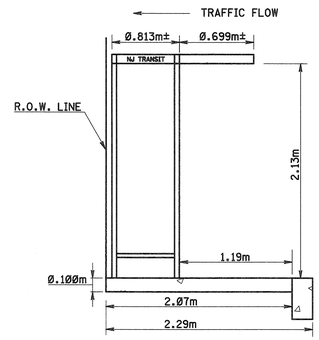


SECTION VIEW
N.T.S.

| LOCATION | WORK TO BE PERFORMED |
|---|---|
| 2+165 - RIGHT | EXISTING BUS SHELTER TO REMAIN |
| 2+450 - RIGHT | EXISTING BUS SHELTER TO REMAIN |
| 2+750 - LEFT | INSTALL NEW BUS SHELTER |
| 3+320 - LEFT | RELOCATE EXISTING BUS SHELTER |
| 3+340 - RIGHT | INSTALL NEW BUS SHELTER |
| 3+988 - LEFT | RELOCATE EXISTING BUS SHELTER |
| | |

BUS SHELTER DETAIL
N.T.S.

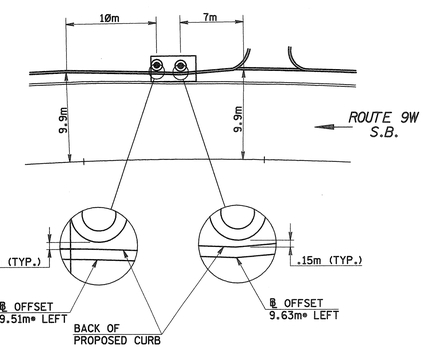


CURB DETAIL 'B'
STA. 3+770

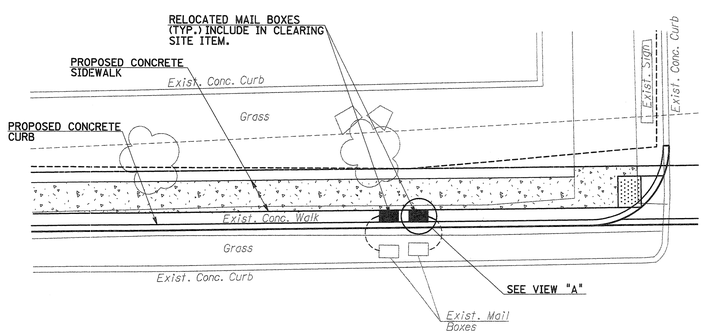


PLAN VIEW
N.T.S.

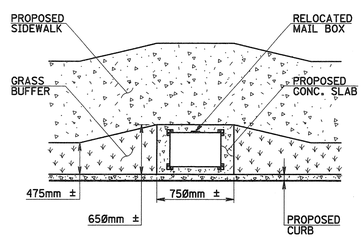


VIEW "A"
N.T.S.

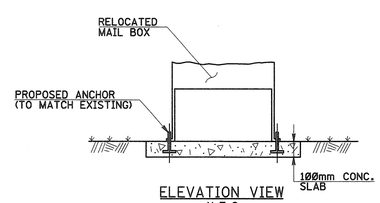


ELEVATION VIEW
N.T.S.

MAILBOX RELOCATION DETAIL
N.T.S.

FILE NAME: p:\1907\cadd\dgn\1907cd.dgn
DATE: 02 DEC 2002
USERNAME: ALiscian

PREPARED BY: G. MENZEL
REVIEWED BY: A. GHATTAS
DRAWN BY: A. LISCIANDRELLO

CD-1
CD-2

NEW JERSEY DEPARTMENT OF TRANSPORTATION

# CONSTRUCTION DETAILS

ROUTE 9W — SECTION 1J

LICHTENSTEIN CONSULTING ENGINEERS, INC.
RONALD GIAMARIO
N.J. P.E. LICENSE #31556

| STATE | FEDERAL PROJECT NO. |
|---|---|
| N.J. | |

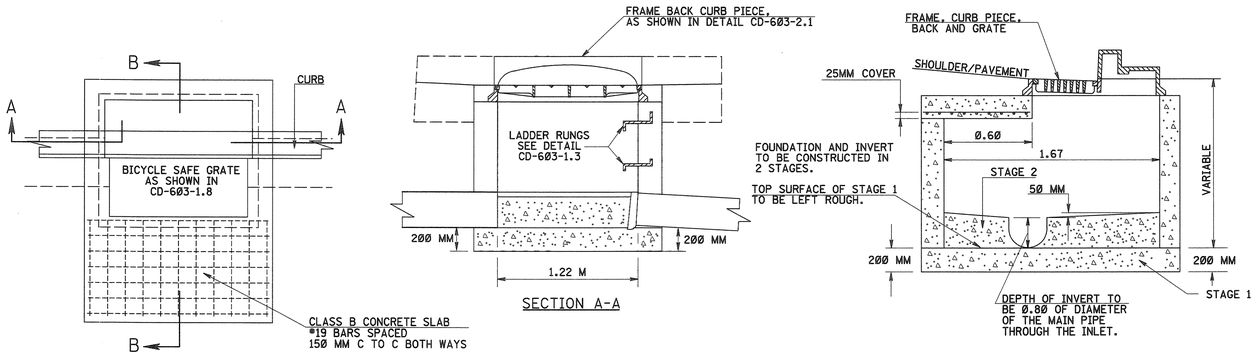


## INLETS, TYPE B SP1
## C.I. CURB PIECE-BACK-FRAME AND GRATE
N.T.S.

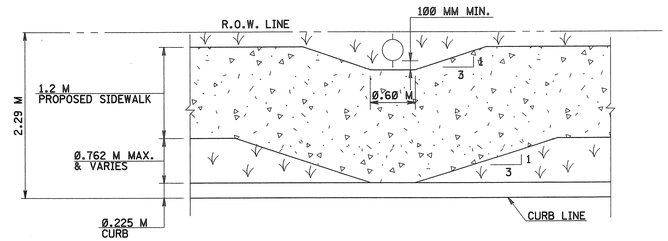


## UTILITY POLE DETAIL 'A'
N.T.S.

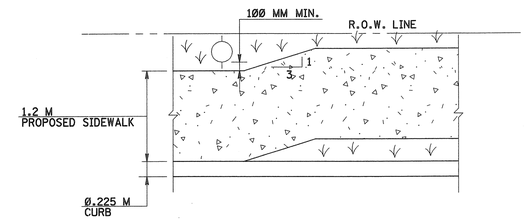


## UTILITY POLE DETAIL 'B'
N.T.S.

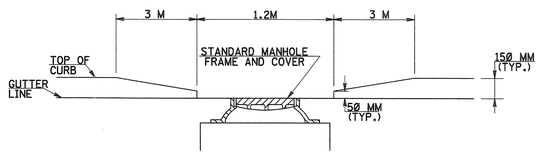


## METHOD OF DEPRESSING CURB AT MANHOLE
STA. 3+433 RIGHT
N.T.S.

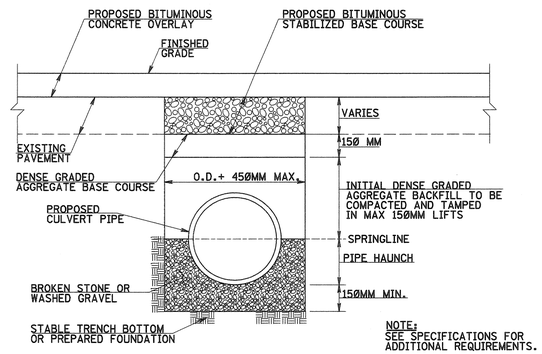


## STORM DRAIN
## PIPE BEDDING AND INITIAL BACKFILL DETAIL
N.T.S.

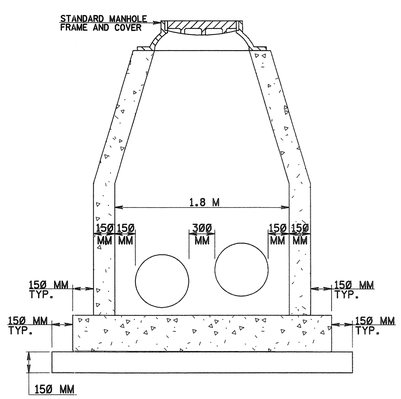


## 1.8 M DIAMETER MANHOLE
(WITH TWO PIPES IN ONE SIDE)
STA. 2+755 LEFT
STA. 3+487 LEFT
N.T.S.

NOTE: SEE STANDARD DETAILS FOR ADDITIONAL REQUIREMENTS.

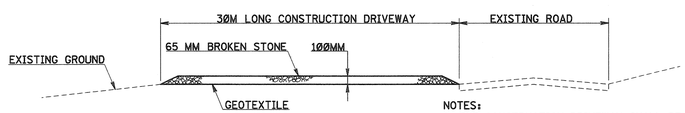


NOTES:
1. THE CONSTRUCTION DRIVEWAY SHALL BE MAINTAINED BY TOP DRESSING WITH ADDITIONAL STONE AND SHALL BE REMOVED WHEN NO LONGER REQUIRED.

## CONSTRUCTION DRIVEWAY
N.T.S.

FILE NAME: p:\1907\cadd\dgn\1907cd2.dgn
DATE: 02 DEC 2002
USERNAME: ALisciandrello

PREPARED BY: G. MENZEL
REVIEWED BY: A. GHATTAS
DRAWN BY: A. LISCIANDRELLO

CD-2 / CD-2

NEW JERSEY DEPARTMENT OF TRANSPORTATION

# CONSTRUCTION DETAILS

ROUTE 9W — SECTION 1J

LICHTENSTEIN CONSULTING ENGINEERS, INC.
RONALD GIAMARIO
N.J. P.E. LICENSE #31556