STATE	FEDERAL PROJECT NO.
N.J.	

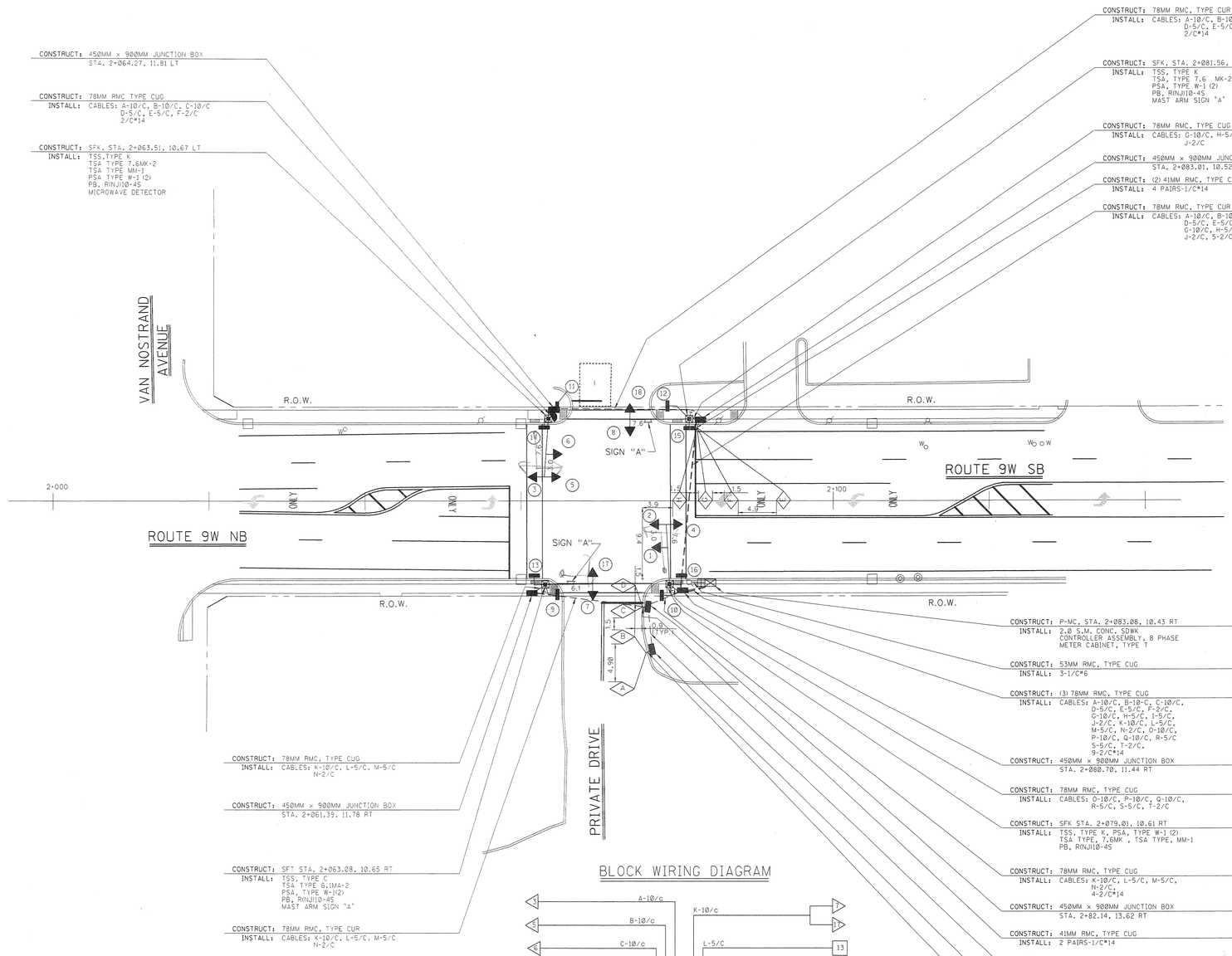

SIGN LEGEND

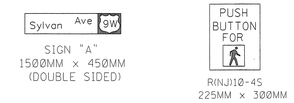

SIGNAL LEGEND

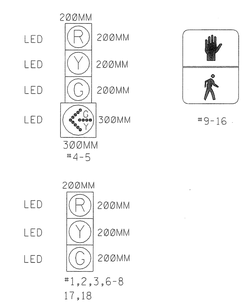

10 5 0 10 20
SCALE IN METERS

ALL DIMENSIONS IN METERS UNLESS OTHERWISE NOTED

BLOCK WIRING DIAGRAM

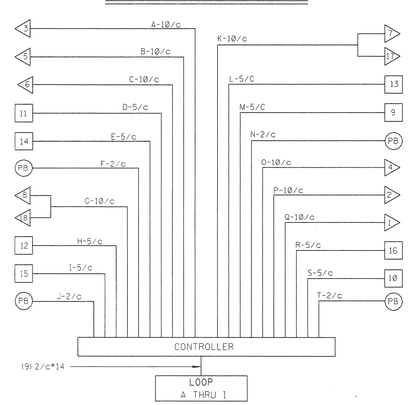

LOOP DETECTOR SCHEDULE

DETECTOR NO.	DETECTOR CHANNEL	LOOP	MODE	SIZE	NO. OF TURNS	µH
1	1	A	PRESENCE	1.8 by 3.1		
1	2	B	PRESENCE	1.8 by 3.1		
1	3	C	PRESENCE	1.8 by 3.1		
1	4	D	PRESENCE	1.8 by 3.1		
2	1	E	PRESENCE	1.8 by 2.3		
2	2	F	PRESENCE	1.8 by 2.3		
2	3	G	PRESENCE	1.8 by 2.3		
2	4	H	PRESENCE	1.8 by 2.3		
3	1	I	PRESENCE	4.0 by 5.5		

NUMBER OF TURNS DETERMINED IN THE FIELD.

REFERENCE

REVISION	DESCRIPTION	BY	CHECKED	DATE

NJDOT CADD DATA
ACCOUNT ELECTRICAL
DIRECTORY dr-ammon
DWG. NAME e:\@job96-11\dwg\final\PRIVATE.dgn
PLOT DATE 10-DEC-2002 12:56

E-1
E-11

NEW JERSEY DEPARTMENT OF TRANSPORTATION

ELECTRICAL PLANS

ROUTE 9W SECTION 1J

MUNICIPALITY BORO OF ENGLEWOOD CLIFFS COUNTY BERGEN

ROUTE 9W AND PRIVATE DRIVE

KSE
KS Engineers, P.C.
Engineers Surveyors Scientists Planners
Phone: (973) 533-2500 FAX: (973) 533-2505

ROBERT S. NASH
NJ PE 39395

CONTROL SECTION NO.

STATE	FEDERAL PROJECT NO.
N.J.	

TIMING SCHEDULE
VEHICLE ACTUATION

PHASE	SIGNAL INDICATIONS 1,2,3	4,5	6	7,8,17,18	9,10	11,12	13-16	TIME (SECONDS) I	II	III	IV
1. ROUTE 9W ROW SB LEAD	R	G/~~G~~	G	R	DW	W	DW	5-10	5-10	5-10	5-10
CHANGE	R	G/~~Y~~	G	R	DW	W	DW	4	4	4	4
2. ROUTE 9W ROW	G	G	G	R	W	W	DW	86-76	86-59	86-76	56-46
PEDESTRIAN CLEARANCE	G	G	G	R	FDW	FDW	DW	8	8	8	8
CHANGE	Y	Y	Y	R	DW	DW	DW	4	4	4	4
CLEARANCE	R	R	R	R	DW	DW	DW	2	2	2	2
3. PRIVATE DRIVE ROW	R	R	R	G	DW	DW	DW	5-10	5-27	5-10	5-10
CHANGE	R	R	R	Y	DW	DW	DW	4	4	4	4
CLEARANCE	R	R	R	R	DW	DW	DW	2	2	2	2

PEDESTRIAN ACTUATION

1. ROUTE 9W ROW SB LEAD	R	G/~~G~~	G	R	DW	W	DW	5-10	5-10	5-10	5-10
CHANGE	R	G/~~Y~~	G	R	DW	W	DW	4	4	4	4
2. ROUTE 9W ROW	G	G	G	R	W	W	DW	69-64	69-59	69-64	39-34
PEDESTRIAN CLEARANCE	G	G	G	R	FDW	FDW	DW	8	8	8	8
CHANGE	Y	Y	Y	R	DW	DW	DW	4	4	4	4
CLEARANCE	R	R	R	R	DW	DW	DW	2	2	2	2
3. PRIVATE DRIVE ROW	R	R	R	G	DW	DW	W	5	5	5	5
PEDESTRIAN CLEARANCE	R	R	R	G	DW	DW	FDW	17	17	17	17
VEHICLE EXTENSION	R	R	R	G	DW	DW	DW	0-0	0-5	0-0	0-0
CHANGE	R	R	R	Y	DW	DW	DW	4	4	4	4
CLEARANCE	R	R	R	R	DW	DW	DW	2	2	2	2
FLASHING OPERATION	Y	Y	Y	R	DARK	DARK	DARK				

TIMING PLAN

I - 6:30 AM - 9:00 AM, MON-FRI

II - 3:30 PM - 6:30 PM, MON-FRI,

III - 9:00 AM - 3:30 PM, MON-FRI
8:00 AM - 9:00 PM, SAT- SUN

IV - ALL OTHER TIMES

THE VEHICLE INTERVAL IS TO BE 2 SECONDS AND THE MEMORY IS TO BE OFF

THE MANUAL CONTROL IS TO BE DISCONNECTED.

THE SIGNAL IS TO REST IN PHASE 2. PHASE 1 MAY BE SKIPPED BUT IT CAN ONLY FOLLOW PHASE 3.

THE INTERSECTION IS THE BASE INTERSECTION FOR THE COORDINATION OF THE OTHER INTERSECTIONS.

PAY ITEM NO.	STD. ITEM NO.	TO BE CONSTRUCTED	CONTRACT QUANTITY
73	6G10C	CONCRETE SIDEWALK, 100MM THICK	2 S.M.
111	7A26C	41MM RIGID METALLIC CONDUIT, TYPE CUG	9 LM
112	7A31C	53MM RIGID METALLIC CONDUIT, TYPE CUG	3 LM
113	7A41C	78MM RIGID METALLIC CONDUIT, TYPE CUG	34 LM
115	7A66C	78MM RIGID METALLIC CONDUIT, TYPE CUR	56 LM
116	7A06F	SERVICE WIRE, No. 6 AWG	15 LM
117	7A21H	FOUNDATIONS, TYPE SFT	1 UNIT
118	7A36H	FOUNDATIONS, TYPE P-MC	1 UNIT
121	7A56H	FOUNDATIONS, TYPE SFK	3 UNITS
122	7A28J	445x775 MM JUNCTION BOXES	1 UNIT
123	7A29J	450x900 MM JUNCTION BOXES	5 UNITS
124	7B21C	LOOP DETECTOR	64 LM
125	7B31C	LOOP DETECTOR LEAD	57 LM
126	7B21D	CONTROLLER ASSEMBLIES, 8 PHASE	1 UNIT
127	7B21E	METER CABINETS, TYPE T	1 UNIT
131	7B21H	PEDESTRIAN SIGNAL ASSEMBLIES, TYPE W-1	8 UNITS
132	7B21I	PUSH BUTTON ASSEMBLIES	4 UNITS
135	7B22J	TRAFFIC SIGNAL ASSEMBLES, TYPE 6.1 MA-2	1 UNIT
137	7B27N	TRAFFIC SIGNAL ASSEMBLIES, TYPE 7.6 MK-2	3 UNITS
145	7B41O	TRAFFIC SIGNAL ASSEMBLIES, TYPE MM-1	2 UNITS
147	7B11P	TRAFFIC SIGNAL CABLE, 2 CONDUCTOR	283 LM
148	7B21P	TRAFFIC SIGNAL CABLE, 5 CONDUCTOR	218 LM
149	7B31P	TRAFFIC SIGNAL CABLE, 10 CONDUCTOR	211 LM
150	7B11Q	TRAFFIC SIGNAL STANDARDS, TYPE C	1 UNIT
153	7B41Q	TRAFFIC SIGNAL STANDARDS, TYPE K	3 UNITS
154	7B07R	TRAFFIC CONTROLLER ASSEMBLY TURN ON	1 UNIT
155	7B31S	INTERIM TRAFFIC SIGNAL SYSTEM, LOCATION NUMBER 1	LS
164	N7B01	MICROWAVE DETECTOR	1 UNIT

REFERENCE

REVISION	DESCRIPTION	BY	CHECKED	DATE

NJDOT CADD DATA
ACCOUNT ELECTRICAL
DIRECTORY dr-ahman
DWG. NAME e:\8job96-118\dwg\8-final\PRIVATE.dgn
PLOT DATE 10-DEC-2002 12:14

E-2
E-11

NEW JERSEY DEPARTMENT OF TRANSPORTATION

ELECTRICAL PLANS

ROUTE 9W SECTION 1J

MUNICIPALITY BORO OF ENGLEWOOD CLIFFS COUNTY BERGEN

ROUTE 9W AND PRIVATE DRIVE

KSE
KS Engineers, P.C.
Engineers-Surveyors-Construction Managers
Phone: (973) 623-2000 FAX: (973) 623-2000

ROBERT S. NASH
NJ PE 39395

CONTROL SECTION
NO.

49
138

STATE	FEDERAL PROJECT NO.
N.J.	

LOOP DETECTOR SCHEDULE

DETECTOR NO.	DETECTOR CHANNEL	LOOP	MODE	SIZE	No.OF TURNS	μH
1	1	A	PRESENCE	1.8 by 2.9		
1	2	B	PRESENCE	1.8 by 2.9		
1	3	C	PRESENCE	1.8 by 2.9		
1	4	D	PRESENCE	1.8 by 2.9		
2	1	E	PRESENCE	1.8 by 2.8		
2	2	F	PRESENCE	1.8 by 2.8		
2	3	G	PRESENCE	1.8 by 2.8		
2	4	H	PRESENCE	1.8 by 2.8		

NUMBER OF TURNS DETERMINED IN THE FIELD.

CONSTRUCT: (2) 41MM RMC TYPE, CUG
INSTALL: 4 PAIRS-1/C#14

CONSTRUCT: 445MMX775MM JUNCTION BOX
STA. 2+730.14, 19.36 LT

CONSTRUCT: 78MM RMC TYPE CUG
INSTALL: 4-2/C#14

CONSTRUCT: 450MMX900MM JUNCTION BOX
STA. 2+724.97, 11.41 LT

CONSTRUCT: 78MM RMC, TYPE CUG
INSTALL: CABLES: F-10/C, G-10/C, H-10/C, I-5/C, J-5/C, K-2/C

CONSTRUCT: SFK STA 2+722.45, 10.71 LT
INSTALL: TSS, TYPE K,
TSA, TYPE 7.6 MK-2
TSA, TYPE MM-1
PSA TYPE W-1(2)
PB, R(NJ)10-4S
MAST ARM SIGN "C"

CONSTRUCT: 78MM RMC, TYPE CUR
INSTALL: CABLES: A-10/C, B-10/C, C-5/C, D-5/C, E-2/C

CONSTRUCT: STF STA 2+747.28, 11.46 LT
INSTALL: TSS, TYPE S
TSA, TYPE 9.1 S-2
PSA, TYPE W-1(2)
PB, R(NJ)10-4S
MAST ARM SIGN "A"

CONSTRUCT: 78MM RMC, TYPE CUG
INSTALL: CABLES: A-10/C, B-10/C, C-5/C, D-5/C, E-2/C

CONSTRUCT: 450MMX900MM JUNCTION BOX
INSTALL: STA. 2+749.14, 11.40 LT

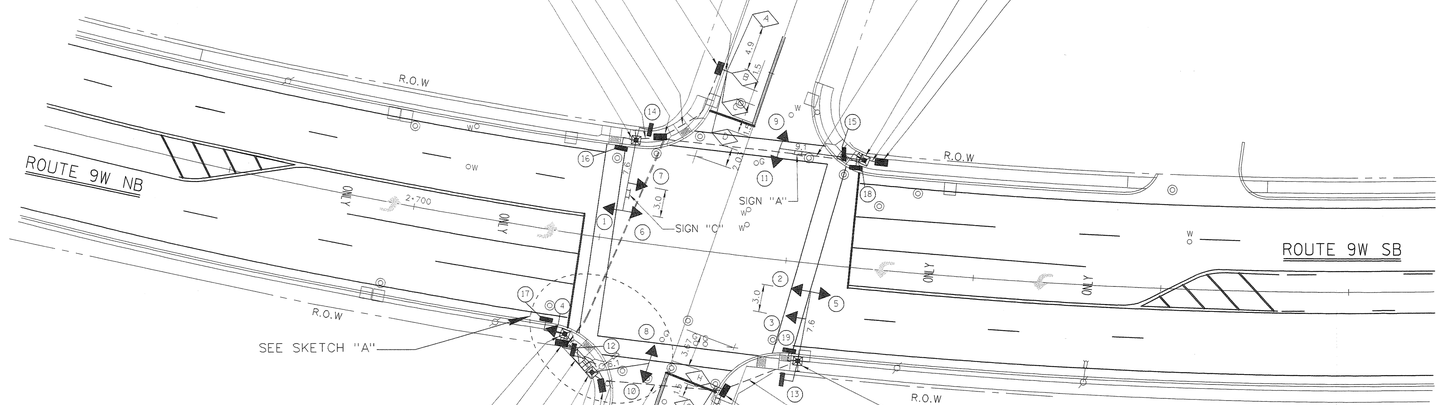

CONSTRUCT: SPF STA. 2+717.90, 10.87 RT
INSTALL: PA, TYPE P-1-W-2
PB, R(NJ)10-4S

CONSTRUCT: 450MM S 900MM JUNCTION BOX
STA. 2+717.70, 11.82 RT

CONSTRUCT: P-MC, STA. 2+719.61, 13.08 RT
INSTALL: 2.0 S.M, CONC SDWK
CONTROLLER ASSEMBLY, 8 PHASE
METER CABINET, TYPE T

CONSTRUCT: SFT STA. 2+721.29, 14.55 RT
INSTALL: TSS, TYPE C,
TSA, TYPE 6.1MA-2

CONSTRUCT: 450MM S 900MM JUNCTION BOX
STA. 2+722.47, 15.77 RT

CONSTRUCT: 78MM RMC, TYPE CUR
INSTALL: CABLES: P-10/C, Q-10/C, R-10/C S-5/C, T-5/C, U-2/C, 4-2/C#14

CONSTRUCT: SFK STA 2+742.40, 10.77 RT
INSTALL: TSS, TYPE K,
TSA, TYPE 7.6 MK-2
TSA, TYPE MM-1
PSA, TYPE W-1(2)
PB, R(NJ)10-4S

CONSTRUCT: 78MM RMC, TYPE CUG
INSTALL: CABLES: P-10/C, Q-10/C, R-10/C, S-5/C, T-5/C, U-2/C

CONSTRUCT: 450MMX900MM JUNCTION BOX
STA. 2+735.18, 14.64 RT

CONSTRUCT: 41MM RMC TYPE CUG
INSTALL: 2 PAIRS - 1/C#14

CONSTRUCT: 41MM RMC, TYPE CUG
INSTALL: 2-2/C#14

CONSTRUCT: 445MMX775MM JUNCTION BOX
STA. 2+733.95, 19.56 RT

CONSTRUCT: 41MM RMC TYPE CUG
INSTALL: 2 PAIRS - 1/C#14

BLOCK WIRING DIAGRAM

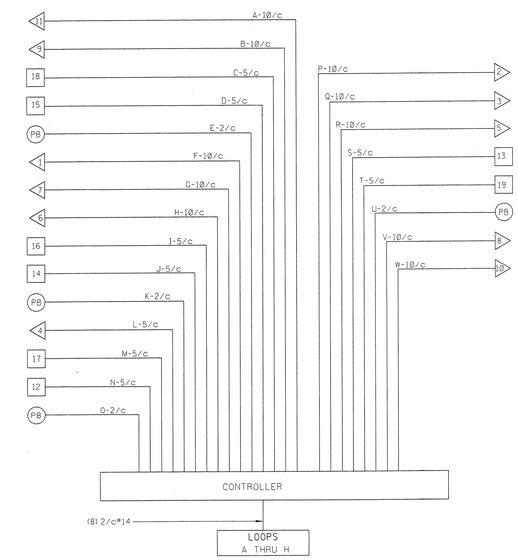

SIGN LEGEND

R(NJ)10-4S
225MM × 300MM

SIGN "A"
1500MM × 450MM
(DOUBLE SIDED)

SIGN "C"
1500MM × 450MM
(DOUBLE SIDED)

SIGNAL LEGEND

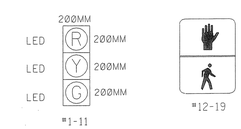

10 5 0 10 20
SCALE IN METERS

ALL DIMENSIONS IN METERS UNLESS OTHERWISE NOTED

E-3 / E-11

NEW JERSEY DEPARTMENT OF TRANSPORTATION

ELECTRICAL PLANS

ROUTE 9W SECTION 1J

MUNICIPALITY BORO OF ENGLEWOOD CLIFFS COUNTY BERGEN

ROUTE 9W AND CHARLOTTE PL

KSE
KS Engineers, P.C.
Engineers Surveyors, Construction Managers
Phone: (973) 533-0009 FAX: (973) 533-0660

ROBERT S. NASH
NJ PE 39395

CONTROL SECTION NO. 50 / 138

REVISION	DESCRIPTION	BY	CHECKED	DATE

NJDOT CADD DATA
ACCOUNT ELECTRICAL
DIRECTORY dr-ahman
DWG. NAME e:\job96-118\dwg\final\charlotte.dgn
PLOT DATE 10-DEC-2002 10:44

REFERENCE

STATE	FEDERAL PROJECT NO.
N.J.	

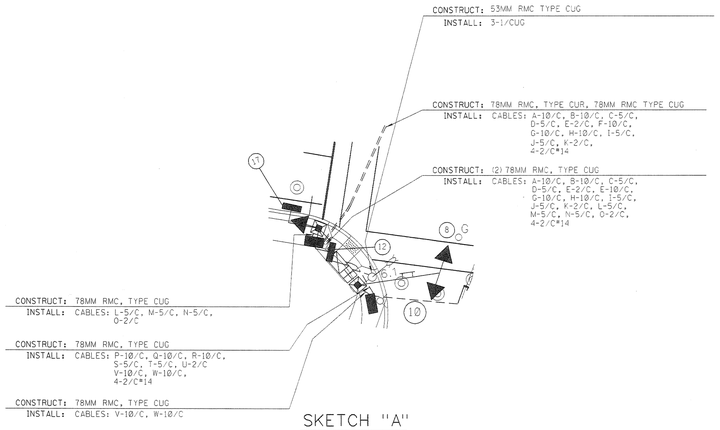

SKETCH "A"

(NOT TO SCALE)

TIMING SCHEDULE
VEHICLE ACTUATION

PHASE	SIGNAL INDICATIONS 1-7	8-11	12-15	16-19	TIME (SECONDS) I	II	III	IV
1. ROUTE 9W ROW	G	R	W	DW	90-65	90-68	90-70	60-40
PEDESTRIAN CLEARANCE	G	R	FDW	DW	13	13	13	13
CHANGE	Y	R	DW	DW	4	4	4	4
CLEARANCE	R	R	DW	DW	2	2	2	2
2. CHARLOTTE PLACE ROW	R	G	DW	DW	5-30	5-27	5-25	5-25
CHANGE	R	Y	DW	DW	4	4	4	4
CLEARANCE	R	R	DW	DW	2	2	2	2
PEDESTRIAN ACTUATION								
1. ROUTE 9W ROW	G	R	W	DW	74-65	74-68	74-70	44-40
PEDESTRIAN CLEARANCE	G	R	FDW	DW	13	13	13	13
CHANGE	Y	R	DW	DW	4	4	4	4
CLEARANCE	R	R	DW	DW	2	2	2	2
2. CHARLOTTE PLACE ROW	R	G	DW	W	5	5	5	5
PEDESTRIAN CLEARANCE	R	G	DW	FDW	16	16	16	16
VEHICLE EXTENSION	R	G	DW	DW	0-9	0-6	0-4	0-4
CHANGE	R	Y	DW	DW	4	4	4	4
CLEARANCE	R	R	DW	DW	2	2	2	2
FLASHING OPERATION	Y	R	DARK	DARK				

TIMING PLAN

I - 6:30 AM - 9:00 AM, MON-FRI

II - 3:30 PM - 6:30 PM, MON-FRI

III - 9:00 AM - 3:30 PM, MON-FRI
8:00 AM - 9:00 PM, SAT-SUN

IV - ALL OTHER TIMES

THE VEHICLE INTERVAL IS TO BE 2 SECONDS AND THE MEMORY IS TO BE OFF

THE MANUAL CONTROL IS TO BE DISCONNECTED.

THE SIGNAL IS TO REST IN PHASE 1.

THE FOLLOWING ARE THE OFFSETS MEASURED FROM THE BEGINING OF YELLOW OF ROUTE 9W AND PRIVATE DRIVE TO THE BEGINING OF YELLOW OF ROUTE 9W AT THIS INTERSECTION:

A. TIMING PLAN I - 45 SECONDS.

B. TIMING PLAN II - 42 SECONDS.

C. TIMINGPLAN III - 41 SECONDS.

D. TIMING PLAN IV - 41 SECONDS.

PAY ITEM NO.	STD. ITEM NO.	TO BE CONSTRUCTED	CONTRACT QUANTITY
73	6G10C	CONCRETE SIDEWALK, 100 MM THICK	2 S.M.
111	7A26C	41MM RIGID METALLIC CONDUIT, TYPE CUG	9 LM
112	7A31C	53MM RIGID METALLIC CONDUIT, TYPE CUG	2 LM
113	7A41C	78MM RIGID METALLIC CONDUIT, TYPE CUG	63 LM
115	7A66C	78MM RIGID METALLIC CONDUIT, TYPE CUR	59 LM
116	7A06F	SERVICE WIRE, No. 6 AWG	87 LM
117	7A21H	FOUNDATIONS, TYPE SFT	1 UNIT
118	7A36H	FOUNDATIONS, TYPE P-MC	1 UNIT
119	7A41H	FOUNDATIONS, TYPE SPF	1 UNIT
120	7A46H	FOUNDATIONS, TYPE STF	1 UNIT
121	7A56H	FOUNDATIONS, TYPE SFK	2 UNITS
122	7A28J	445x775MM JUNCTION BOXES	2 UNITS
123	7A29J	450x900MM JUNCTION BOXES	5 UNITS
124	7B21C	LOOP DETECTOR	64 LM
125	7B31C	LOOP DETECTOR LEAD	32 LM
126	7B21D	CONTROLLER ASSEMBLIES, 8 PHASE	1 UNIT
127	7B21E	METER CABINETS, TYPE T	1 UNIT
129	7B51F	PEDESTAL ASSEMBLIES, TYPE P-1-W-2	1 UNIT
131	7B21H	PEDESTRIAN SIGNAL ASSEMBLIES, TYPE W-1	6 UNITS
132	7B21I	PUSH BUTTON ASSEMBLIES	4 UNITS
135	7B22J	TRAFFIC SIGNAL ASSEMBLIES, TYPE 6.1 MA-2	1 UNIT
137	7B27N	TRAFFIC SIGNAL ASSEMBLIES, TYPE 7.6 MK-2	2 UNITS
139	7B42J	TRAFFIC SIGNAL ASSEMBLIES, TYPE 9.1 S-2	1 UNIT
144	7B31O	TRAFFIC SIGNAL ASSEMBLIES, TYPE C-1	1 UNIT
145	7B41Q	TRAFFIC SIGNAL ASSEMBLIES, TYPE MM-1	2 UNITS
147	7B11P	TRAFFIC SIGNAL CABLE, 2 CONDUCTOR	454 LM
148	7B21P	TRAFFIC SIGNAL CABLE, 5 CONDUCTOR	325 LM
149	7B31P	TRAFFIC SIGNAL CABLE, 10 CONDUCTOR	334 LM
150	7B11Q	TRAFFIC SIGNAL STANDARDS, TYPE C	1 UNIT
152	7B31Q	TRAFFIC SIGNAL STANDARDS, TYPE S	1 UNIT
153	7B41Q	TRAFFIC SIGNAL STANDARDS, TYPE K	2 UNITS
154	7B07R	TRAFFIC CONTROLLER ASSEMBLY TURN ON	1 UNIT
156	7B32S	INTERIM TRAFFIC SIGNAL SYSTEM, LOCATION NUMBER 2	LS

REFERENCE

REVISION	DESCRIPTION	BY	CHECKED	DATE

NJDOT CADD DATA
ACCOUNT ELECTRICAL
DIRECTORY drgrnman
DWG. NAME e:\job96-118\dwg\final\charlotte.dgn
PLOT DATE 10-DEC-2002 10:51

E-4 / E-11

NEW JERSEY DEPARTMENT OF TRANSPORTATION

ELECTRICAL PLANS

ROUTE 9W SECTION 1J

MUNICIPALITY BORO OF ENGLEWOO OF CLIFFS COUNTY BERGEN

ROUTE 9W AND CHARLOTTE PL

KSE
KS Engineers, P.C.
Engineers Surveyors Construction Managers
Phone: (973) 623-0999 FAX: (973) 623-0998

ROBERT S. NASH
NJ PE 39395

CONTROL SECTION
NO.

51
138

STATE	FEDERAL PROJECT NO.
N.J.	

CONSTRUCT: 41MM RMC TYPE CUG
INSTALL: 1 PAIR - 1/C*14

CONSTRUCT: 445x775MM JUNCTION BOX
STA 3+376.18, 26.43 LT

CONSTRUCT: 41MM RMC TYPE CUG
INSTALL: 1-2/C*14

CONSTRUCT: (2) 41MM RMC, TYPE CUG
INSTALL: 3 PAIRS 1/C*14

CONSTRUCT: 445x775MM JUNCTION BOX
STA 3+612.62, 19.43 LT

CONSTRUCT: 78MM RMC, TYPE CUG
INSTALL: 4-2/C*14

CONSTRUCT: SPF STA 3+370, 14.0 LT
INSTALL: PA, TYPE PW-1

CONSTRUCT: 78MM RMC, TYPE CUG
INSTALL: F-5/C*14

CONSTRUCT: 450x900MM JUNCTION BOX
STA 3+366.02, 12.32 LT

CONSTRUCT: 78MM RMC, TYPE CUG
INSTALL: CABLES: A-10/C, B-10/C, C-10/C,
D-5/C, E-2/C

CONSTRUCT: 450x900MM JUNCTION BOX
STA 3+354.03, 10.81 LT

CONSTRUCT: SFK, STA 3+353, 10.0 LT
INSTALL: TSS, TYPE K
TSA, TYPE 7.6 MK-2
TSA, TYPE MM-1
PSA, TYPE W-1,
PB, R(NJ)10-4S
MAST ARM SIGN "E"

CONSTRUCT: 78MM RMC, TYPE CUR
INSTALL: CABLES: A-10/C, B-10/C, C-10/C
D-5/C, E-2/C, F-5/C,
4-2/C*14

CONSTRUCT: STF STA 3+389, 13.0 LT
INSTALL: TSS, TYPE S
TSA, TYPE 10.7S-2
PSA, TYPE W-1(2)
PB, R(NJ)10-4S
MAST ARM SIGN "A"

CONSTRUCT: 78MM RMC, TYPE CUG
INSTALL: CABLES: G-10/C, H-10/C, I-5/C
J-5/C, K-2/C

CONSTRUCT: 450x900MM JUNCTION BOX
STA 3+390.90, 11.22 LT

CONSTRUCT: 78MM RMC, TYPE CUG
INSTALL: CABLES: L-10/C, M-10/C, N-5/C

CONSTRUCT: SPF, STA 3+399, 10.0 LT
INSTALL: PA, TYPE P-1

CONSTRUCT: 78MM RMC, TYPE CUG
INSTALL: N-5/C*14,

CONSTRUCT: 450x900MM JUNCTION BOX
STA 3+400.92, 11.78 LT

CONSTRUCT: 78MM RMC, TYPE CUG
INSTALL: CABLES: L-10/C, M-10/C

CONSTRUCT: SFK, STA 3+430.15, 10.65 LT
INSTALL: TSS, TYPE K
TSA, TYPE MM-1
TSA, TYPE 7.6 MK-1
MAST ARM SIGN G
MAST ARM BLANKOUT SIGN

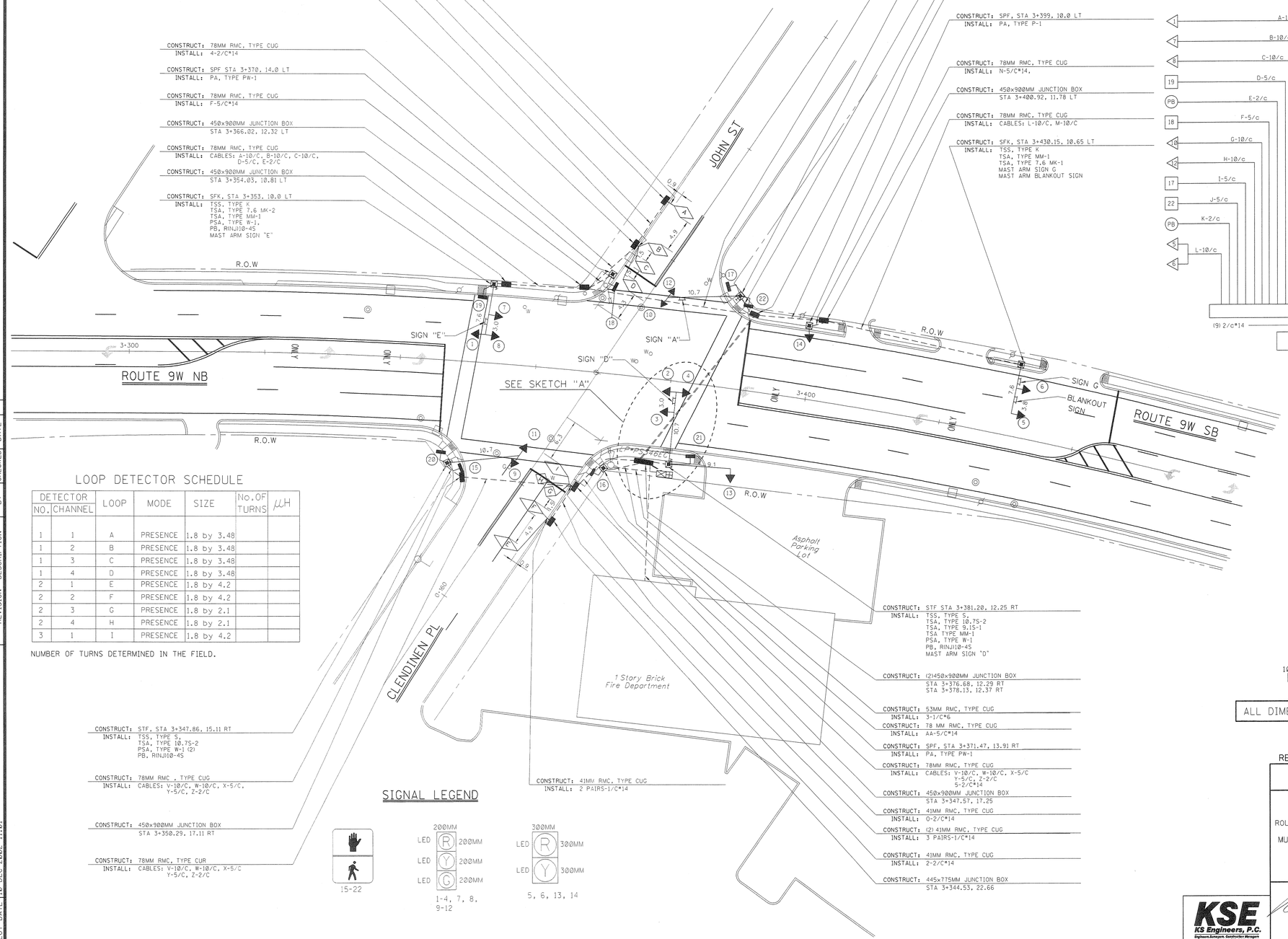

CONSTRUCT: STF STA 3+381.20, 12.25 RT
INSTALL: TSS, TYPE S,
TSA, TYPE 10.7S-2
TSA, TYPE 9.15-1
TSA TYPE MM-1
PSA, TYPE W-1
PB, R(NJ)10-4S
MAST ARM SIGN "D"

CONSTRUCT: (2)450x900MM JUNCTION BOX
STA 3+376.68, 12.29 RT
STA 3+378.13, 12.37 RT

CONSTRUCT: 53MM RMC, TYPE CUG
INSTALL: 3-1/C*6

CONSTRUCT: 78 MM RMC, TYPE CUG
INSTALL: AA-5/C*14

CONSTRUCT: SPF, STA 3+371.47, 13.91 RT
INSTALL: PA, TYPE PW-1

CONSTRUCT: 78MM RMC, TYPE CUG
INSTALL: CABLES: V-10/C, W-10/C, X-5/C
Y-5/C, Z-2/C
5-2/C*14

CONSTRUCT: 450x900MM JUNCTION BOX
STA 3+347.57, 17.25

CONSTRUCT: 41MM RMC, TYPE CUG
INSTALL: 0-2/C*14

CONSTRUCT: (2) 41MM RMC, TYPE CUG
INSTALL: 3 PAIRS-1/C*14

CONSTRUCT: 41MM RMC, TYPE CUG
INSTALL: 2-2/C*14

CONSTRUCT: 445x775MM JUNCTION BOX
STA 3+344.53, 22.66

CONSTRUCT: STF, STA 3+347.86, 15.11 RT
INSTALL: TSS, TYPE S,
TSA, TYPE 10.7S-2
PSA, TYPE W-1 (2)
PB, R(NJ)10-4S

CONSTRUCT: 78MM RMC , TYPE CUG
INSTALL: CABLES: V-10/C, W-10/C, X-5/C,
Y-5/C, Z-2/C

CONSTRUCT: 450x900MM JUNCTION BOX
STA 3+350.29, 17.11 RT

CONSTRUCT: 78MM RMC, TYPE CUR
INSTALL: CABLES: V-10/C, W-10/C, X-5/C
Y-5/C, Z-2/C

CONSTRUCT: 41MM RMC, TYPE CUG
INSTALL: 2 PAIRS-1/C*14

LOOP DETECTOR SCHEDULE

DETECTOR NO.	DETECTOR CHANNEL	LOOP	MODE	SIZE	No.OF TURNS	μH
1	1	A	PRESENCE	1.8 by 3.48		
1	2	B	PRESENCE	1.8 by 3.48		
1	3	C	PRESENCE	1.8 by 3.48		
1	4	D	PRESENCE	1.8 by 3.48		
2	1	E	PRESENCE	1.8 by 4.2		
2	2	F	PRESENCE	1.8 by 4.2		
2	3	G	PRESENCE	1.8 by 2.1		
2	4	H	PRESENCE	1.8 by 2.1		
3	1	I	PRESENCE	1.8 by 4.2		

NUMBER OF TURNS DETERMINED IN THE FIELD.

SIGNAL LEGEND

BLOCK WIRING DIAGRAM

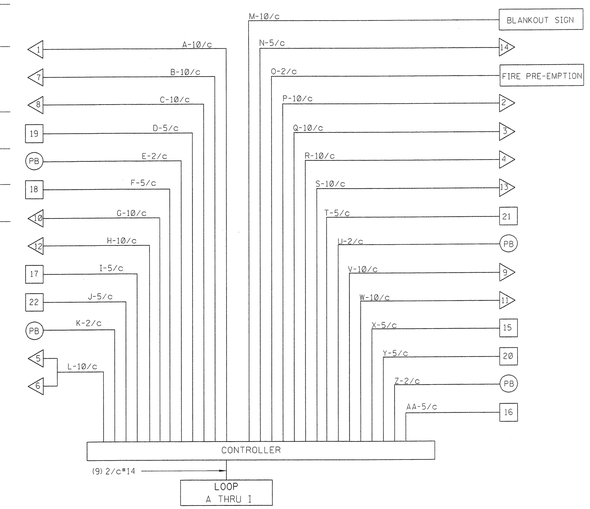

SIGN LEGEND

R10-11b NO TURN ON RED 600MM x 600MM

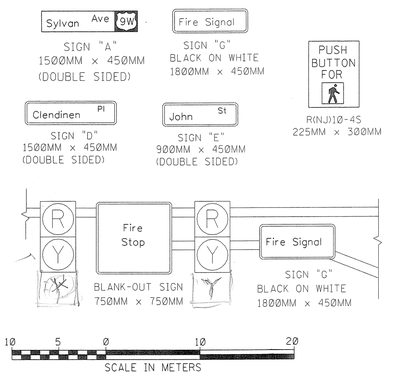

10 5 0 10 20
SCALE IN METERS

ALL DIMENSIONS IN METERS UNLESS OTHERWISE NOTED

REGION NO. E-5 / E-11

NEW JERSEY DEPARTMENT OF TRANSPORTATION

ELECTRICAL PLANS

ROUTE 9W SECTION 1J

MUNICIPALITY BORO OF ENGLEWOOD CLIFFS COUNTY BERGEN

ROUTE 9W AND CLENDINEN PL AND JOHN STREET

KSE
KS Engineers, P.C.
Engineers, Surveyors, Construction Managers
Phone: (973) 575-0008 FAX: (973) 575-2860

ROBERT S. NASH
NJ PE 39395

CONTROL SECTION NO. 52 / 138

REVISION	DESCRIPTION	BY	CHECKED	DATE

N.JDOT CADD DATA
ACCOUNT ELECTRICAL
DIRECTORY dr.ohman
DWG. NAME e:\j0596-118\dwg\final\john.dgn
PLOT DATE 10-DEC-2002 11:01

REFERENCE

STATE	FEDERAL PROJECT NO.
N.J.	

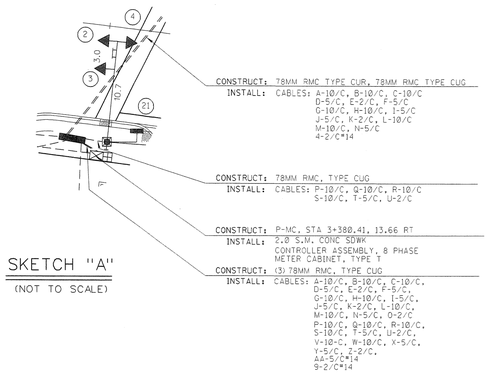

SKETCH "A"

(NOT TO SCALE)

PAY ITEM NO.	STD. ITEM NO.	TO BE CONSTRUCTED	CONTRACT QUANTITY
73	6G10C	CONCRETE SIDEWALK, 100 MM THICK	2 S.M.
111	7A26C	41MM RIGID METALLIC CONDUIT, TYPE CUG	37 LM
112	7A31C	53MM RIGID METALLIC CONDUIT, TYPE CUG	7 LM
113	7A41C	78MM RIGID METALLIC CONDUIT, TYPE CUG	105 LM
115	7A66C	78MM RIGID METALLIC CONDUIT, TYPE CUR	71 LM
116	7A06F	SERVICE WIRE, No. 6 AWG	27 LM
118	7A36H	FOUNDATIONS, TYPE P-MC	1 UNIT
119	7A41H	FOUNDATIONS, TYPE SPF	3 UNITS
120	7A46H	FOUNDATIONS, TYPE STF	3 UNITS
121	7A56H	FOUNDATIONS, TYPE SFK	2 UNITS
122	7A28J	445X775 MM JUNCTION BOXES	3 UNITS
123	7A29J	450X900 MM JUNCTION BOXES	8 UNITS
124	7B21C	LOOP DETECTOR	72 LM
125	7B31C	LOOP DETECTOR LEAD	30 LM
126	7B21D	CONTROLLER ASSEMBLIES, 8 PHASE	1 UNIT
127	7B21E	METER CABINETS, TYPE T	1 UNIT
128	7B31F	PEDESTAL ASSEMBLIES, TYPE P-1	1 UNIT
130	7B60F	PEDESTAL ASSEMBLIES, TYPE PW-1	2 UNITS
131	7B21H	PEDESTRIAN SIGNAL ASSEMBLIES, TYPE W-1	6 UNITS
132	7B21I	PUSH BUTTON ASSEMBLIES	4 UNITS
136	7B26N	TRAFFIC SIGNAL ASSEMBLIES, TYPE 7.6 MK-1	1 UNIT
137	7B27N	TRAFFIC SIGNAL ASSEMBLIES, TYPE 7.6 MK-2	1 UNIT
138	7B41J	TRAFFIC SIGNAL ASSEMBLIES, TYPE 9.1S-1	1 UNIT
140	7B52J	TRAFFIC SIGNAL ASSEMBLIES, TYPE 10.7S-2	3 UNITS
145	7B41O	TRAFFIC SIGNAL ASSEMBLIES, TYPE MM-1	3 UNITS
147	7B11P	TRAFFIC SIGNAL CABLE, 2 CONDUCTOR	624 LM
148	7B21P	TRAFFIC SIGNAL CABLE, 5 CONDUCTOR	385 LM
149	7B31P	TRAFFIC SIGNAL CABLE, 10 CONDUCTOR	574 LM
152	7B31Q	TRAFFIC SIGNAL STANDARDS, TYPE S	3 UNITS
153	7B41Q	TRAFFIC SIGNAL STANDARDS, TYPE K	2 UNITS
154	7B07R	TRAFFIC CONTROLLER ASSEMBLY TURN ON	1 UNIT
162	7B33S	INTERIM TRAFFIC SIGNAL SYSTEM, LOCATION NUMBER 3	LS

TIMING SCHEDULE

VEHICLE ACTUATION

PHASE	SIGNAL INDICATIONS 1,2,3	4,7,8	5,6	FIRE STOP BLANK-OUT SIGN	9,10,11,12	13,14	15,16, 17,18	19,20,21,22	TIME (SECONDS) I	II	III	IV
1. ROUTE 9W ROW	G	G	OFF	OFF	R	R	W	DW	87-60	87-57	87-67	57-37
PEDESTRIAN CLEARANCE	G	G	OFF	OFF	R	R	FDW	DW	16	16	16	16
CHANGE	Y	Y	OFF	OFF	R	R	DW	DW	4	4	4	4
CLEARANCE	R	R	OFF	OFF	R	R	DW	DW	2	2	2	2
2. JOHN ST./CLENDINEN PL. ROW	R	R	OFF	OFF	G	R	DW	DW	5-32	5-35	5-25	5-25
CHANGE	R	R	OFF	OFF	Y	R	DW	DW	4	4	4	4
CLEARANCE	R	R	OFF	OFF	R	R	DW	DW	2	2	2	2

PEDESTRIAN ACTUATION

	1,2,3	4,7,8	5,6	FIRE STOP BLANK-OUT SIGN	9,10,11,12	13,14	15,16, 17,18	19,20,21,22	I	II	III	IV
1. ROUTE 9W ROW	G	G	OFF	OFF	R	R	W	DW	87-60	87-57	87-67	57-37
PEDESTRIAN CLEARANCE	G	G	OFF	OFF	R	R	FDW	DW	16	16	16	16
CHANGE	Y	Y	OFF	OFF	R	R	DW	DW	4	4	4	4
CLEARANCE	R	R	OFF	OFF	R	R	DW	DW	2	2	2	2
2. JOHN ST./CLENDINEN PL. ROW	R	R	OFF	OFF	G	R	DW	W	5	5	5	5
PEDESTRIAN CLEARANCE	R	R	OFF	OFF	G	R	DW	FDW	16	16	16	16
VEHICLE EXTENSION	R	R	OFF	OFF	G	R	DW	DW	Ø-11	Ø-14	Ø-4	Ø-4
CHANGE	R	R	OFF	OFF	R	R	DW	DW	4	4	4	4
CLEARANCE	R	R	OFF	OFF	R	R	DW	DW	2	2	2	2
FLASHING OPERATION	Y	Y	OFF	OFF	R	R	DARK	DARK				

TIMING PLAN

I - 6:30 AM - 9:00 AM, MON-FRI

II - 3:30 PM - 6:30 PM, MON-FRI

III - 9:00 AM - 3:30 PM, MON-FRI
8:00 AM - 9:00 PM SAT - SUN

IV - ALL OTHER TIMES

THE VEHICLE INTERVAL IS TO BE 2 SECONDS AND THE MEMORY IS TO BE OFF

THE MANUAL CONTROL IS TO BE DISCONNECTED.

THE FOLLOWING ARE THE OFFSETS MEASURED FROM THE BEGINING OF YELLOW OF ROUTE 9W AND PRIVATE DRIVE TO THE BEGINING OF YELLOW OF ROUTE 9W AT THIS INTERSECTION:

A. TIMING PLAN I - 116 SECONDS .

B. TIMING PLAN II - 78 SECONDS.

C. TIMING PLAN III - 102 SECONDS.

D. TIMING PLAN IV - 91 SECONDS.

10 5 Ø 10 20
SCALE IN METERS

ALL DIMENSIONS IN METERS UNLESS OTHERWISE NOTED

E-6 / E-11

NEW JERSEY DEPARTMENT OF TRANSPORTATION

ELECTRICAL PLANS

ROUTE 9W SECTION 1J

MUNICIPALITY BORO OF ENGLEWOOD CLIFFS COUNTY BERGEN

ROUTE 9W CLINDINEN PL & JOHN STREET

KSE
KS Engineers, P.C.
Highway Architects, Construction Managers
Phone: (973) 623-2800 FAX: (973) 623-2800

ROBERT S. NASH
NJ PE 39395

CONTROL SECTION NO.

53 / 138

REFERENCE

NJDOT CADD DATA
ACCOUNT ELECTRICAL
DIRECTORY dr-ahman
DWG. NAME e:\8job96-118\dwg\8final\8john.dgn
PLOT DATE 10-DEC-2002 11:07

REVISION	DESCRIPTION	BY	CHECKED	DATE

STATE	FEDERAL PROJECT NO.
N.J.	

FIRE PRE-EMPTION SEQUENCE

SIGNAL INDICATIONS

ROW TO ROUTE 9W

PHASE	1,2,3	4,7,8	5,6	FIRE STOP BLANK-OUT SIGN	9,10,11,12	13,14	15,16, 17,18	19,20,21,22	TIME (SECONDS)
ROUTE 9W ROW	G	G	OFF	OFF	R	R	W	DW	10 SECONDS MIN.
UPON ACTUATION OF FIRE CONTROL BUTTON									
ROUTE 9W ROW	G	G	OFF	OFF	R	R	W	DW	10 SECONDS MIN.
ROUTE 9W NB CHANGE	Y	G	OFF	OFF	R	R	FDW	DW	4
ROUTE 9W NB CLEARANCE	R	G	OFF	OFF	R	R	FDW	DW	2
ROUTE 9W ON	R	G	FY	OFF	R	R	FDW	DW	10
CHANGE	R	G	Y	OFF	R	R	DW	DW	4
CLEARANCE	R	G	R	OFF	R	R	DW	DW	2
FIRE ROW	R	G	R	ON	R	FY	DW	DW	20
FIRE CHANGE	R	G	R	ON	R	Y	DW	DW	4
FIRE CLEARANCE	R	G	R	ON	R	R	DW	DW	3
ROUTE 9W ROW	G	G	OFF	OFF	R	R	DW	DW	10 SECONDS MIN.

RESUME NORMAL OPERATION

ROW TO CLENDINEN PL/JOHN STREET *

CLENDINEN PL/JOHN ST. ROW	R	R	OFF	OFF	G	R	DW	DW	7 SECONDS MIN.
UPON ACTUATION OF FIRE CONTROL BUTTON									
CLENDINEN PL/JOHN ST. ROW	R	R	OFF	OFF	G	R	DW	DW	7 SECONDS MIN.
CHANGE	R	R	OFF	OFF	Y	R	DW	DW	4
NB CLEARANCE	R	R	OFF	OFF	R	R	DW	DW	2
ROUTE 9W ON	R	G	FY	OFF	R	R	DW	DW	10
CHANGE	R	G	Y	OFF	R	R	DW	DW	4
CLEARANCE	R	G	R	OFF	R	R	DW	DW	2
FIRE ROW	R	G	R	ON	R	FY	DW	DW	20
FIRE CHANGE	R	G	R	ON	R	Y	DW	DW	4
FIRE CLEARANCE	R	G	R	ON	R	R	DW	DW	3
ROUTE 9W ROW	G	G	OFF	OFF	R	R	DW	DW	10 SECONDS MIN.

RESUME NORMAL OPERATION

* IF ACTUATION OCCURS DURING PEDESTRIAN SEQUENCE, THE PEDESTRIAN "WALK", PEDESTRIAN CLEARANCE, AND VEHICULAR CHANGE AND CLEARANCE INTERVALS SHALL BE PROVIDED BEFORE FIRE ROW.

REFERENCE

REVISION	DESCRIPTION	BY	CHECKED	DATE

NJDOT CADD DATA
ACCOUNT ELECTRICAL
DIRECTORY dr-ammon
DWG. NAME es8job96-118dwg8final8john.dgn
PLOT DATE 10-DEC-2002 11:29

KSE
KS Engineers, P.C.
Engineers, Surveyors, Geologists & Planners
Phone: (973) 622-0404 FAX: (973) 622-0404

ROBERT S. NASH
NJ PE 39395

CONTROL SECTION NO.

54
138

E-7
E-11

NEW JERSEY DEPARTMENT OF TRANSPORTATION

ELECTRICAL PLANS

ROUTE 9W SECTION 1J

MUNICIPALITY BORO OF ENGLEWOOD CLIFFS COUNTY BERGEN

ROUTE 9W CLENDINEN PL & JOHN STREET

STATE	FEDERAL PROJECT NO.
N.J.	

BLOCK WIRING DIAGRAM

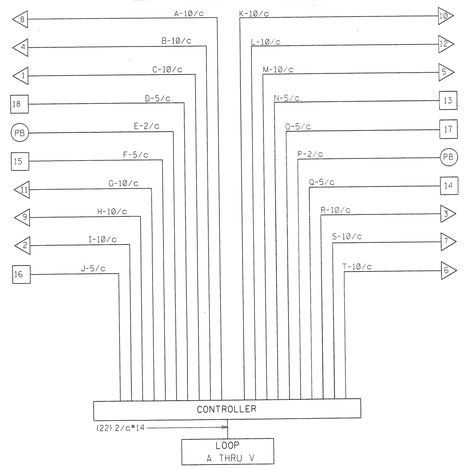

CONSTRUCT: 78MM RMC, TYPE CUR
INSTALL: CABLES: A-10/C, B-10/C, C-10/C D-5/C, E-2/C, F-5/C, 5-2/C*14

CONSTRUCT: (3) 41MM RMC , TYPE CUG
INSTALL: 5 PAIRS-1/C*14

CONSTRUCT: 445x775MM JUNCTION BOX
STA. 3+583.95, 19.35 LT

CONSTRUCT: 78MM RMC, TYPE CUG
INSTALL: 5-2/C*14

CONSTRUCT: 450X900MM JUNCTION BOX
STA. 3+578.86, 15.08 LT

CONSTRUCT: 78MM RMC, TYPE CUG
INSTALL: F-5/C*14

CONSTRUCT: SPF STA. 3+579.55, 13.69 LT
INSTALL: PA, TYPE PW-1

CONSTRUCT: 78MM RMC, TYPE CUG
INSTALL: CABLES: A-10/C, B-10/C, C-10/C D-5/C, E-2/C

CONSTRUCT: SFK STA. 3+572.56, 10.71 LT
INSTALL: TSS, TYPE K
TSA, TYPE 7.6MK-2
TSA TYPE MM-1
PSA, TYPE W-1
PB, R(NJ)10-4S
MAST ARM SIGN "F"

CONSTRUCT: P-MC, STA. 3+604.82, 19.63 LT
INSTALL: 2 S.M. CONC. SDWK.
CONTROLLER ASSEMBLY, 8 PHASE
METER CABINET, TYPE T

CONSTRUCT: (4) 78MM RMC, TYPE CUG
INSTALL: CABLES: A-10/C, B-10/C, C-10/C, D-5/C, E-2/C, F-5/C, G-10/C, H-10/C, I-10/C, J-5/C, K-10/C, L-10/C, M-10/C, N-5/C, O-5/C, P-2/C, Q-5/C, R-10/C, S-10/C, T-10/C, 22-2/C*14

CONSTRUCT: (2) 450X900MM JUNCTION BOX
STA. 3+604.69, 17.6 LT
STA. 3+603.62, 18.20 LT

CONSTRUCT: 78MM RMC, TYPE-CUG
INSTALL: CABLES: G-10/C, H-10/C, I-10/C, J-5/C

CONSTRUCT: STF STA. 3+605.76, 14.25 LT
INSTALL: TSS, TYPE S
TSA, TYPE 12.2 S-2
TSA, TYPE C-1
PSA, TYPE W-1
PB, R(NJ)10-4S
MAST ARM SIGN "A"

CONSTRUCT: (4) 41MM RMC , TYPE CUG
INSTALL: 7-2/C*14

CONSTRUCT: 445x775MM JUNCTION BOX
STA. 3+607.50, 11.10 LT

CONSTRUCT: 53MM RMC,TYPE CUG
INSTALL: 3-1/C*6

CONSTRUCT: 41MM RMC, TYPE CUG
INSTALL: 7 PAIRS-1/C*14

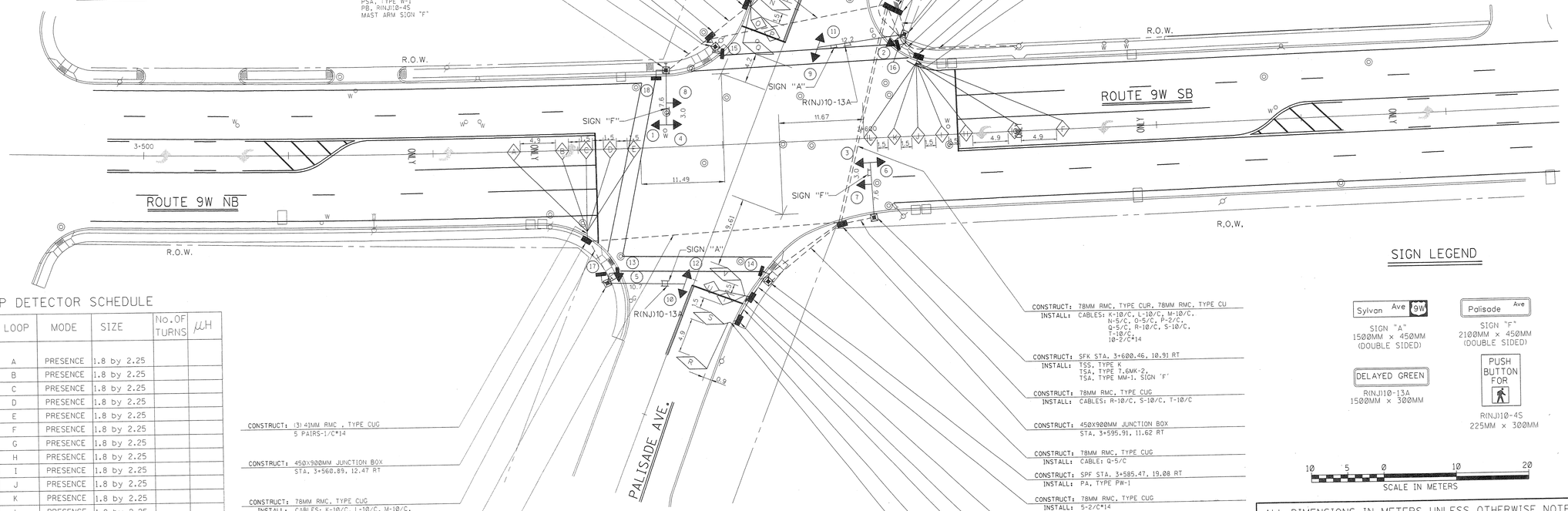

CONSTRUCT: (3) 41MM RMC , TYPE CUG
5 PAIRS-1/C*14

CONSTRUCT: 450X900MM JUNCTION BOX
STA. 3+560.89, 12.47 RT

CONSTRUCT: 78MM RMC, TYPE CUG
INSTALL: CABLES: K-10/C, L-10/C, M-10/C, N-5/C, O-5/C, P-2/C

CONSTRUCT: STF STA. 3+363.44, 18.44 RT
INSTALL: TSS, TYPE S
TSA, TYPE 10.7 S-2
TSA, TYPE C-1
PSA, TYPE W-1(2)
PB, R(NJ)10-4S
MAST ARM SIGN "A"
MAST ARM SIGN R(NJ)10-13A

CONSTRUCT: 78MM RMC, TYPE CUR
INSTALL: CABLES: K-10/C, L-10/C, M-10/C, N-5/C, O-5/C, P-2/C, 5-2/C*14

CONSTRUCT: 78MM RMC, TYPE CUR, 78MM RMC, TYPE CU
INSTALL: CABLES: K-10/C, L-10/C, M-10/C, N-5/C, O-5/C, P-2/C, Q-5/C, R-10/C, S-10/C, T-10/C, 10-2/C*14

CONSTRUCT: SFK STA. 3+600.46, 10.91 RT
INSTALL: TSS, TYPE K
TSA, TYPE 7.6MK-2,
TSA, TYPE MM-1, SIGN 'F'

CONSTRUCT: 78MM RMC, TYPE CUG
INSTALL: CABLES: R-10/C, S-10/C, T-10/C

CONSTRUCT: 450X900MM JUNCTION BOX
STA. 3+595.91, 11.62 RT

CONSTRUCT: 78MM RMC, TYPE CUG
INSTALL: CABLE: Q-5/C

CONSTRUCT: SPF STA. 3+585.47, 19.08 RT
INSTALL: PA, TYPE PW-1

CONSTRUCT: 78MM RMC, TYPE CUG
INSTALL: 5-2/C*14

CONSTRUCT: 445x775MM JUNCTION BOX
STA. 3+582.99, 21.33 RT

CONSTRUCT: (2) 41MM RMC , TYPE CUG
INSTALL: 3 PAIRS-1/C*14

CONSTRUCT: 41MM RMC, TYPE CUG
INSTALL: 2-2/C*14

CONSTRUCT: 445x775MM JUNCTION BOX
STA. 3+581.14, 24.41 RT

CONSTRUCT: 41MM RMC, TYPE CUG
INSTALL: 2 PAIRS-1/C*14

LOOP DETECTOR SCHEDULE

DETECTOR NO.	DETECTOR CHANNEL	LOOP	MODE	SIZE	No. OF TURNS	µH
1	1	A	PRESENCE	1.8 by 2.25		
1	2	B	PRESENCE	1.8 by 2.25		
1	3	C	PRESENCE	1.8 by 2.25		
1	4	D	PRESENCE	1.8 by 2.25		
2	1	E	PRESENCE	1.8 by 2.25		
2	2	F	PRESENCE	1.8 by 2.25		
2	3	G	PRESENCE	1.8 by 2.25		
2	4	H	PRESENCE	1.8 by 2.25		
3	1	I	PRESENCE	1.8 by 2.25		
3	2	J	PRESENCE	1.8 by 2.25		
3	3	K	PRESENCE	1.8 by 2.25		
3	4	L	PRESENCE	1.8 by 2.25		
4	1	M	PRESENCE	1.8 by 4.6		
4	2	N	PRESENCE	1.8 by 4.6		
4	3	O	PRESENCE	1.8 by 2.3		
4	4	P	PRESENCE	1.8 by 2.3		
5	1	Q	PRESENCE	1.8 by 4.6		
5	2	R	PRESENCE	1.8 by 4.52		
5	3	S	PRESENCE	1.8 by 4.52		
5	4	T	PRESENCE	1.8 by 2.26		
6	1	U	PRESENCE	1.8 by 2.26		
6	2	V	PRESENCE	1.8 by 4.52		

NUMBER OF TURNS DETERMINED IN THE FIELD.

SIGNAL LEGEND

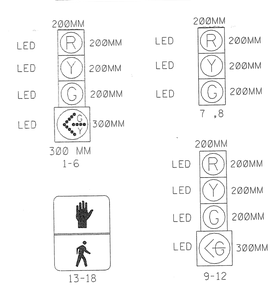

SIGN LEGEND

10 5 0 10 20
SCALE IN METERS

ALL DIMENSIONS IN METERS UNLESS OTHERWISE NOTED

E-8 / E-11

NEW JERSEY DEPARTMENT OF TRANSPORTATION

ELECTRICAL PLANS

ROUTE 9W SECTION 1J

MUNICIPALITY BORO OF ENGLEWOOD CLIFFS COUNTY BERGEN

ROUTE 9W AND PALISADE AVENUE

KSE
KS Engineers, P.C.
Engineers, Surveyors, Planners, Scientists
Phone: (973) 533-1000 FAX: (973) 533-1001

ROBERT S. NASH
NJ PE 39395

CONTROL SECTION
NO.

55
138

REFERENCE

REVISION	DESCRIPTION	BY	CHECKED	DATE

NJDOT CADD DATA
ACCOUNT ELECTRICAL
DIRECTORY drahman
DWG. NAME es:\bjob96-118\dwg8\final\palisade.dgn
PLOT DATE 10-DEC-2002 11:40

STATE	FEDERAL PROJECT NO.
N.J.	

TIMING SCHEDULE

VEHICLE ACTUATION

PHASE	SIGNAL INDICATIONS 1-6	7,8	11,12	9,10	13,14,15,16	17,18	TIME (SECONDS) I	II	III	IV
1. ROUTE 9W LEAD LEFTS	R/~~G~~	R	R	R	DW	DW	5-19	5-19	5-15	5-10
CHANGE	R/~~Y~~	R	R	R	DW	DW	3	3	3	3
2. ROUTE 9W ROW	G	G	R	R	W	DW	63-26	63-25	63-30	33-6
PEDESTRIAN CLEARANCE	G	G	R	R	FDW	DW	21	21	21	21
CHANGE	Y	Y	R	R	DW	DW	4	4	4	4
CLEARANCE	R	R	R	R	DW	DW	2	2	2	2
3. EASTBOUND PALISADE AVE. ROW	R	R	G/~~G~~	R	DW	DW	5-17	5-18	5-17	5-16
CHANGE	R	R	Y	R	DW	DW	4	4	4	4
CLEARANCE	R	R	R	R	DW	DW	2	2	2	2
4. WESTBOUND PALISADE AVE. ROW	R	R	R	G/~~G~~	DW	DW	5-16	5-16	5-16	5-16
CHANGE	R	R	R	Y	DW	DW	4	4	4	4
CLEARANCE	R	R	R	R	DW	DW	2	2	2	2

PEDESTRIAN ACTUATION

1. ROUTE 9W LEAD LEFTS	R/~~G~~	R	R	R	DW	DW	5-19	5-19	5-15	5-10
CHANGE	R/~~Y~~	R	R	R	DW	DW	3	3	3	3
2. ROUTE 9W ROW	G	G	R	R	W	DW	63-26	63-25	63-30	33-6
PEDESTRIAN CLEARANCE	G	G	R	R	FDW	DW	21	21	21	21
CHANGE	Y	Y	R	R	DW	DW	4	4	4	4
CLEARANCE	R	R	R	R	DW	DW	2	2	2	2
3. EASTBOUND PALISADE AVE. ROW	R	R	G/~~G~~	R	DW	W	5	5	5	5
PEDESTRIAN CLEARANCE	R	R	G/~~G~~	R	DW	FDW	16	16	16	16
CHANGE	R	R	Y	R	DW	DW	4	4	4	4
CLEARANCE	R	R	R	R	DW	DW	2	2	2	2
4. WESTBOUND PALISADE AVE. ROW	R	R	R	G/~~G~~	DW	DW	5-11	5-13	5-12	5-11
CHANGE	R	R	R	Y	DW	DW	4	4	4	4
CLEARANCE	R	R	R	R	DW	DW	2	2	2	2
FLASHING OPERATION	Y	Y	R	R	DARK	DARK				

TIMING PLAN

I - 6:30 AM - 9:00 AM, MON-FRI

II - 3:30 PM - 6:30 PM, MON-FRI

III - 9:00 AM - 3:30 PM, MON-FRI
8:00 AM - 9:00 PM SAT - SUN

IV - ALL OTHER TIMES

THE VEHICLE INTERVAL IS TO BE 2 SECONDS AND THE MEMORY IS TO BE OFF

THE MANUAL CONTROL IS TO BE DISCONNECTED.

THE SIGNAL IS TO REST IN PHASE 2. PHASE 1 MAY BE SKIPPED, BUT CAN ONLY FOLLOW EITHER PHASE 3 OR 4.

THE FOLLOWING ARE THE OFFSETS MEASURED FROM THE BEGINING OF YELLOW OF ROUTE 9W AND PRIVATE DRIVE TO THE BEGINING OF YELLOW OF ROUTE 9W AT THIS INTERSECTION:

A. TIMING PLAN I - 102 SECONDS.

B. TIMING PLAN II - 76 SECONDS.

C. TIMINGPLAN III - 88 SECONDS.

D. TIMING PLAN IV - 77 SECONDS.

PAY ITEM NO.	STD. ITEM NO.	TO BE CONSTRUCTED	CONTRACT QUANTITY
73	6G10C	CONCRETE SIDEWALK, 100MM THICK	2 S.M.
111	7A26C	41MM RIGID METALLIC CONDUIT, TYPE CUG	24 LM
112	7A31C	53MM RIGID METALLIC CONDUIT, TYPE CUG	20 LM
113	7A41C	78MM RIGID METALLIC CONDUIT, TYPE CUG	103 LM
115	7A66C	78MM RIGID METALLIC CONDUIT, TYPE CUR	91 LM
116	7A06F	SERVICE WIRE, No. 6 AWG	66 LM
118	7A36H	FOUNDATIONS, TYPE P-MC	1 UNIT
119	7A41H	FOUNDATIONS, TYPE SPF	2 UNITS
120	7A46H	FOUNDATIONS, TYPE STF	2 UNITS
121	7A56H	FOUNDATIONS, TYPE SFK	2 UNITS
122	7A28J	445X775 MM JUNCTION BOXES	4 UNITS
123	7A29J	450X900 MM JUNCTION BOXES	5 UNITS
124	7B21C	LOOP DETECTOR	168 LM
125	7B31C	LOOP DETECTOR LEAD	113 LM
126	7B21D	CONTROLLER ASSEMBLIES, 8 PHASE	1 UNIT
127	7B21E	METER CABINETS, TYPE T	1 UNIT
130	7B60F	PEDESTAL ASSEMBLIES, TYPE PW-1	2 UNITS
131	7B21H	PEDESTRIAN SIGNAL ASSEMBLIES, TYPE W-1	4 UNITS
132	7B21I	PUSH BUTTON ASSEMBLIES	2 UNITS
137	7B27N	TRAFFIC SIGNAL ASSEMBLIES, TYPE 7.6 MK-2	2 UNITS
140	7B52J	TRAFFIC SIGNAL ASSEMBLIES, TYPE 10.7S-2	1 UNIT
141	7B62J	TRAFFIC SIGNAL ASSEMBLIES, TYPE 12.2S-2	1 UNIT
144	7B31O	TRAFFIC SIGNAL ASSEMBLIES, TYPE C-1	2 UNITS
145	7B41O	TRAFFIC SIGNAL ASSEMBLIES, TYPE MM-1	2 UNITS
147	7B11P	TRAFFIC SIGNAL CABLE, 2 CONDUCTOR	1219 LM
148	7B21P	TRAFFIC SIGNAL CABLE, 5 CONDUCTOR	299 LM
149	7B31P	TRAFFIC SIGNAL CABLE, 10 CONDUCTOR	522 LM
152	7B31Q	TRAFFIC SIGNAL STANDARDS, TYPE S	2 UNITS
153	7B41Q	TRAFFIC SIGNAL STANDARDS, TYPE K	2 UNITS
154	7B07R	TRAFFIC CONTROLLER ASSEMBLY TURN ON	1 UNIT
163	7B34S	INTERIM TRAFFIC SIGNAL SYSTEM, LOCATION NUMBER 4	LS

REVISION	DESCRIPTION	BY	CHECKED	DATE

NJDOT CADD DATA
ACCOUNT ELECTRICAL
DIRECTORY dr-ahman
DWG. NAME e:\Job96-11\dwg\final\palisade.dgn
PLOT DATE 10-DEC-2002 11:50

REFERENCE

E-9 / E-11

NEW JERSEY DEPARTMENT OF TRANSPORTATION

ELECTRICAL PLANS

ROUTE 9W SECTION 1J

MUNICIPALITY BORO OF ENGLEWOOD CLIFFS COUNTY BERGEN

ROUTE 9W AND PALISADE AVENUE

KSE
KS Engineers, P.C.
Engineers,Surveyors, Construction Managers
Phone: (973) 623-0200 FAX: (973) 623-0966

ROBERT S. NASH
NJ PE 39395

CONTROL SECTION NO.

STATE	FEDERAL PROJECT NO.
N.J.	

PAY ITEM NO.	STD. ITEM NO.	TO BE CONSTRUCTED	CONTRACT QUANTITY
73	6G10C	CONCRETE SIDEWALK, 100 MM THICK	2.0 S.M.
111	7A26C	41 MM RIGID METALLIC CONDUIT, TYPE CUG	45 L.M.
112	7A31C	53 MM RIGID METALLIC CONDUIT, TYPE CUG	17 L.M.
113	7A41C	78 MM RIGID METALLIC CONDUIT, TYPE CUG	65 L.M.
115	7A66C	78 MM RIGID METALLIC CONDUIT, TYPE CUR	110 L.M.
116	7A06F	SERVICE WIRE, NO. 6 AWG	50 L.M.
117	7A21H	FOUNDATIONS, TYPE SFT	1 UNIT
118	7A36H	FOUNDATIONS, TYPE P-MC	1 UNIT
120	7A46H	FOUNDATIONS, TYPE STF	1 UNIT
121	7A56H	FOUNDATIONS, TYPE SFK	2 UNITS
122	7A28J	445 BY 775 MM JUNCTION BOXES	3 UNITS
123	7A29J	450 BY 900 MM JUNCTION BOXES	4 UNITS
124	7B21C	LOOP DETECTOR	182.12 L.M.
125	7B31C	LOOP DETECTOR LEAD	750 L.M.
126	7B21D	CONTROLLER ASSEMBLIES, 8 PHASE	1 UNIT
127	7B21E	METER CABINET, TYPE T	1 UNIT
131	7B21H	PEDESTRIAN SIGNAL ASSEMBLIES, TYPE W-1	4 UNITS
132	7B21I	PUSH BUTTON ASSEMBLIES	2 UNITS
133	7B11J	TRAFFIC SIGNAL ASSEMBLIES, TYPE 4.6MA-1	1 UNIT
142	7B31J	TRAFFIC SIGNAL ASSEMBLIES, TYPE 7.6MA-1	1 UNITS
143	7B32J	TRAFFIC SIGNAL ASSEMBLIES, TYPE 7.6MA-2	1 UNITS
140	7B52J	TRAFFIC SIGNAL ASSEMBLIES, TYPE 10.7S-2	1 UNIT
145	7B41O	TRAFFIC SIGNAL ASSEMBLIES, TYPE MM-1	2 UNITS
147	7B11P	TRAFFIC SIGNAL CABLE, 2 CONDUCTOR	220 L.M.
148	7B21P	TRAFFIC SIGNAL CABLE, 5 CONDUCTOR	550 L.M.
149	7B31P	TRAFFIC SIGNAL CABLE, 10 CONDUCTOR	560 L.M.
151	7B21Q	TRAFFIC SIGNAL STANDARD, TYPE T	1 UNIT
152	7B31Q	TRAFFIC SIGNAL STANDARD, TYPE S	1 UNIT
153	7B41Q	TRAFFIC SIGNAL STANDARDS, TYPE K	2 UNITS
154	7B07R	TRAFFIC CONTROLLER ASSEMBLY TURN ON	1 UNIT

LOOP DETECTOR SCHEDULE

DETECTOR NO.	CHANNEL	LOOP	MODE	SIZE	No. OF TURNS	µH
1	1	A	PRESENCE	1.8 by 4.8		
1	2	B	PRESENCE	1.8 by 4.8		
1	3	C	PRESENCE	1.8 by 4.8		
1	4	D	PRESENCE	1.8 by 4.8		
2	1	E	PRESENCE	1.8 by 2.1		
2	2	F	PRESENCE	1.8 by 2.1		
2	3	G	PRESENCE	1.8 by 2.1		
2	4	H	PRESENCE	1.8 by 2.1		

NUMBER OF TURNS DETERMINED IN THE FIELD.

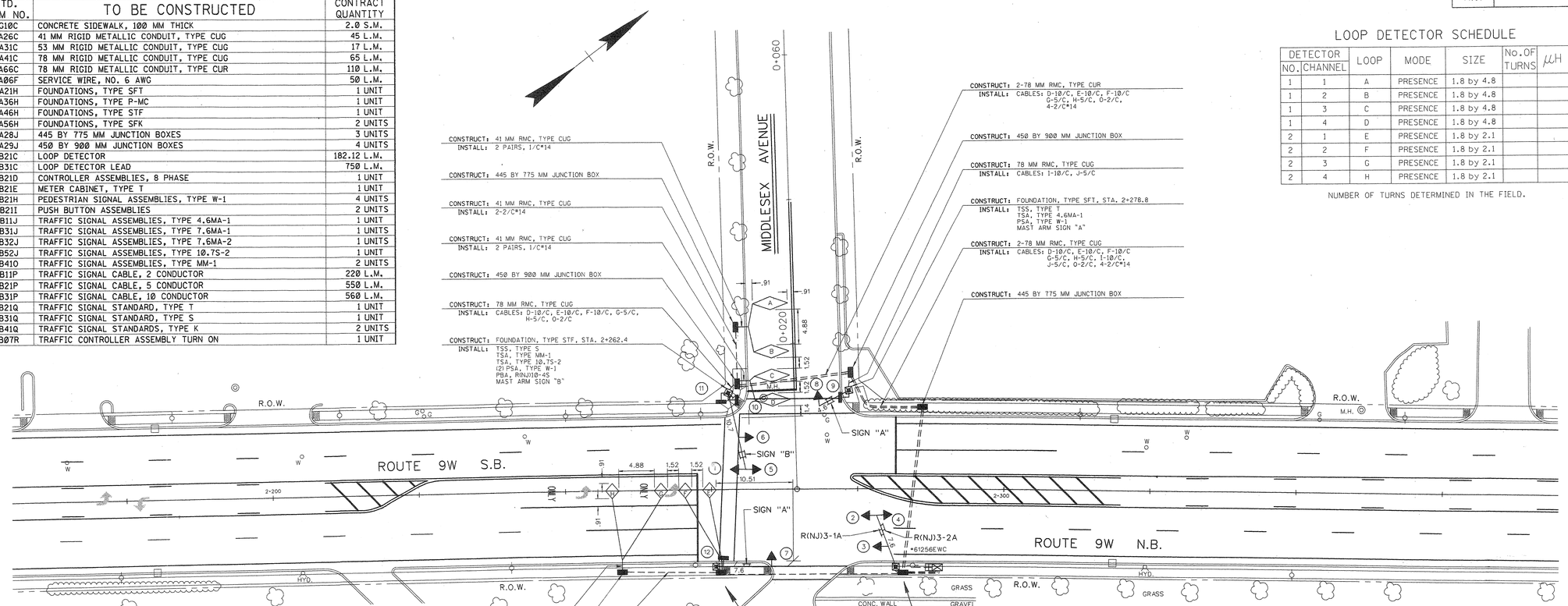

SIGN LEGEND

Sylvan Ave 9W — 200/150 C
SIGN "A"*
1500MM x 450MM
400mm x 400mm SHIELD

Middlesex Ave — 125/93.75 C
SIGN "B"*
1500mm x 450mm

*TWO SIDED SIGNS

NO RIGHT TURN — 150mm C
R(NJ)3-1A
1500mm x 300mm
(BLACK ON WHITE)

PUSH BUTTON FOR
R(NJ)10-4S
9" x 12"

NO LEFT TURN — 150mm C
R(NJ)3-2A
1500mm x 300mm
(BLACK ON WHITE)

BLOCK WIRING DIAGRAM

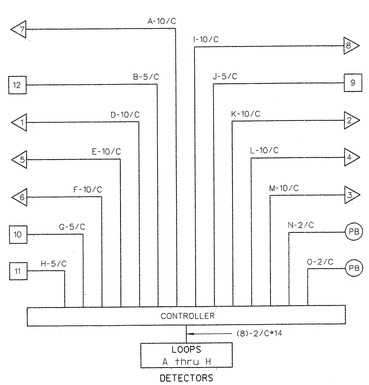

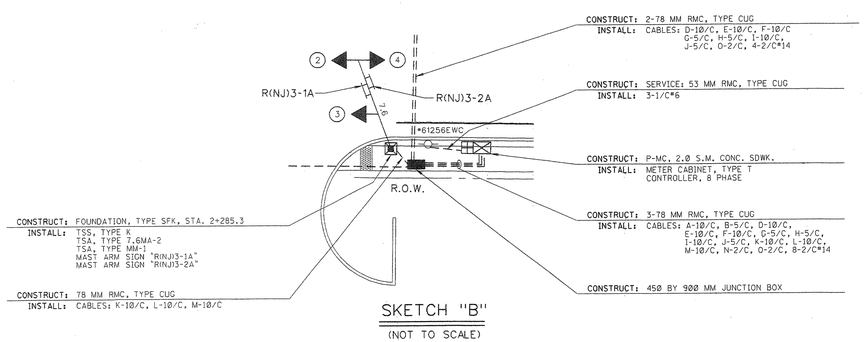

SKETCH "B"
(NOT TO SCALE)

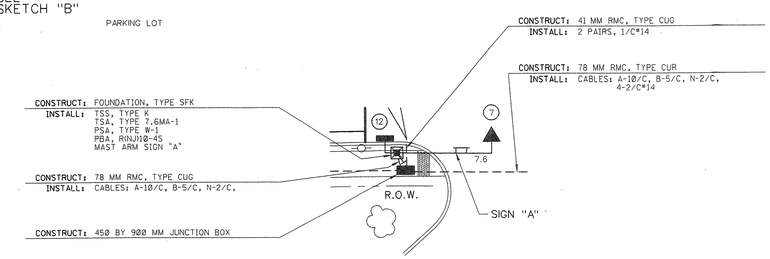

SKETCH "A"
(NOT TO SCALE)

10 5 0 10 20
SCALE IN METERS

ALL DIMENSIONS IN METERS UNLESS OTHERWISE NOTED

SIGNAL LEGEND

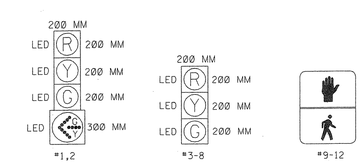

E-10
E-11

NEW JERSEY DEPARTMENT OF TRANSPORTATION

ELECTRICAL PLANS

ROUTE 9W — SECTION 1J

MUNICIPALITY BORO OF ENGLEWOOD CLIFFS — COUNTY BERGEN

ROUTE 9W & MIDDLESEX AVENUE

CONTROL SECTION NO. 0209117

57 / 138

REFERENCE ROUTE 9W SECTION 1J

NJDOT CADD DATA

ACCOUNT	ELECTRICAL
DIRECTORY	drramon
DWG. NAME	e18\0596-118dwg\0209117.dgn
PLOT DATE	25-NOV-2002 14:02

REVISION	G.D.A.	05/19/98
PROPOSED LOOPS	G.D.A.	P.S.S. 10/09/97
REVISION DESCRIPTION	BY	CHECKED DATE

STATE	FEDERAL PROJECT NO.
N.J.	

TIMING SCHEDULE
VEHICLE ACTUATION

PHASE	SIGNAL INDICATIONS 1,2	3	4-6	7,8	9,10	11,12	TIME (SECONDS) I	II	III	IV
1. ROUTE 9W ROW NB LEAD	G/~~G~~	G	R	R	DW	DW	5-8	5-8	5-8	5-8
CHANGE	G/~~Y~~	G	R	R	DW	DW	3	3	3	3
2. ROUTE 9W ROW	G	G	G	R	W	DW	84-64	84-64	84-64	54-34
PEDESTRIAN CLEARANCE	G	G	G	R	FDW	DW	11	11	11	11
CHANGE	Y	Y	Y	R	DW	DW	5	5	5	5
CLEARANCE	R	R	R	R	DW	DW	1	1	1	1
3. MIDDLESEX AVE. ROW	R	R	R	G	DW	DW	5-22	5-22	5-22	5-22
CHANGE	R	R	R	Y	DW	DW	4	4	4	4
CLEARANCE	R	R	R	R	DW	DW	2	2	2	2

PEDESTRIAN ACTUATION

	1,2	3	4-6	7,8	9,10	11,12	I	II	III	IV
1. ROUTE 9W ROW NB LEAD	G/~~G~~	G	R	R	DW	DW	5-8	5-8	5-8	5-8
CHANGE	G/~~Y~~	G	R	R	DW	DW	3	3	3	3
2. ROUTE 9W ROW	G	G	G	R	W	DW	67-64	67-64	67-64	37-34
PEDESTRIAN CLEARANCE	G	G	G	R	FDW	DW	11	11	11	11
CHANGE	Y	Y	Y	R	DW	DW	5	5	5	5
CLEARANCE	R	R	R	R	DW	DW	1	1	1	1
3. MIDDLESEX AVE. ROW	R	R	R	G	DW	W	5	5	5	5
PEDESTRIAN CLEARANCE	R	R	R	G	DW	FDW	17	17	17	17
CHANGE	R	R	R	Y	DW	DW	4	4	4	4
CLEARANCE	R	R	R	R	DW	DW	2	2	2	2
FLASHING OPERATION	Y	Y	Y	R	DARK	DARK				

TIMING PLAN

I - 6:30 AM - 9:00 AM, MON-FRI

II - 3:30 PM - 6:30 PM, MON-FRI,

III - 9:00 AM - 3:30 PM, MON-FRI
8:00 AM - 9:00 PM SAT - SUN

IV - ALL OTHER TIMES

THE VEHICLE INTERVAL IS TO BE 2 SECONDS AND THE MEMORY IS TO BE OFF

THE MANUAL CONTROL IS TO BE DISCONNECTED.

THE SIGNAL IS TO REST IN PHASE 2. PHASE 1 MAY BE SKIPPED BUT IT CAN ONLY FOLLOW PHASE 3.

THE FOLLOWING ARE THE OFFSETS MEASURED FROM THE BEGINING OF YELLOW OF ROUTE 9W AND PRIVATE DRIVE TO THE BEGINING OF YELLOW OF ROUTE 9W AT THIS INTERSECTION:

1. TIMING PLAN I - 87 SECONDS BEFORE PRIVATE DRIVE MAINLINE YELLOW.
2. TIMING PLAN II - 32 SECONDS AFTER PRIVATE DRIVE MAINLINE YELLOW.
3. TIMINGPLAN III - 15 SECONDS AFTER PRIVATE DRIVE MAINLINE YELLOW.
4. TIMING PLAN IV - 15 SECONDS AFTER PRIVATE DRIVE MAINLINE YELLOW.

REVISION DESCRIPTION	BY	CHECKED	DATE
REVISION	G.D.A.		05/19/98
PROPOSED LOOPS	G.D.A.	P.S.S.	10/09/91

NJDOT CADD DATA
ACCOUNT ELECTRICAL
DIRECTORY drahman
DWG. NAME es8job96-118dwg0209117-sht2.dgn
PLOT DATE 25-NOV-2002 12:56

REFERENCE ROUTE 9W SECTION 1J

10 5 0 10 20
SCALE IN METERS

ALL DIMENSIONS IN METERS UNLESS OTHERWISE NOTED

E-11 / E-11

NEW JERSEY DEPARTMENT OF TRANSPORTATION

ELECTRICAL PLANS

ROUTE 9W SECTION 1J

MUNICIPALITY BORO OF ENGLEWOOD CLIFFS COUNTY BERGEN

ROUTE 9W & MIDDLESEX AVENUE

CONTROL SECTION NO. 0209117

58 / 138