STATE	FEDERAL PROJECT NO.	SHEET	TOTAL SHEETS
N.J.		129	138

STRUCTURE NO. N/A

STRUCTURE NAME WALL 1
WALL 2

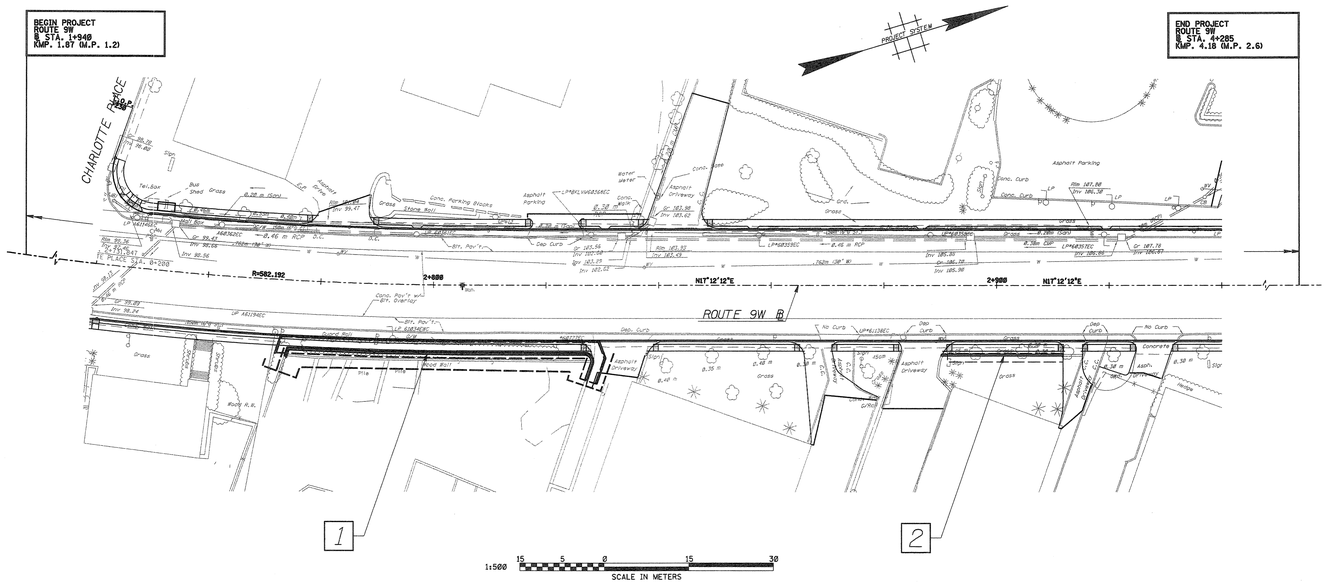

GENERAL NOTES:

1. DESIGN SPECIFICATIONS:

1996 (16TH EDITION) AASHTO STANDARD SPECIFICATIONS FOR HIGHWAY BRIDGES (WITH CURRENT INTERIMS) AS MODIFIED BY SECTION 3 OF NJDOT DESIGN MANUAL FOR BRIDGES AND STRUCTURES, THIRD ADDITION 1998.

2. CONSTRUCTION SPECIFICATIONS:

2001 NJDOT STANDARD SPECIFICATIONS FOR ROAD AND BRIDGE CONSTRUCTION AS MODIFIED BY THE SPECIAL PROVISIONS. (METRIC UNITS).

3. LIVE LOAD (WALL #1):

A) LIVE LOAD SURCHARGE EQUAL TO 0.6M (2ft.) OF EARTH PRESSURE.
B) VEHICULAR IMPACT LOAD = 44.482 kN (10 KIPS)

4. CONCRETE DESIGN STRESSES:

A) SPECIFIED DESIGN COMPRESSIVE STRENGTH (F'c)

(IN ACCORDANCE WITH THE RETEST LIMIT FOR PAY-ADJUSTMENT ITEMS AS SPECIFIED IN TABLE 914-4 OF THE NJDOT STANDARD SPECIFICATIONS AND AS MAY BE MODIFIED BY THE SPECIAL PROVISIONS).

CLASS A . . . . . 28 MPa (4,000 PSI)
CLASS B . . . . . 21 MPa (3,000 PSI)

B) CLASS DESIGN STRENGTHS

(IN ACCORDANCE WITH TABLE 914-3 OF THE NJDOT STANDARD SPECIFICATIONS).

CLASS A . . . . . 32 MPa (4,600 PSI)
CLASS B . . . . . 26 MPa (3,700 PSI)

C) ALLOWABLE STRESSES, EXTREME FIBER IN COMPRESSION (Fc)

CLASS A . . . . . 11.2 MPa (1,600 PSI)
CLASS B . . . . . 8.4 MPa (1,200 PSI)

5. REINFORCEMENT STEEL:

A) ASTM A615M (GRADE 420)
TENSILE STRESS (FS) . . . . . 165 MPa (24,000 PSI)

6. WALL:

A) WALL TO CONSIST OF CAST-IN-PLACE FOOTING, STEM AND PARAPET
TENSILE STRESS (FS) . . . . . 165 MPa

B) REINFORCEMENT TO HAVE A MINIMUM 51mm (2") COVER, UNLESS OTHERWISE NOTED. CHAMFER ALL EXPOSED CONCRETE EDGES 13mm X 13mm (1/2" X 1/2") UNLESS OTHERWISE NOTED.

7. SEISMIC DESIGN NOTES:

SEISMIC PERFORMANCE CATAGORY (SPC) = B
ACCELERATION COEFFICIENT "A" = 0.18
SOIL PROFILE = I

8. BORINGS:

-INDICATES LOCATION OF BORINGS.
LOG NO.

BORINGS SB#564W-4 AND SB#564W-5 TAKEN BY NEW JERSEY DEPARTMENT OF TRANSPORTATION IN SEPTEMBER 1996.

9. FOUNDATION DESIGN CRITERIA:

REINFORCED CONCRETE FOOTING FOUNDED ON SOIL.
A) BEARING CAPACITY = 192 kPa (2 TSF)
B) FACTOR OF SAFETY FOR OVERTURNING = 2.0
C) FACTOR OF SAFETY FOR SLIDING = 1.5

10. TRAFFIC:

VEHICULAR TRAFFIC TO BE MAINTAINED DURING CONSTRUCTION (SEE TRAFFIC CONTROL PLANS)

11. UTILITIES (SEE SPECS.):

EXISTING UTILITY POLES (BY WALL #1) TO BE REMOVED AND RELOCATED. WORK TO BE PERFORMED BY THE UTILITY COMPANY.

12. EXISTING STRUCTURE DEMOLITION:

EXISTING TIMBER, CONCRETE AND MASONRY BLOCK RETAINING WALLS TO BE REMOVED TO LIMITS SHOWN ON PLANS (SEE SPECIFICATIONS).

13. MEASUREMENTS:

ELEVATION AND DIMENSIONS RELATIVE TO EXISTING STRUCTURES AND FEATURES ARE APPROXIMATE AND MUST BE FIELD VERIFIED BY THE CONTRACTOR PRIOR TO STARTING THE WORK. SOME ADJUSTMENTS ARE TO BE EXPECTED. ASSOCIATED COSTS SHALL BE INCLUDED IN THE BID PRICES FOR THE VARIOUS ITEMS.

INDEX TO STRUCTURES

NO.	DESCRIPTION	STRUCTURE NO.	SHEETS
1	RETAINING WALL 1 @ STATION 2+800	N/A	B3-B7
2	RETAINING WALL 2 @ STATION 2+900	N/A	B8-B10

FILE NAME: p:\1907\cadd\dgn\bridge\b1.dgn
DATE: 02 DEC 2002
USERNAME: ALiscion

CONTROL SECTION	0209	JOB NO.	0209508
DES. BY	P. DZWONCZYK	CHK. BY	M. MAVER
DWN. BY	T. ENRIGHT		
IN CHARGE OF	R. GIAMARIO		

NEW JERSEY DEPARTMENT OF TRANSPORTATION
BUREAU OF STRUCTURAL ENGINEERING

KEY PLAN TO STRUCTURES AND GENERAL NOTES

ROUTE 9W
BOROUGH OF ENGLEWOOD CLIFFS

SECTION 1J
BERGEN COUNTY

REVISION	BY	CK'D.	DATE

LICHTENSTEIN CONSULTING ENGINEERS, INC.
RONALD GIAMARIO
N.J. P.E. LICENSE #31556

BRIDGE SHEET NO. B1 OF B10

129
138

ESTIMATE OF QUANTITIES - BRIDGE

PROJECT : ROUTE 9W - SECTION IJ

PAY ITEM NO.	STANDARD ITEM NO.	DESCRIPTION	UNIT	CONTRACT QUANTITY	AS-BUILT QUANTITY	PAY ITEM NO.	STANDARD ITEM NO.	DESCRIPTION	UNIT	CONTRACT QUANTITY	AS-BUILT QUANTITY
		WALL NO. 1									
168	2A41C	CLEARING SITE, STRUCTURE	L.S.	LUMP SUM							
169	2F12E	FOUNDATION EXCAVATION	C.M.	775							
170	5A21A	CONCRETE IN STRUCTURES, FOOTINGS	C.M.	124							
171	5A21E	REINFORCEMENT STEEL IN STRUCTURES	KG	7,800							
172	5A31A	CONCRETE IN STRUCTURES, RETAINING WALLS	C.M.	97							
173	5A31E	RENFORCEMENT STEEL IN STRUCTURES, EPOXY COATED	KG	5,425							
174	5A33C	CONCRETE IN SUPERSTRUCTURE, PARAPETS	L.M.	60							
175	5H01E	METAL RAILING (1 RAIL, ALUMINUM)	L.M.	60							
176	5M21C	TEMPORARY SHEETING	S.M.	280							
177	9Z99Z	NO ITEM									
		WALL NO. 2									
178	2A41C	CLEARING SITE, STRUCTURE	L.S.	LUMP SUM							
179	2F12E	FOUNDATION EXCAVATION	C.M.	85							
180	5A21A	CONCRETE IN STRUCTURES, FOOTINGS	C.M.	22							
181	5A21E	REINFORCEMENT STEEL IN STRUCTURES	KG	925							
182	5A31A	CONCRETE IN STRUCTURES, RETAINING WALLS	C.M.	11							
183	5A31E	REINFORCEMENT STEEL IN STRUCTURES, EPOXY COATED	KG	375							
184	N5W01	BRICK FACING	S.M.	36							
185	9Z99Z	NO ITEM									
186	9Z99Z	NO ITEM									
187	9Z99Z	NO ITEM									
188	9Z99Z	NO ITEM									

FILE NAME: p:\1907\cadd\dgn\1907beqd.dgn
DATE: 02 DEC 2002
USERNAME: ALiscian

CONTROL SECTION: 0209
JOB NO.: 0209508

LICHTENSTEIN CONSULTING ENGINEERS, INC.
RONALD GIAMARIO
N.J. P.E. LIC. NO. 31556

BRIDGE SHEET B2 OF B10

STATE	FEDERAL PROJECT NO.	SHEET	TOTAL SHEETS
N.J.		131	138

STRUCTURE NO. N/A

STRUCTURE NAME WALL 1

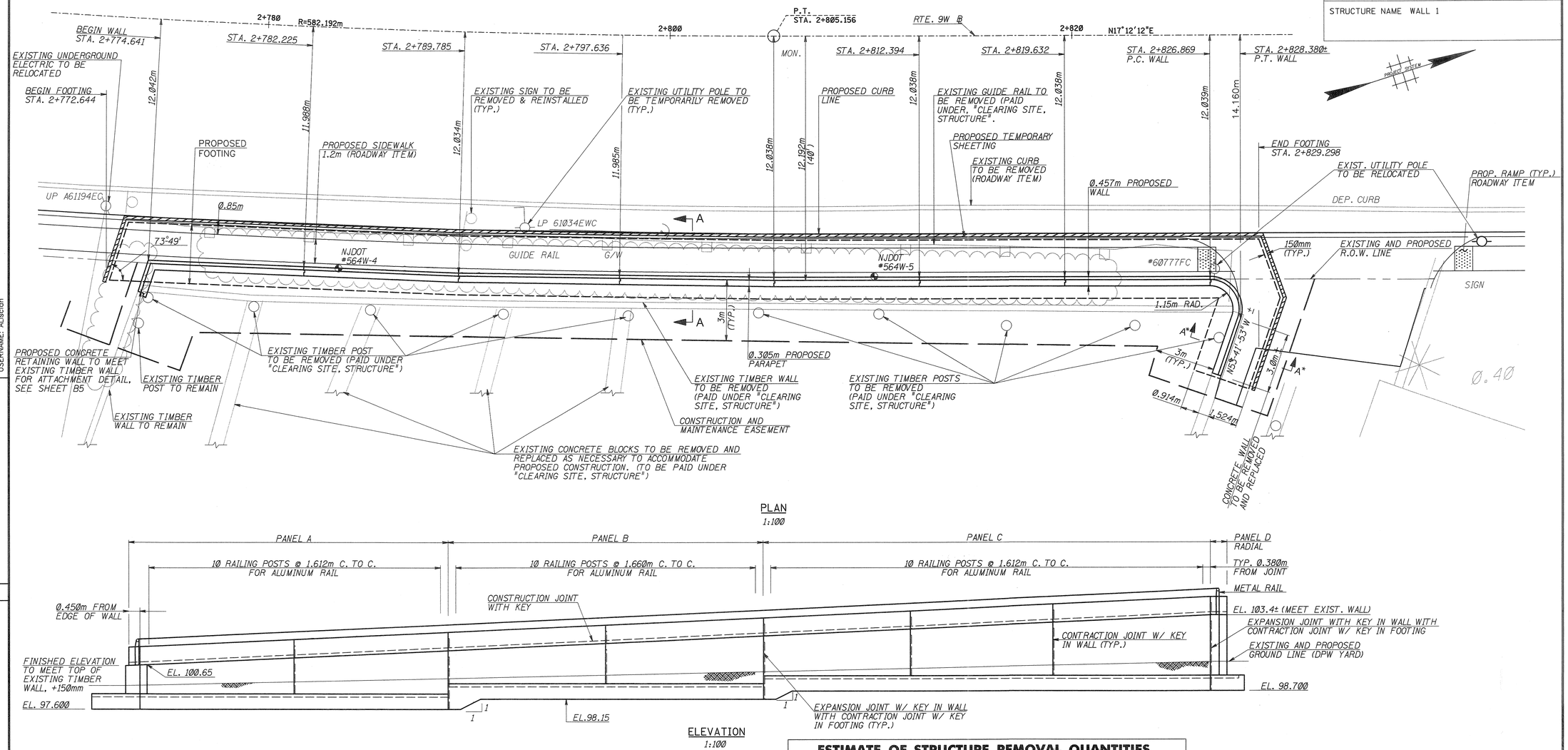

PLAN
1:100

ELEVATION
1:100

SUMMARY OF QUANTITIES

PAY ITEM NO.	STANDARD ITEM NO.	DESCRIPTION	UNIT	CONTRACT QUANTITY
168	2A41C	CLEARING SITE, STRUCTURE	L.S.	L.S.
169	2F12E	FOUNDATION EXCAVATION	C.M.	775
170	5A21A	CONCRETE IN STRUCTURES, FOOTINGS	C.M.	124
171	5A21E	REINFORCEMENT STEEL IN STRUCTURES	KG.	7,800
172	5A31A	CONCRETE IN STRUCTURES, RETAINING WALLS	C.M.	97
173	5A31E	REINFORCEMENT STEEL IN STRUCTURES, EPOXY COATED	KG.	5,425
174	5A33C	CONCRETE IN SUPERSTRUCTURE, PARAPETS	L.M.	60
175	5H01E	METAL RAILING (1 RAIL, ALUMINUM)	L.M.	60
176	5M21C	TEMPORARY SHEETING	S.M.	280

ESTIMATE OF STRUCTURE REMOVAL QUANTITIES

DESCRIPTION	QUANTITY
375 MM DIA. TIMBER POSTS	35 L.M.
TIMBER WALL	125 S.M.
CONCRETE BLOCK (TO BE REMOVED AND REPLACED)	15 S.M.
CONCRETE WALL (TO BE REMOVED AND REPLACED)	10 S.M.

LEGEND:

PROPOSED TEMPORARY SHEETING

1:100 0 5 10
SCALE IN METERS

INDEX OF DRAWINGS

NO.	TITLE
B3	GENERAL PLAN AND ELEVATION - WALL 1
B4	WALL 1 - FOOTING PLAN AND ELEVATIONS
B5	WALL 1 - ELEVATION AND SECTIONS
B6	WALL 1 - DETAILS
B7	SINGLE RAIL RAILING

NOTES:

1. FOR GENERAL NOTES SEE DWG. B1.
2. SEE DWG. B4 FOR DEVELOPED ELEVATIONS AND JOINT SPACES FOR PANELS A-C AND DWG B4 FOR PANEL D.
3. RAILING NOT SHOWN IN PLAN VIEW FOR CLARITY.
4. FOR SECTIONS A-A AND A*-A*, SEE DWG. B5
5. FOR ADDITIONAL RAILING POST LOCATIONS SEE DWG. B6.
6. ESTIMATE OF STRUCTURE REMOVAL QUANTITIES IS FOR INFORMATIONAL PURPOSES ONLY AND IS NOT GUARANTEED TO BE CORRECT. BIDDERS SHALL VISIT THE SITE PRIOR TO SUBMITTING BIDS TO ASCERTAIN THE EXTENT OF THE WORK.

CONTROL SECTION	0209	JOB NO.	0209508
DES. BY	P. DZWONCZYK	CHK. BY	M. MAVER
DWN. BY	T. ENRIGHT		
IN CHARGE OF	R. GIAMARIO		

REVISION	BY	CK'D.	DATE

NEW JERSEY DEPARTMENT OF TRANSPORTATION
BUREAU OF STRUCTURAL ENGINEERING

GENERAL PLAN AND ELEVATION WALL 1

ROUTE 9W
BOROUGH OF ENGLEWOOD CLIFFS

SECTION 1J
BERGEN COUNTY

LICHTENSTEIN CONSULTING ENGINEERS, P.A.
RONALD GIAMARIO
N.J. P.E. LICENSE #31556

BRIDGE SHEET NO. B3 OF B10

131
138

FILE NAME: p:\1907\cadd\dgn\bridge\b3.dgn
DATE: 02 DEC 2002
USERNAME: ALiscion

STATE	FEDERAL PROJECT NO.	SHEET	TOTAL SHEETS
N.J.		132	138

STRUCTURE NO. N/A

STRUCTURE NAME WALL 1

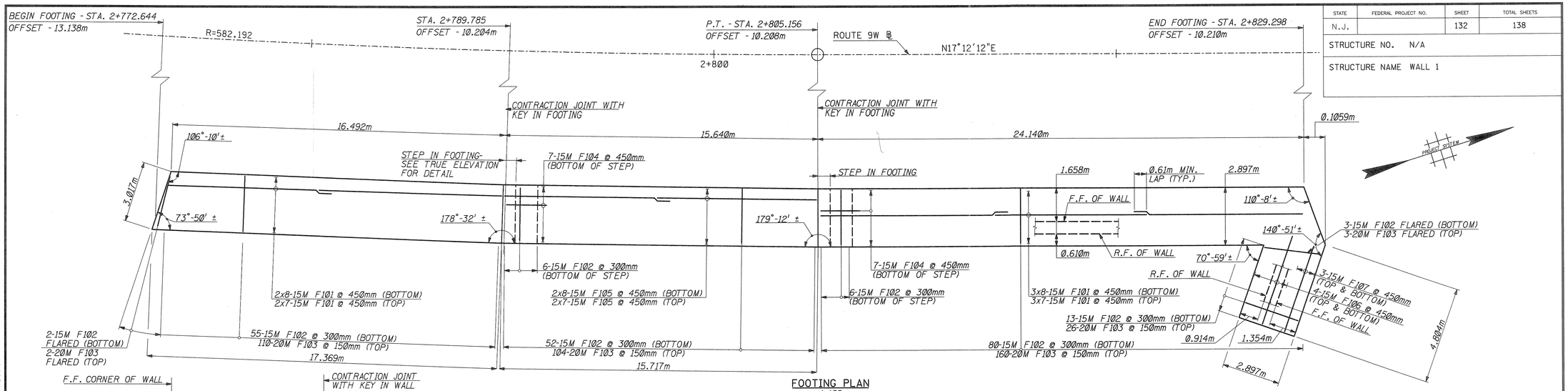

FOOTING PLAN
1:100

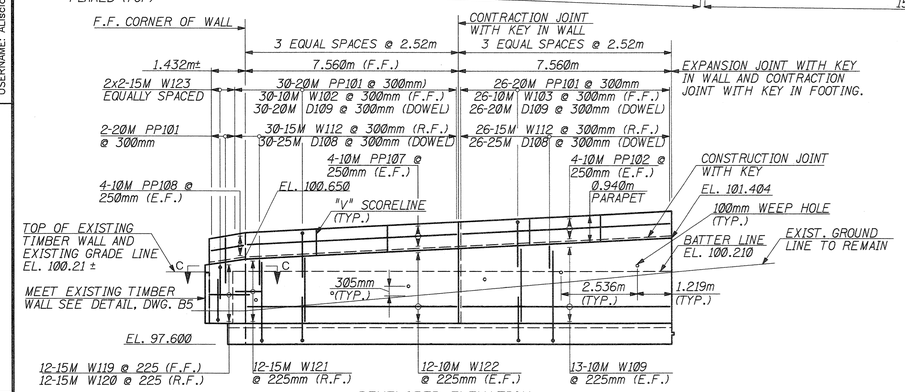

DEVELOPED ELEVATION
PANEL A
1:100

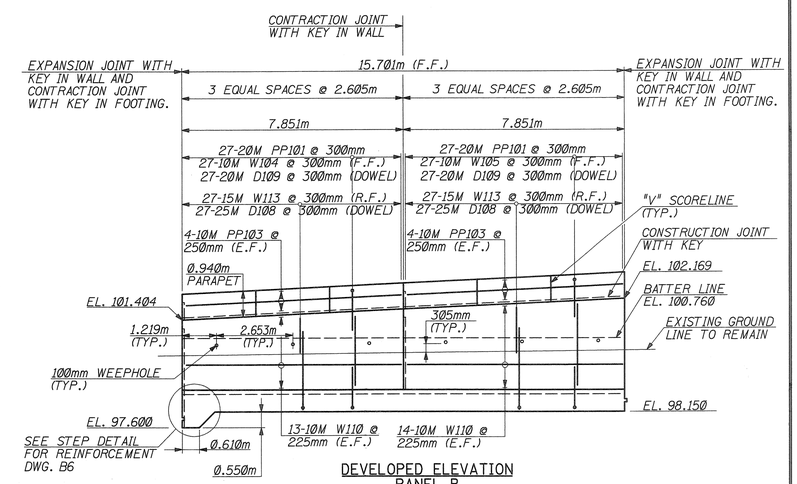

DEVELOPED ELEVATION
PANEL B
1:100

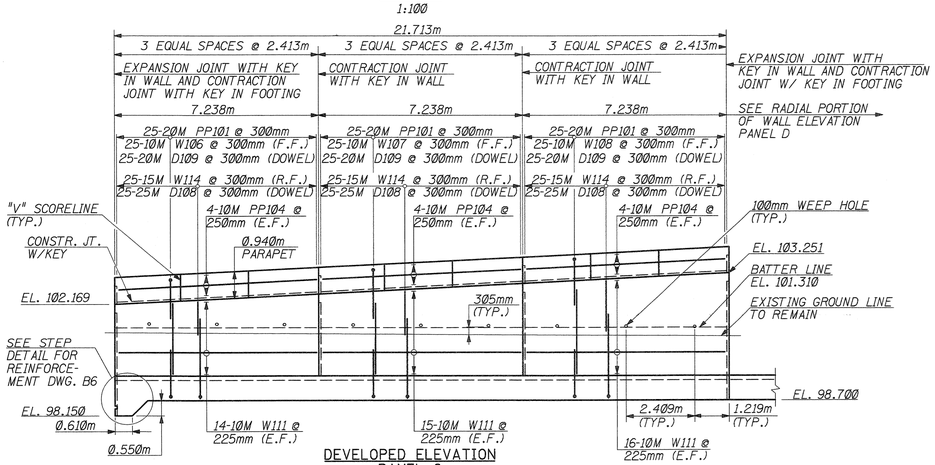

DEVELOPED ELEVATION
PANEL C
1:100

QUANTITIES

PAY ITEM NO.	STANDARD ITEM NO.	DESCRIPTION	UNIT	CONTRACT QUANTITY
169	2F12E	FOUNDATION EXCAVATION	C.M.	775
170	5A21A	CONCRETE IN STRUCTURES, FOOTINGS	C.M.	124
171	5A21E	REINFORCEMENT STEEL IN STRUCTURES	KG.	7,800
172	5A31A	CONCRETE IN STRUCTURES, RETAINING WALLS	C.M.	97
173	5A31E	REINFORCEMENT STEEL IN STRUCTURES, EPOXY COATED	KG.	5,425
174	5A33C	CONCRETE IN SUPERSTRUCTURE, PARAPETS	L.M.	60

NOTES:

1. E.F. DENOTES EACH FACE. F.F. DENOTES FRONT FACE. R.F. DENOTES REAR FACE.
2. FOR SECTION C-C AND DEVELOPED ELEVATION OF PANEL D SEE SHEET B5.
3. SEE SHEET B6 FOR WEEPHOLE DETAIL.

1:25 — 0 1.25 2.5 — SCALE IN METERS

1:100 — 0 5 10 — SCALE IN METERS

NEW JERSEY DEPARTMENT OF TRANSPORTATION
BUREAU OF STRUCTURAL ENGINEERING

WALL 1
FOOTING PLAN AND ELEVATIONS

ROUTE 9W — SECTION 1J

BOROUGH OF ENGLEWOOD CLIFFS — BERGEN COUNTY

CONTROL SECTION	0209	JOB NO.	0209S08
DES. BY	P. DZWONCZYK	CHK. BY	M. MAVER
DWN. BY	T. ENRIGHT		

IN CHARGE OF R. GIAMARIO

REVISION	BY	CK'D.	DATE

LICHTENSTEIN CONSULTING ENGINEERS, INC.
RONALD GIAMARIO
N.J. P.E. LICENSE #31556

BRIDGE SHEET NO. B4 OF B10

132 / 138

FILE NAME: p:\1907\cadd\dgn\bridge\b4.dgn
DATE: 02 DEC 2002
USERNAME: ALisson

STATE	FEDERAL PROJECT NO.	SHEET	TOTAL SHEETS
N.J.		133	138

STRUCTURE NO. N/A

STRUCTURE NAME WALL 1

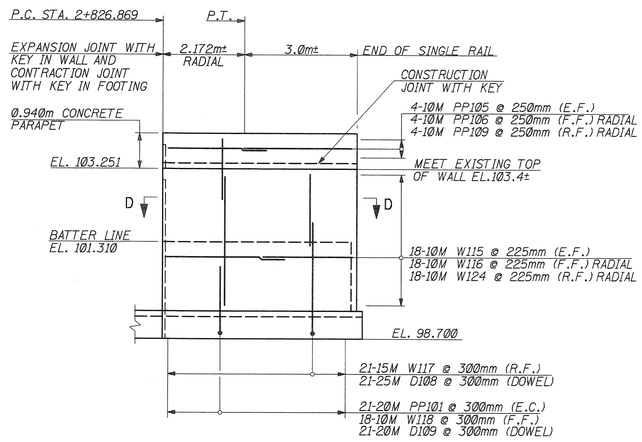

PANEL D
DEVELOPED ELEVATION OF RADIAL PORTION OF WALL

(FRONT FACE SHOWN)
SCALE: 1:75

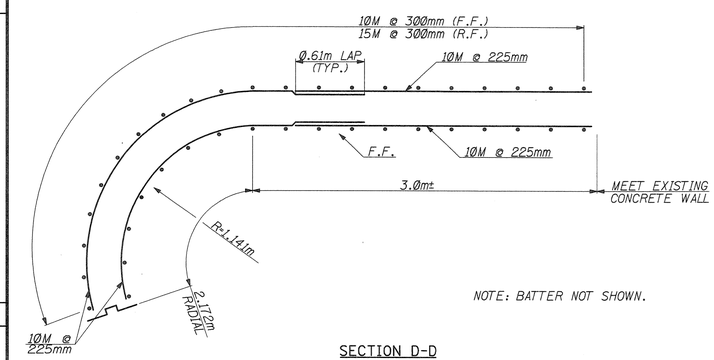

NOTE: BATTER NOT SHOWN.

SECTION D-D
SCALE: 1:25

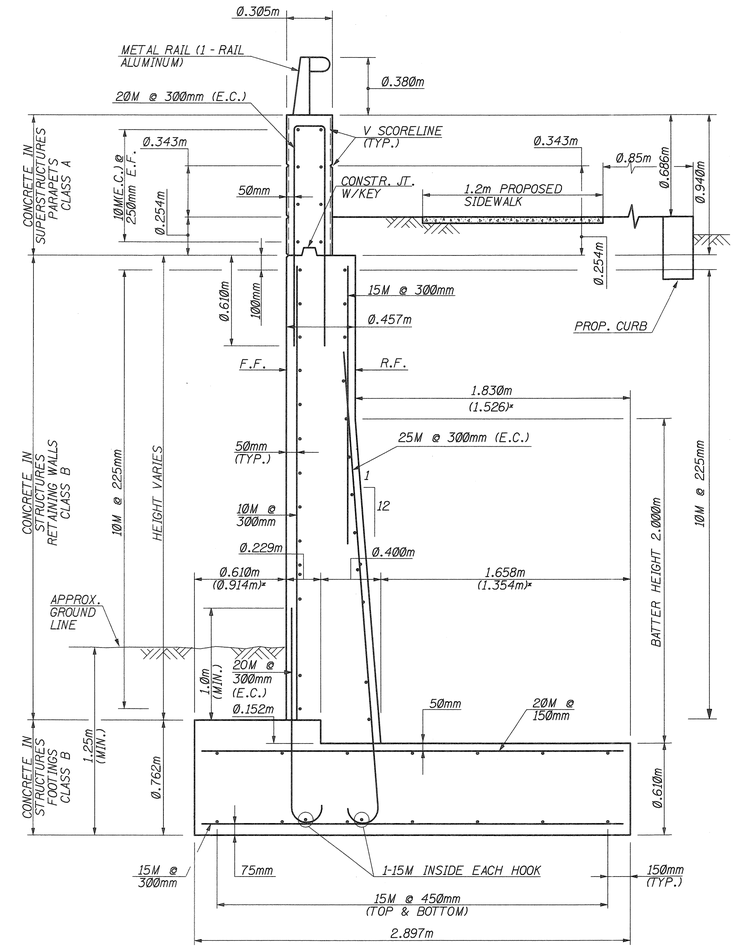

SECTION A-A & A*-A*
SCALE: 1:25

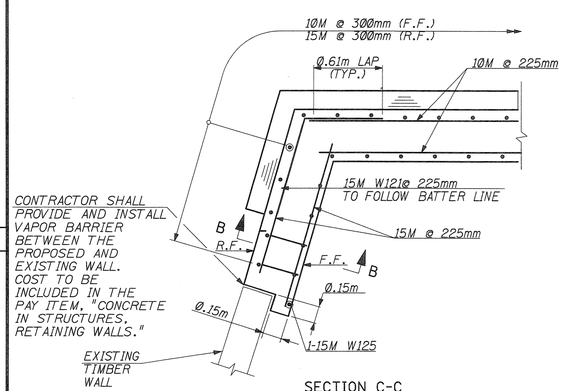

CONTRACTOR SHALL PROVIDE AND INSTALL VAPOR BARRIER BETWEEN THE PROPOSED AND EXISTING WALL. COST TO BE INCLUDED IN THE PAY ITEM, "CONCRETE IN STRUCTURES, RETAINING WALLS."

SECTION C-C
SCALE: 1:25

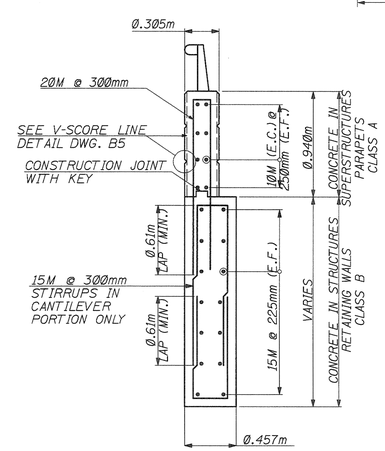

SECTION B-B
(SOUTH CANTILEVER WALL SECTION)
SCALE: 1:25

1:25 0 1.25 2.5 SCALE IN METERS

1:75 0 3.75 7.5 SCALE IN METERS

REINFORCEMENT BAR LIST

MARK	SIZE	TYPE	LENGTH	TOTAL	A	B	C	D	REMARKS
FOOTING									
F101	15M	STR.	9.00m	75					
F102	15M	STR.	2.747m	217					
F103	20M	STR.	2.747m	405					
F104	15M	II		16	0.460m	1.36m	0.680m		
F105	15M	STR.	8.10m	30					
F106	15M	STR.	4.60m	8					
F107	15M	STR.	4.60m	6					
DOWEL									
D108	25M	I		206	2.845m	0.280m	0.200m	0.101m	DOWEL (EPOXY COATED)
D109	20M	I		206	1.627m	0.220m	0.160m	0.078m	DOWEL (EPOXY COATED)
PARAPET									
PP101	20M	III		208	1.550m	0.200m	1.550m		EPOXY COATED
PP102	10M	STR.	7.410m	8					EPOXY COATED
PP103	10M	STR.	7.700m	16					EPOXY COATED
PP104	10M	STR.	7.090m	24					EPOXY COATED
PP105	10M	STR.	2.925m	8					EPOXY COATED*
PP106	10M	IV		4	1.952m	0.800m	1.202m		EPOXY COATED
PP107	10M	STR.	7.500m	8					EPOXY COATED*
PP108	10M	STR.	1.458m	8	2.596m	0.800m	1.355m		EPOXY COATED*
PP109	10M	IV		4					EPOXY COATED
WALL									
W102	10M	STR.	VARIES 2.590m TO 2.815m	30					
W103	10M	STR.	VARIES 2.967m TO 2.598m	25					
W104	10M	STR.	VARIES 2.779m TO 2.417m	27					
W105	10M	STR.	VARIES 3.182m TO 2.779m	27					
W106	10M	STR.	VARIES 2.992m TO 2.532m	25					
W107	10M	STR.	VARIES 3.353m TO 2.992m	25					
W108	10M	STR.	VARIES 3.124m TO 3.353m	25					
W109	10M	STR.	7.408m	26					
W110	10M	STR.	7.700m	54					
W111	10M	STR.	7.086m	92					
W112	15M	STR.	1.719m	56					
W113	15M	STR.	1.934m	54					
W114	15M	STR.	2.466m	75					
W115	10M	STR.	2.925m	36					*
W116	10M	IV		18	1.952m	0.800m	1.202m		*
W117	15M	STR.	2.463m	21					
W118	10M	STR.	VARIES 3.863m TO 3.714m	18					
W119	15M	STR.	1.662m	12					
W120	15M	STR.	1.461m	12					
W121	15M	II		12	1.000m	VARIES 0.487m TO 0.454m	VARIES 1.483m TO 1.568m		
W122	10M	STR.	7.620m	24					
W123	15M	III		4	1.374m	0.200m	1.374m		
W124	10M	IV		18	VARIES 3.175m TO 2.886m	0.800m	VARIES 1.538m TO 1.780m		*
W125	15M	STR.	1488m	1					

* CONTRACTOR TO FIELD VERIFY DIMENSIONS BEFORE FABRICATING

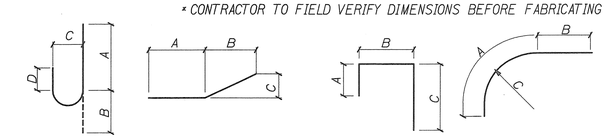

TYPE I TYPE II TYPE III TYPE IV

NOTES:

1. E.F. DENOTES EACH FACE.
   F.F. DENOTES FRONT FACE.
   R.F. DENOTES REAR FACE.
2. FOR LOCATION OF SECTIONS A-A AND A*-A* SEE SHEET B3.
3. FOR LOCATION OF SECTION C-C SEE SHEET B4.

NEW JERSEY DEPARTMENT OF TRANSPORTATION
BUREAU OF STRUCTURAL ENGINEERING

WALL 1
ELEVATION AND SECTIONS

ROUTE 9W
BOROUGH OF ENGLEWOOD CLIFFS

SECTION 1J
BERGEN COUNTY

CONTROL SECTION	0209	JOB NO.	0209508
DES. BY	P. DZWONCZYK	CHK. BY	M. MAVER
DWN. BY	T. ENRIGHT		
IN CHARGE OF	R. GIAMARIO		

REVISION	BY	CK'D.	DATE

LICHTENSTEIN CONSULTING ENGINEERS, INC.
RONALD GIAMARIO
N.J. P.E. LICENSE #31556

BRIDGE SHEET NO. B5 OF B10

133/138

FILE NAME: p:\1907\cadd\dgn\bridge\b5.dgn
DATE: 02 DEC 2002
USERNAME: ALiscian

STATE	FEDERAL PROJECT NO.	SHEET	TOTAL SHEETS
N.J.		134	138

STRUCTURE NO. N/A

STRUCTURE NAME WALL 1

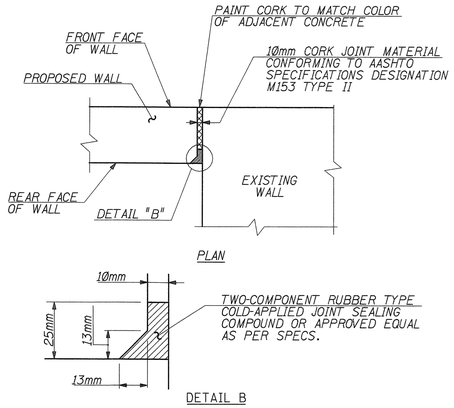

EXISTING WALL JOINT DETAIL
N.T.S.

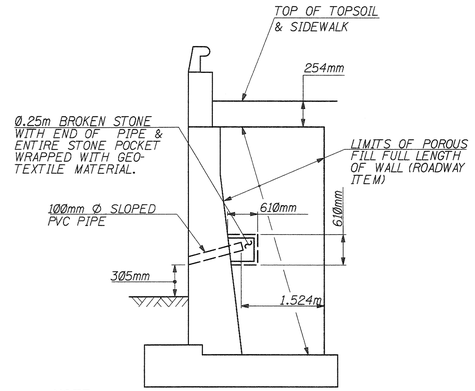

NOTE:
BROKEN STONE, PVC PIPE AND WRAPPED GEOTEXTILE ARE PAID FOR UNDER, "CONCRETE IN STRUCTURES, RETAINING WALLS."

WALL 1
POROUS FILL AND WEEPHOLE DETAIL
N.T.S.

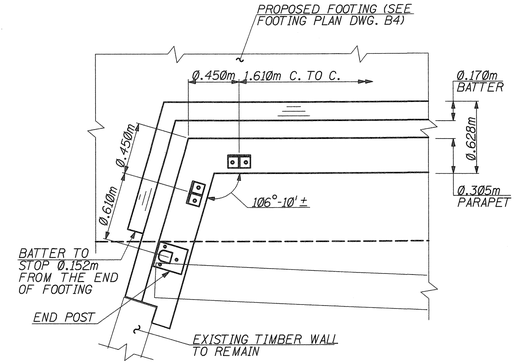

RAILING POST LOCATION (CANTILEVER PORTION)
1:25

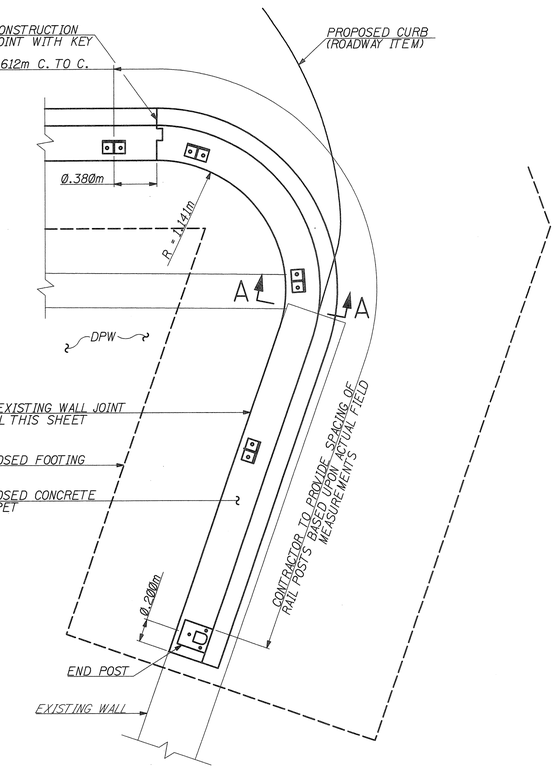

RAILING POST LOCATION (RADIAL PORTION)
1:25

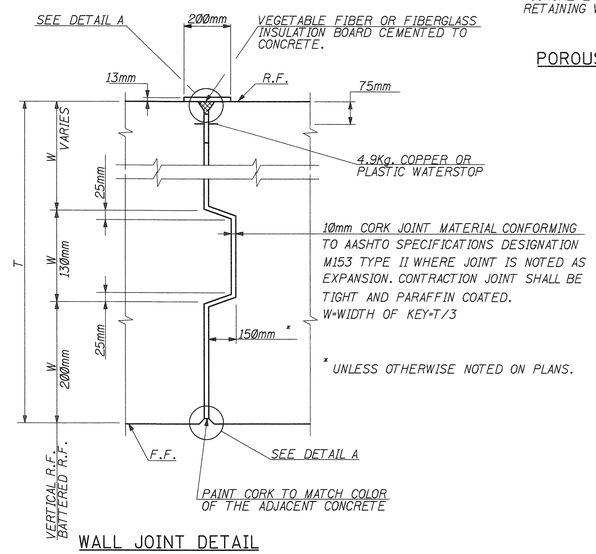

WALL JOINT DETAIL
N.T.S.

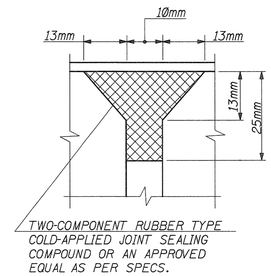

DETAIL "A"
N.T.S.

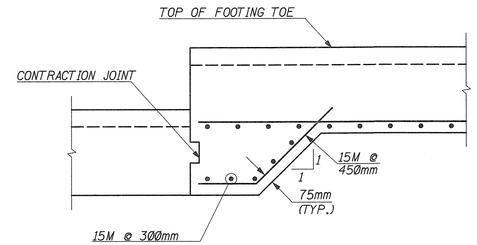

STEP DETAIL
1:25

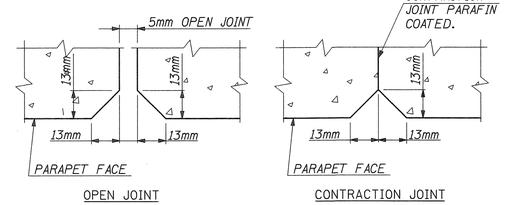

DETAILS OF PARAPET JOINT
N.T.S.

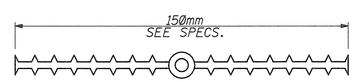

PLASTIC WATERSTOP DETAIL
N.T.S.

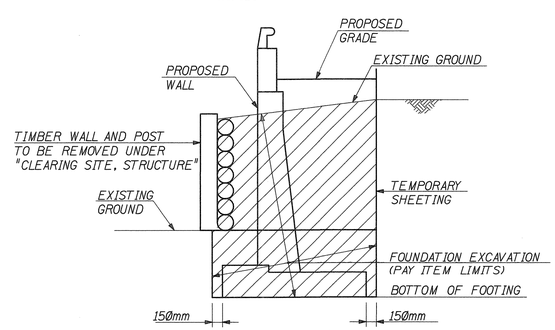

WALL 1
FOUNDATION EXCAVATION DETAIL
N.T.S.

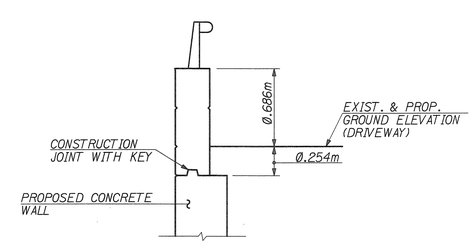

SECTION E-E
1:25

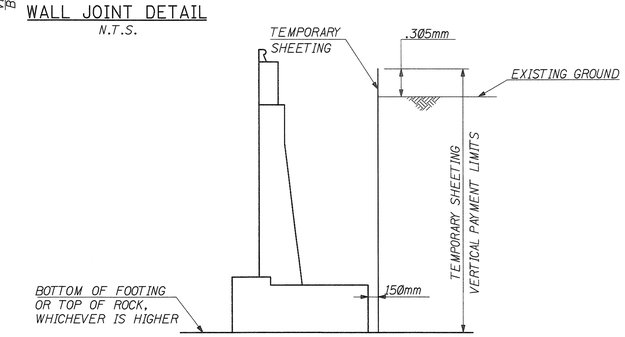

TYPICAL TEMPORARY SHEETING VERTICAL PAYMENT LIMITS
N.T.S.

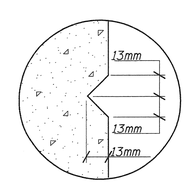

V SCORE LINE DETAIL
N.T.S.

NOTES:
1. SEE SHEET B4 FOR STEP LOCATIONS.
2. FOR RAILING DETAIL, SEE SHEET B-7.
3. CONSTRUCTION JOINT WITH KEY SHALL BE PAID UNDER PAY ITEM "CONCRETE IN STRUCTURES, RETAINING WALLS" FOR ALL THE WALLS.

1:25 0 1.25 2.5
SCALE IN METERS

CONTROL SECTION	0209	JOB NO. 0209508	
DES. BY	P. DZWONCZYK	CHK. BY	M. MAVER
DWN. BY	T. ENRIGHT		
IN CHARGE OF	R. GIAMARIO		

REVISION	BY	CK'D.	DATE

NEW JERSEY DEPARTMENT OF TRANSPORTATION
BUREAU OF STRUCTURAL ENGINEERING

WALL 1 DETAILS

ROUTE 9W
BOROUGH OF ENGLEWOOD CLIFFS

SECTION 1J
BERGEN COUNTY

LICHTENSTEIN CONSULTING ENGINEERS, INC.
RONALD GIAMARIO
N.J. P.E. LICENSE #31556

BRIDGE SHEET NO. B6 OF B10

134/138

FILE NAME: p:\1907\cadd\dgn\bridge\b6.dgn
DATE: 02 DEC 2002
USERNAME: ALiscion

STATE	FEDERAL PROJECT NO.	SHEET	TOTAL SHEETS
N.J.		135	138

STRUCTURE NO. N/A

STRUCTURE NAME WALL 1

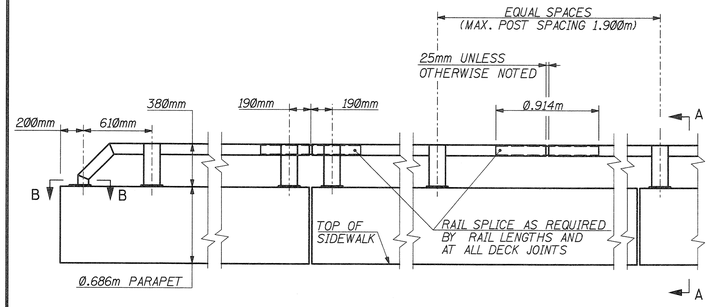

TYPICAL EXTERIOR ELEVATION OF CONTINUOUS RAILING SYSTEM
SCALE: 1:25

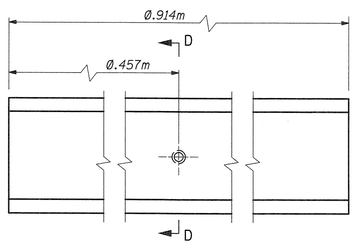

DETAIL OF RAIL SPLICE
SCALE: 1:20

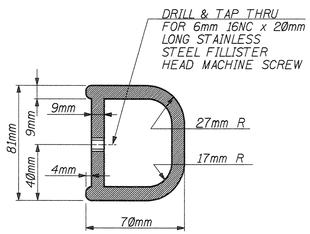

SECTION D-D
SCALE: 1:20

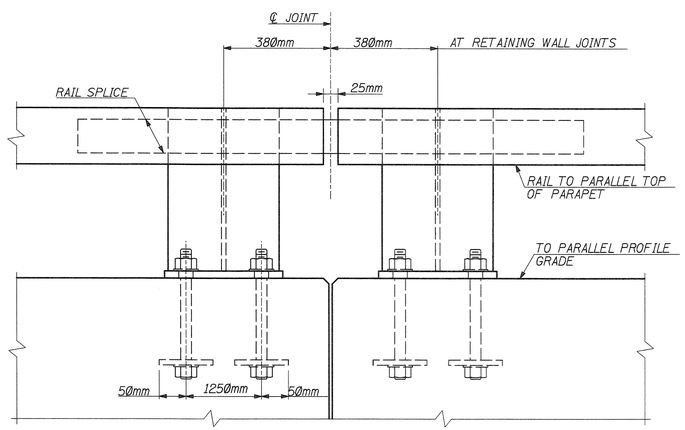

TYPICAL ELEVATION OF DOUBLE
POSTS AT EXPANSION JOINT
SCALE: 1:50

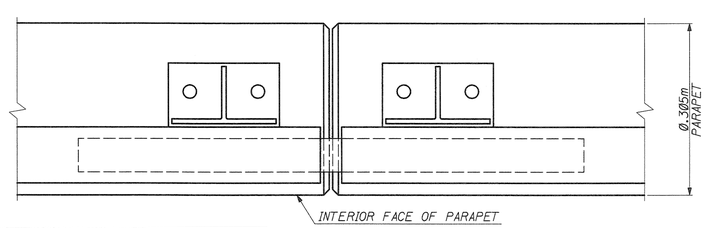

TYPICAL PLAN
SCALE: 1:50

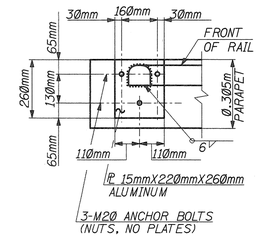

SECTION B-B
SCALE: 1:25

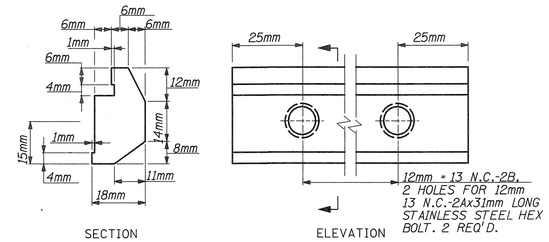

DETAILS OF RAIL CLAMP
SCALE: 1:10

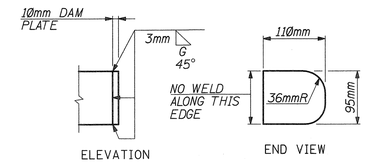

DAM PLATE DETAIL
SCALE: 1:5

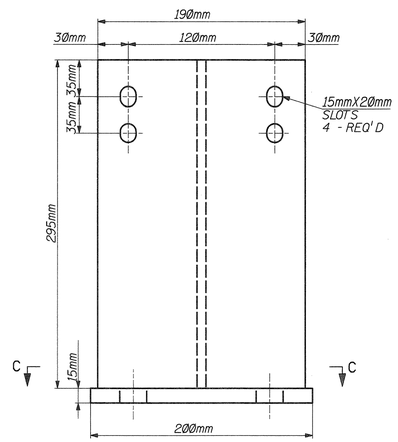

POST ELEVATION
SCALE: 1:25

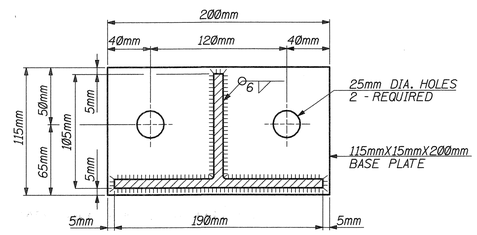

SECTION C-C
SCALE: 1:25

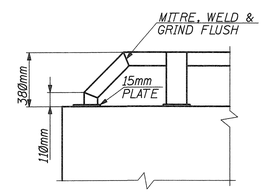

DETAIL 'A'
N.T.S.

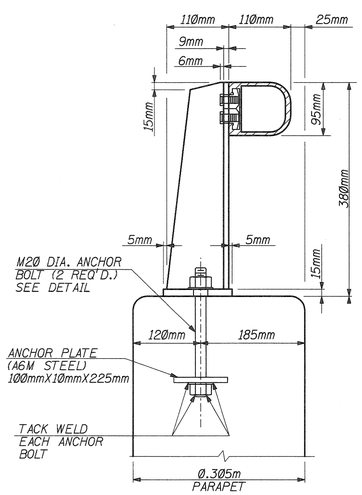

SECTION A-A
SCALE: 1:5

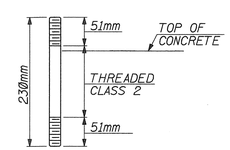

MATERIAL FOR ANCHOR BOLTS SHALL BE A.S.T.M. A276 STAINLESS STEEL, TYPE 302, TYPE 430 OR AS AN ALTERNATE. GRADE 250 STEEL MAY BE USED FOR EMBEDED PORTION. TOP NUTS SHALL BE ALUMINUM THICK NUTS A.S.T.M. B211-66 ALLOY 6061-T6 CLASS 2 THREAD. BOTTOM NUTS SHALL BE A.S.T.M. A325.

ANCHOR BOLT DETAIL
N.T.S.

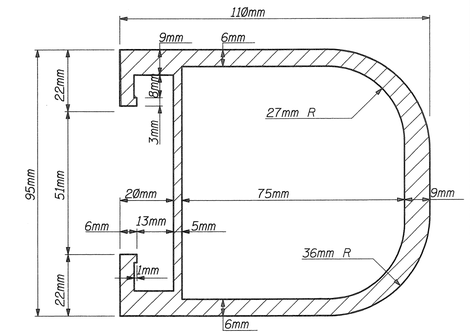

SECTION OF RAIL
SCALE: 1:10

GENERAL NOTES

1. MATERIAL FOR POSTS, BASES, RAILS AND RAIL CLAMPS SHALL BE ASTM B 221M, ALUMINUM ALLOY 6061-T6.
2. WASHERS SHALL BE A.S.T.M. B 209M, ALCLAD 2024-T3 AND NUTS SHALL BE ASTM B 211M, ALUMINUM ALLOY 6061-T6.
3. DAM PLATES SHALL BE USED TO CLOSE ALL OPEN RAILING ENDS. MATERIAL SHALL BE ASTM B 209M ALUMINUM ALLOY 6061-T6. AS AN ALTERNATE, DRIVE-IN END CAPS MAY BE USED. CAPS SHALL BE ALUMINUM ALLOY SAND MOLD CASTINGS COMPLYING WITH ASTM B 26M, ALLOY SG 70A-T6.

   END CAPS SHALL BE WELDED TO THE RAILS.
4. WHERE NECESSARY FOR POST ALIGNMENT, ALUMINUM ALLOY SHIM MATERIAL SHALL BE USED WHERE REQUIRED BY THE ENGINEER. SHIM MATERIAL SHALL BE ASTM B 209M, ALLOY 1100-0.
5. PAINT UNDERSIDE OF BASE WITH A HEAVY COAT OF ALUMINUM PIGMENTED ALKALINE RESISTANT BITUMINUS PAINT EQUAL TO FEDERAL SPACIFICATIONS TT-C-498C.
6. ALL ANCHOR BOLT HOLES AND SPACES BETWEEN BASE PLATES AND CONCRETE SHALL BE THOROUGHLY CAULKED WITH AN ALUMINUM IMPREGNATED CAULKING COMPOUND CONFORMING TO FEDERAL SPECIFICATIONS TT-C-598, CONSISTENCY GRADE 1.

QUANTITIES

PAY ITEM NO.	STANDARD ITEM NO.	DESCRIPTION	UNIT	CONTRACT QUANTITY
175	5H01E	METAL RAILING (I RAIL, ALUMINUM)	L.M.	60

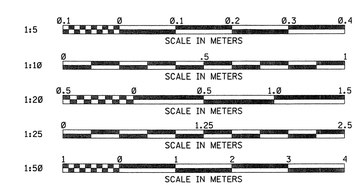

NEW JERSEY DEPARTMENT OF TRANSPORTATION
BUREAU OF STRUCTURAL ENGINEERING

SINGLE RAIL RAILING

ROUTE 9W
BOROUGH OF
ENGLEWOOD CLIFFS

SECTION 1J
BERGEN COUNTY

CONTROL SECTION	0209	JOB NO.	0209S08
DES. BY	P. DZWONCZYK	CHK. BY	M. MAVER
DWN. BY	T. ENRIGHT		
IN CHARGE OF	R. GIAMARIO		

REVISION	BY	CK'D.	DATE

LICHTENSTEIN CONSULTING ENGINEERS, INC.
RONALD GIAMARIO
N.J. P.E. LICENSE #31556

BRIDGE SHEET NO. B7 OF B10

135
138

FILE NAME: p:\1907\cadd\dgn\bridge\b7.dgn
DATE: 02 DEC 2002
USERNAME: ALiscion

STATE	FEDERAL PROJECT NO.	SHEET	TOTAL SHEETS
N.J.		136	138

STRUCTURE NO. N/A

STRUCTURE NAME WALL 2

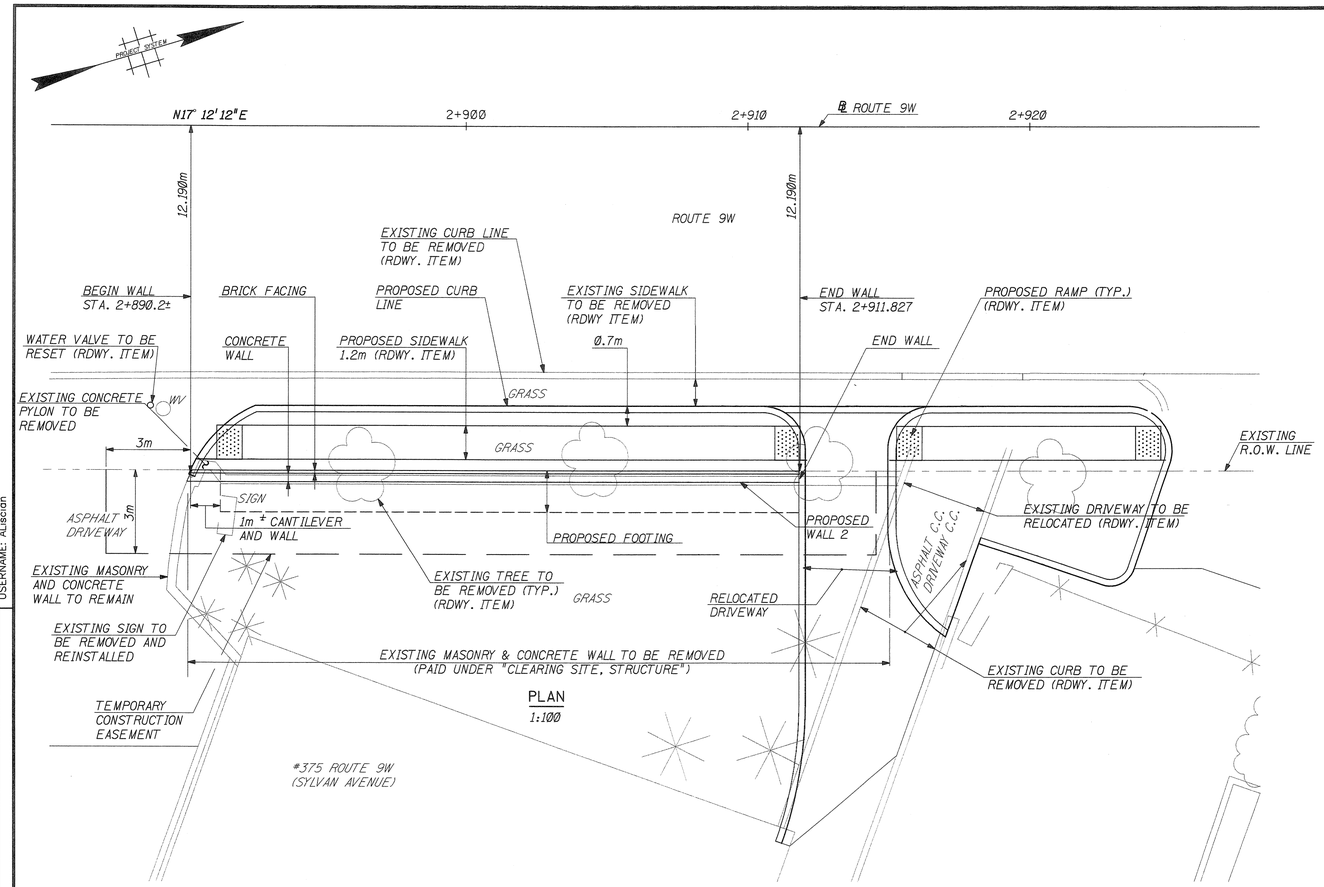

PLAN

1:100

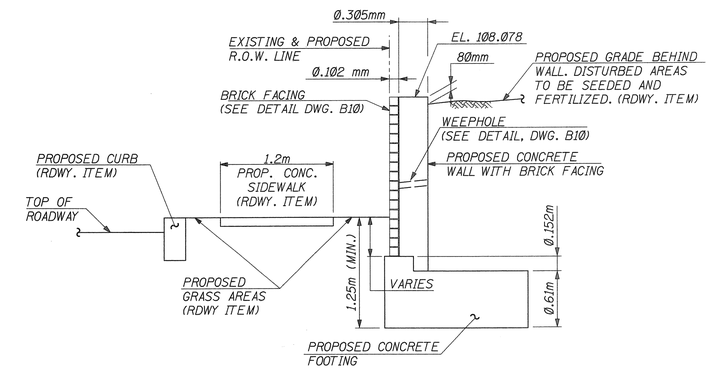

TYPICAL SECTION

1:30

ESTIMATE OF STRUCTURE REMOVAL QUANTITIES

DESCRIPTION	QUANTITY
MASONRY AND CONCRETE WALL	65 S.M.
CONCRETE END PYLON	1 UNIT

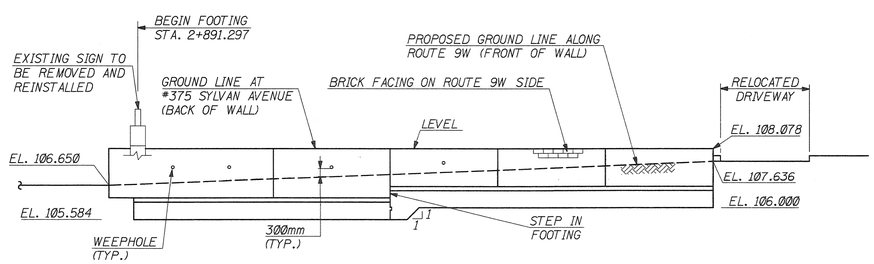

ELEVATION (BACK OF WALL)

1:100

SUMMARY OF QUANTITIES

PAY ITEM NO.	STANDARD ITEM NO.	DESCRIPTION	UNIT	CONTRACT QUANTITY
178	2A41C	CLEARING SITE, STRUCTURE	L.S.	L.S.
179	2F12E	FOUNDATION EXCAVATION	C.M.	85
180	5A21A	CONCRETE IN STRUCTURES, FOOTINGS	C.M.	22
181	5A21E	REINFORCEMENT STEEL IN STRUCTURES	KG	925
182	5A31A	CONCRETE IN STRUCTURES, RETAINING WALLS	C.M.	11
183	5A31E	REINFORCEMENT STEEL IN STRUCTURES, EPOXY COATED	KG	375
184	N5W01	BRICK FACING	S.M.	36

INDEX OF DRAWINGS

NO.	TITLE
B7	GENERAL PLAN AND ELEVATION - WALL 2
B8	WALL 2 - PLAN AND ELEVATION
B9	WALL 2 - DETAILS AND SECTIONS

NOTES:

1. FOR GENERAL NOTES SEE DWG. B1.
2. ESTIMATE OF STRUCTURE REMOVAL QUANTITIES IS FOR INFORMATIONAL PURPOSES ONLY, AND IS NOT GUARANTEED TO BE CORRECT. BIDDERS SHALL VISIT THE SITE PRIOR TO SUBMITTING BIDS TO ASCERTAIN THE EXTENT OF THE WORK.

1:30 1 0 1 2 SCALE IN METERS

1:100 0 5 10 SCALE IN METERS

NEW JERSEY DEPARTMENT OF TRANSPORTATION
BUREAU OF STRUCTURAL ENGINEERING

GENERAL PLAN AND ELEVATION WALL 2

ROUTE 9W
BOROUGH OF ENGLEWOOD CLIFFS

SECTION 1J
BERGEN COUNTY

CONTROL SECTION	0209	JOB NO. 0209508	
DES. BY	P. DZWONCZYK	CHK. BY	M. MAVER
DWN. BY	T. ENRIGHT		
IN CHARGE OF	R. GIAMARIO		

REVISION	BY	CK'D.	DATE

LICHTENSTEIN CONSULTING ENGINEERS, INC.
RONALD GIAMARIO
N.J. P.E. LICENSE #31556

BRIDGE SHEET NO. B8 OF B10

136 / 138

FILE NAME: p:\1907\cadd\dgn\bridge\b8.dgn
DATE: 03 DEC 2002
USERNAME: Alascian

STATE	FEDERAL PROJECT NO.	SHEET	TOTAL SHEETS
N.J.		137	138

STRUCTURE NO. N/A

STRUCTURE NAME WALL 2

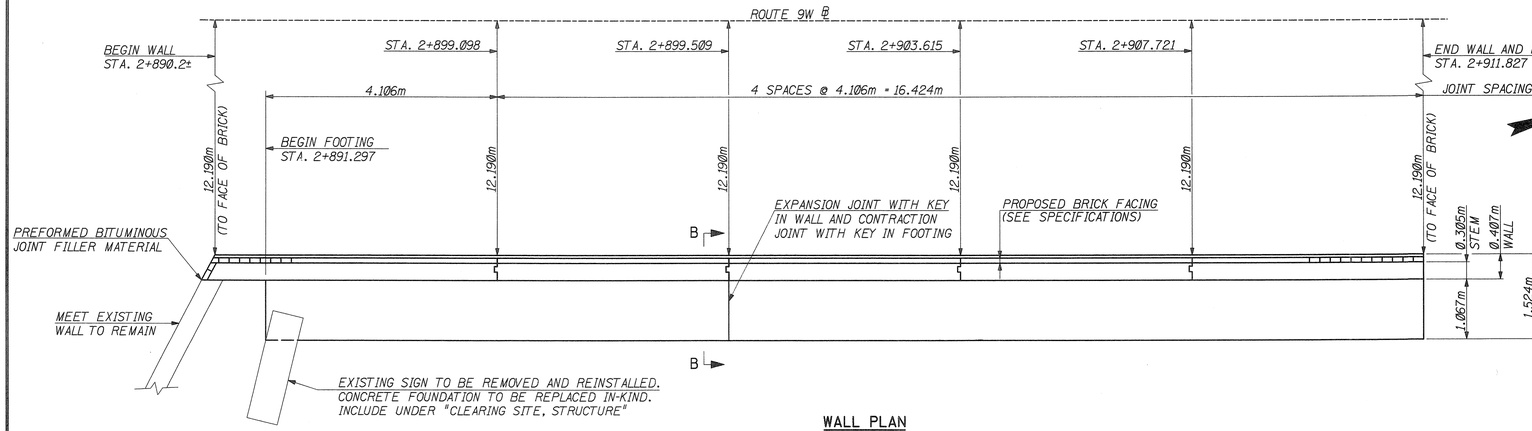

WALL PLAN
1:50

REINFORCEMENT BAR LIST

MARK	SIZE	TYPE	LENGTH	TOTAL	A	B	C	D	REMARKS
FOOTING									
F201	15M	STR.	8.062m	9					
F202	15M	STR.	6.600m	18					
F203	15M	STR.	1.374m	126					
F204	15M	II		5	0.535m	1.230m	0.550m		
DOWEL									
D201	15M	I		42	1.928m	0.180m	0.130m	0.064m	DOWEL (EPOXY COATED)
D202	15M	I		28	2.344m	0.180m	0.130m	0.064m	DOWEL (EPOXY COATED)
D203	10M	I		39	1.928m	0.140m	0.090m	0.045m	DOWEL (EPOXY COATED)
D204	10M	I		26	2.344m	0.140m	0.090m	0.045m	DOWEL (EPOXY COATED)
WALL									
W206	10M	STR.	3.956m	74					
W207	15M	III		10	1.100m	0.200m	1.100m		
W208	15M	IV		8	1.700m	0.200m	1.700m		
W209	15M	STR.	1.700m	2					
W210	15M	III		5	0.363m	0.100m	0.363m		

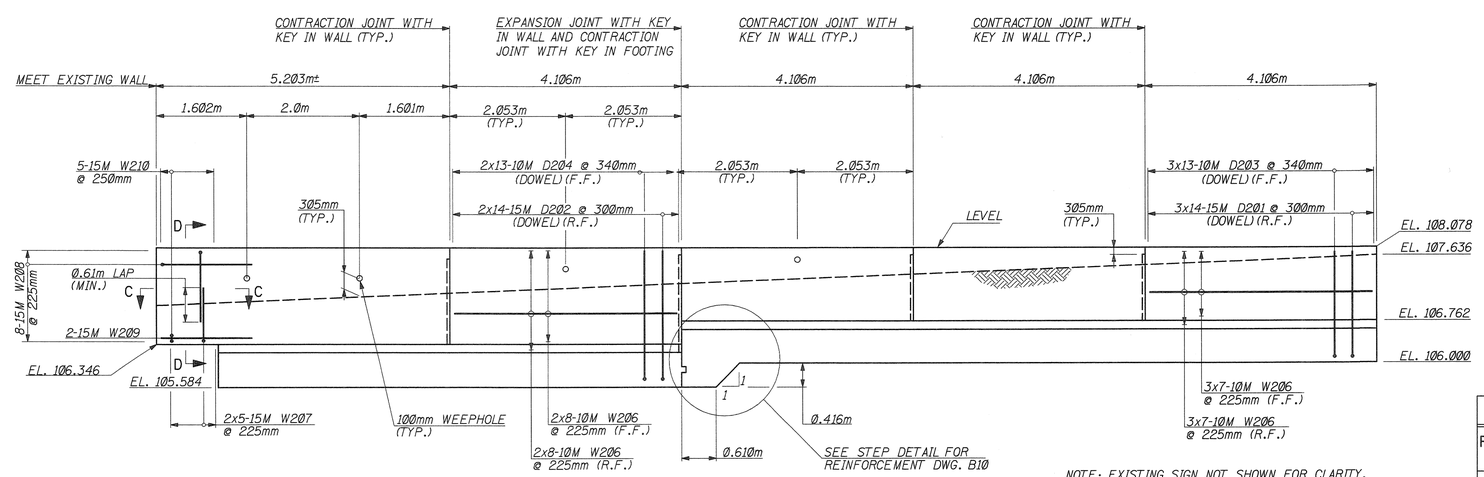

NOTE: EXISTING SIGN NOT SHOWN FOR CLARITY.

ELEVATION
1:50

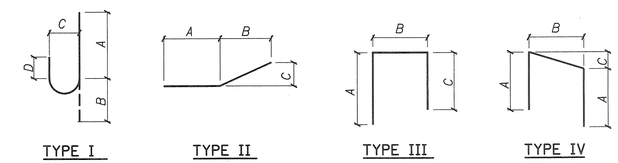

QUANTITIES

PAY ITEM NO.	STANDARD ITEM NO.	DESCRIPTION	UNIT	CONTRACT QUANTITY
179	2F12E	FOUNDATION EXCAVATION	C.M.	85
180	5A21A	CONCRETE IN STRUCTURES, FOOTINGS	C.M.	22
181	5A21E	REINFORCEMENT STEEL IN STRUCTURES	KG.	925
182	5A31A	CONCRETE IN STRUCTURES, RETAINING WALLS	C.M.	11
183	5A21E	REINFORCEMENT STEEL IN STRUCTURES, EPOXY COATED	KG.	375
184	N5W01	BRICK FACING	S.M.	36

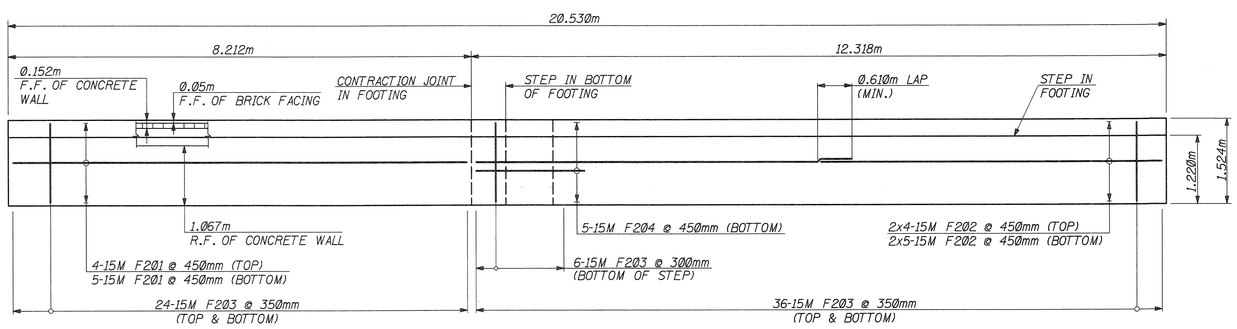

FOOTING PLAN
1:50

NOTES:

1. R.F. DENOTES REAR FACE.
   F.F. DENOTES FRONT FACE.
   E.F. DENOTES EACH FACE.
2. SEE DWG. B10 FOR SECTIONS B–B, C–C AND D–D.

1:50 SCALE IN METERS

CONTROL SECTION	0209	JOB NO. 0209508	
DES. BY	P. DZWONCZYK	CHK. BY	M. MAVER
DWN. BY	T. ENRIGHT		
IN CHARGE OF	R. GIAMARIO		

REVISION	BY	CK'D.	DATE

NEW JERSEY DEPARTMENT OF TRANSPORTATION
BUREAU OF STRUCTURAL ENGINEERING

WALL 2
PLAN AND ELEVATION

ROUTE 9W
BOROUGH OF
ENGLEWOOD CLIFFS

SECTION 1J
BERGEN COUNTY

LICHTENSTEIN CONSULTING ENGINEERS, INC.
RONALD GIAMARIO
N.J. P.E. LICENSE #31556

BRIDGE SHEET NO. B9 OF B10

137
138

FILE NAME: p:\1907\cadd\dgn\bridge\b9.dgn
DATE: 03 DEC 2002
USERNAME: ALiscian

STATE	FEDERAL PROJECT NO.	SHEET	TOTAL SHEETS
N.J.		138	138

STRUCTURE NO. N/A

STRUCTURE NAME WALL 2

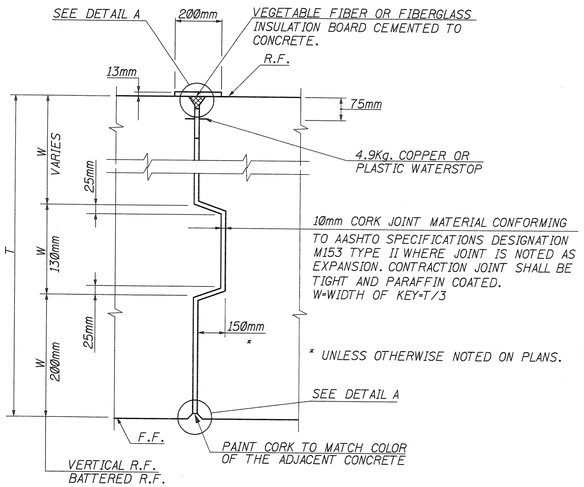

WALL JOINT DETAIL
N.T.S.

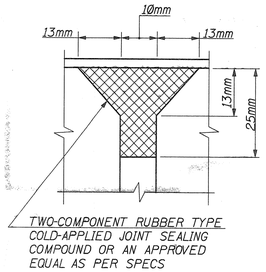

DETAIL "A"
N.T.S.

PLASTIC WATERSTOP DETAIL
N.T.S.

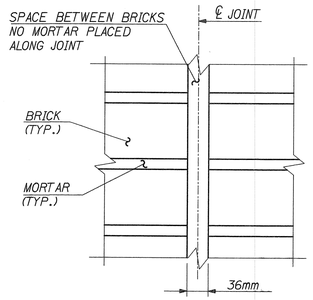

DETAIL B
N.T.S.

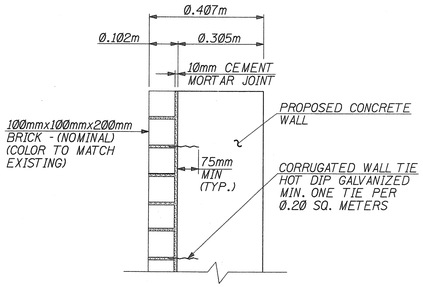

BRICK FACING DETAIL
1:10

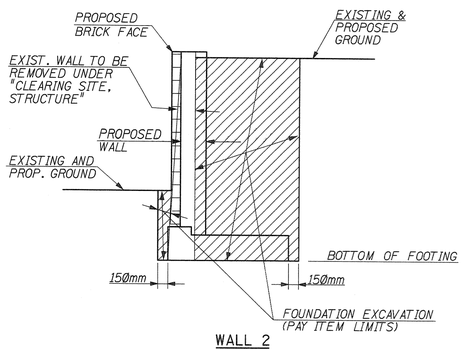

WALL 2
FOUNDATION EXCAVATION DETAIL
N.T.S.

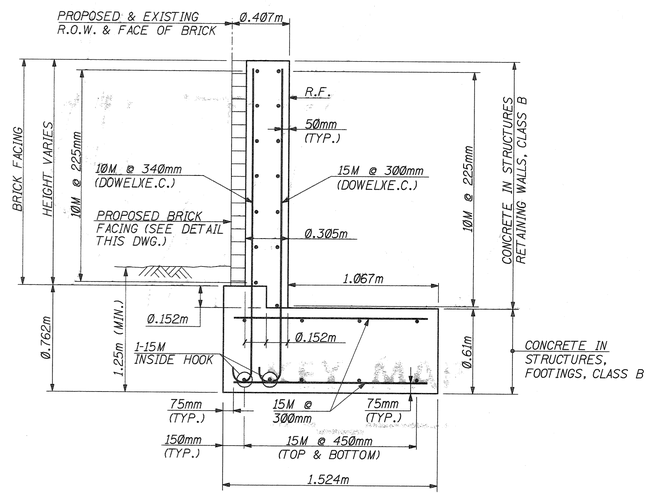

PROPOSED WALL SECTION B-B
1:20

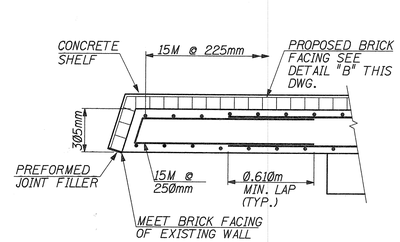

SECTION C-C
1:20

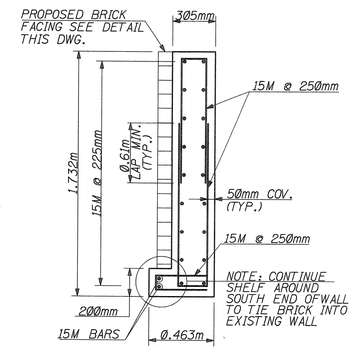

SECTION D-D
1:20

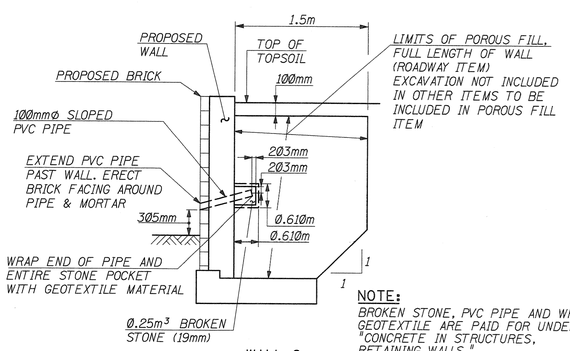

NOTE:
BROKEN STONE, PVC PIPE AND WRAPPED GEOTEXTILE ARE PAID FOR UNDER. "CONCRETE IN STRUCTURES, RETAINING WALLS."

WALL 2
POROUS FILL AND WEEPHOLE DETAILS
N.T.S.

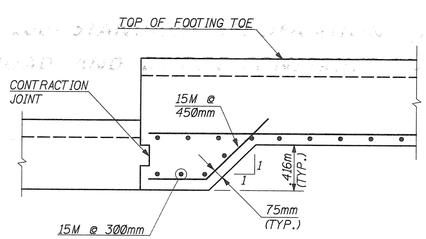

STEP DETAIL
1:25

NOTES:

1. E.F. DENOTES EACH FACE. F.F. DENOTES FRONT FACE. R.F. DENOTES REAR FACE.
2. FOR LOCATION OF SECTION B-B, SECTION C-C AND SECTION D-D SEE DWG. B9.
3. SEE SHEET B9 FOR STEP LOCATION.

1:20 0.5 0 0.5 1.0 1.5 SCALE IN METERS

1:25 0.5 0 0.5 1.0 2.0 SCALE IN METERS

REVISION	BY	CK'D.	DATE

NEW JERSEY DEPARTMENT OF TRANSPORTATION
BUREAU OF STRUCTURAL ENGINEERING

WALL 2
DETAILS AND SECTIONS

ROUTE 9W
BOROUGH OF ENGLEWOOD CLIFFS

SECTION 1J
BERGEN COUNTY

LICHTENSTEIN CONSULTING ENGINEERS, INC.
RONALD GIAMARIO
N.J. P.E. LICENSE #31556

BRIDGE SHEET NO. B10 OF B10

138
138

CONTROL SECTION	0209	JOB NO. 0209508	
DES. BY	P. DZWONCZYK	CHK. BY	M. MAVER
DWN. BY	T. ENRIGHT		
IN CHARGE OF	R. GIAMARIO		

FILE NAME: p:\1907\cadd\dgn\bridge\b10.dgn
DATE: 02 DEC 2002
USERNAME: ALiscian