STATE	FEDERAL PROJECT NO.
N.J.	

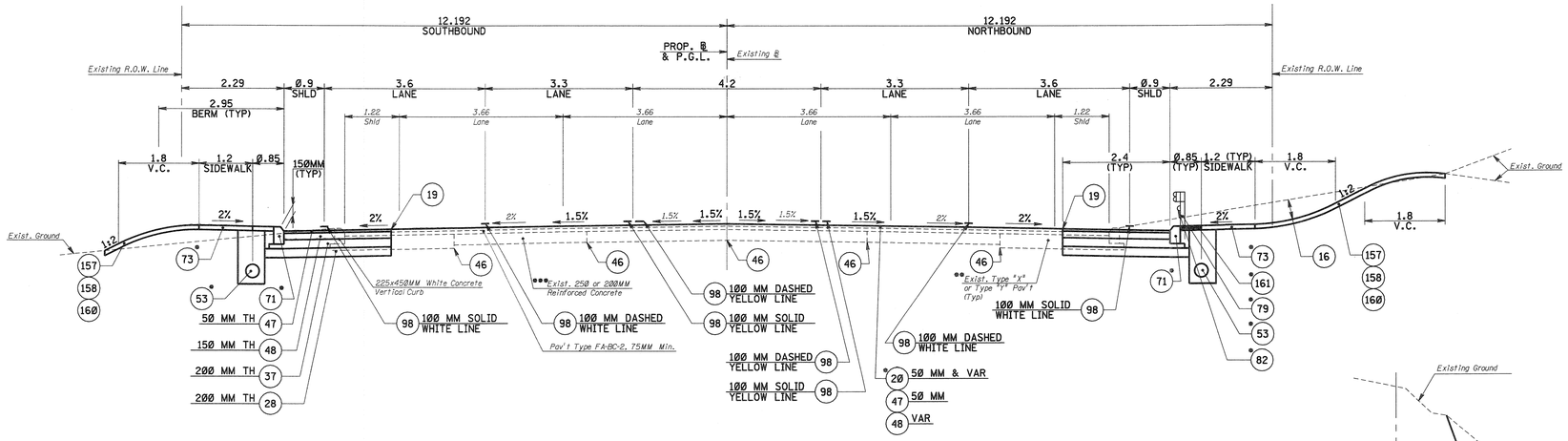

ROUTE 9W NORMAL SECTION

STA. 2+002 TO STA. 3+671±
STA. 3+977± TO STA. 4+011±
STA. 4+257± TO STA. 4+285

N.T.S.

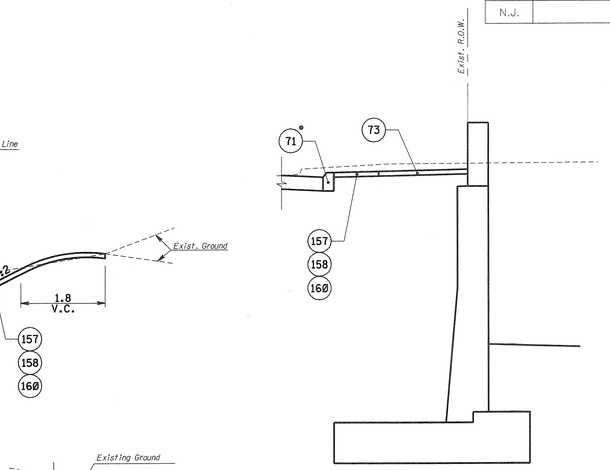

RETAINING WALL NO. 1

STA. 2+774± TO STA. 2+829±

N.T.S.

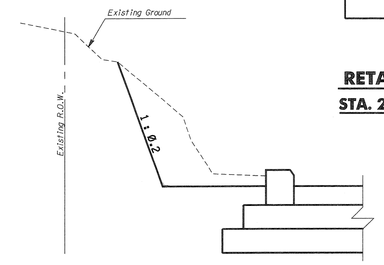

ROCK SLOPE DETAIL

STA. 2+860± TO STA. 2+940±

N.T.S.

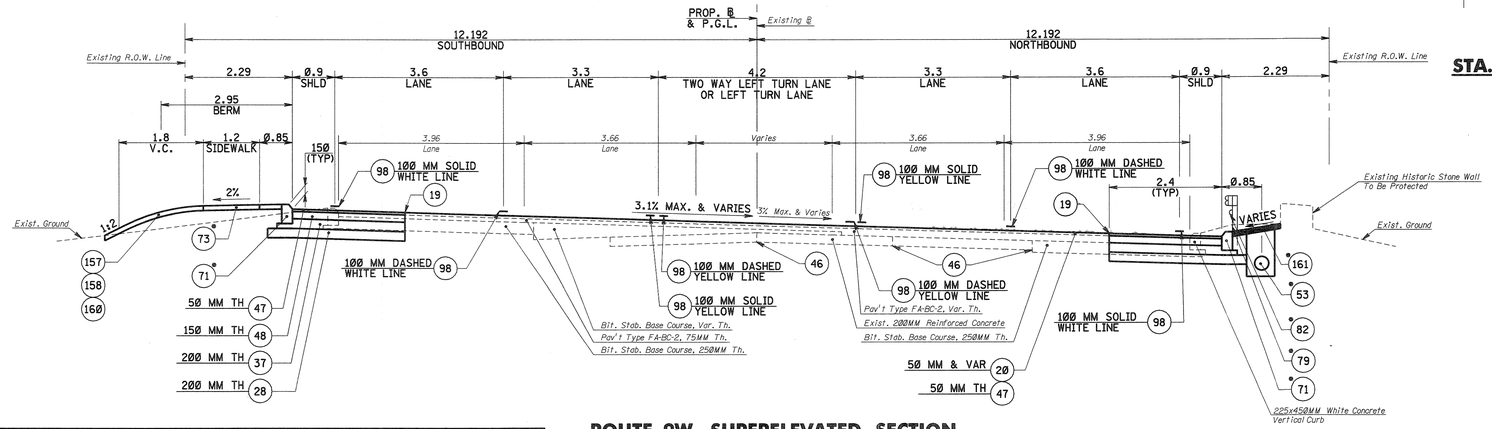

ROUTE 9W SUPERELEVATED SECTION

STA. 3+671± TO STA. 3+977±

N.T.S.

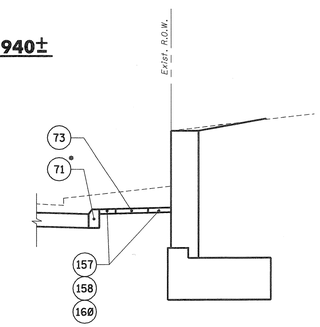

RETAINING WALL NO. 2

STA. 2+890± TO STA. 2+912±

N.T.S.

LEGEND OF MATERIALS		
PAY ITEM NO.	STD. ITEM NO.	PROPOSED MATERIALS
16	2B25B	ROADWAY EXCAVATION, UNCLASSIFIED
19	2B50G	SAWCUTTING
20	2B25N	MILLING, 50 MM VARIABLE DEPTH
28	2H21C	SUBBASE, DESIGNATION I-3
37	3A20D	DENSE GRADED AGGREGATE BASE COURSE, 200 MM THICK
46	4D31F	SAWING AND SEALING JOINTS IN HOT MIX ASPHALT OVERLAY
47	4F02A	SUPERPAVE HOT MIX ASPHALT 12.5H76 SURFACE COURSE
48	4F03C	SUPERPAVE HOT MIX ASPHALT 25H64 BASE COURSE
53	6A21D	UNDERDRAIN, TYPE F
71	6E15D	225 BY 450 MM CONCRETE VERTICAL CURB
73	6G10C	CONCRETE SIDEWALK, 100 MM THICK
79	6L21B	BEAM GUIDE RAIL
82	6L11F	RUB RAIL
99	6R22C	TRAFFIC STRIPES, LONG LIFE, EPOXY RESIN
157	8F04C	TOPSOILING, 100 MM THICK
158	8H23C	FERTILIZING AND SEEDING, TYPE A-3
160	8K31C	STRAW MULCHING
161	8N05B	NONVEGETATIVE SURFACE, HOT MIX ASPHALT

Pav't Type FA-BC-2, 75MM Th.
Bit. Stab. Base Course, 250MM Th.

EXISTING TYPE "X" PAV'T
N.T.S.

Pav't Type FA-BC-2, Var. Th.
Conc. Base Course 200MM Th.
Subbase (Type 1, Class A), 150MM Th.

EXISTING TYPE "Y" PAV'T
N.T.S.

*WHERE SHOWN ON PLANS
**STA. 2+002± TO STA. 3+390± (TYPE "X"), STA. 3+390± TO STA. 3+560±(TYPE "Y")
***STA. 2+002± TO STA. 3+560± (250MM), STA. 3+560± TO STA. 3+671± (200MM)

ALL DIMENSIONS SHOWN IN THIS SHEET ARE IN METERS UNLESS OTHERWISE NOTED

TS-1 / TS-2

NEW JERSEY DEPARTMENT OF TRANSPORTATION

TYPICAL SECTION

ROUTE 9W — SECTION 1J

LICHTENSTEIN CONSULTING ENGINEERS, INC.
RONALD GIAMARIO
N.J. P.E. LICENSE #31556

FILE NAME: p:\1907\cadd\dgn\1907htp.dgn
DATE: 02 DEC 2002
USERNAME: ALiscian

PREPARED BY: G. MENZEL
REVIEWED BY: A. GHATTAS
DRAWN BY: A. LISCIANDRELLO

STATE	FEDERAL PROJECT NO.
N.J.	

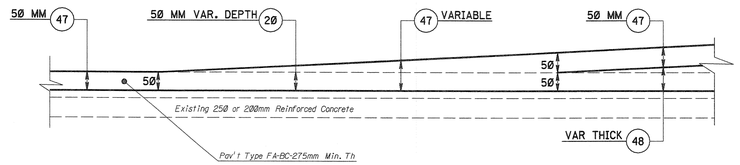

MILLING AND RESURFACING DETAIL

N.T.S.

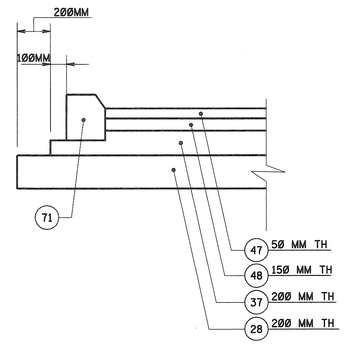

PAVEMENT STEPPING DETAIL

N.T.S.

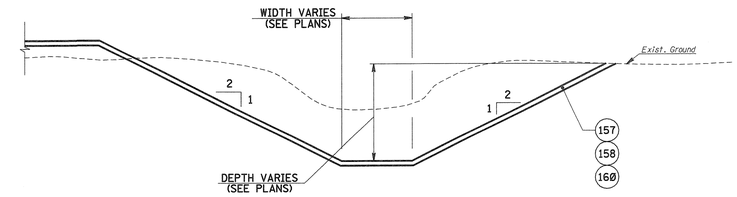

TYPICAL SECTION-DITCH

STA. 2+535 TO STA. 2+590

N.T.S.

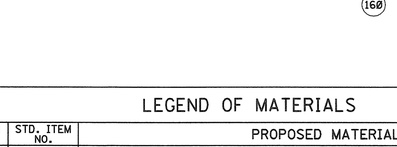

BITUMINOUS CONCRETE DRIVEWAY, VARIABLE THICK

N.T.S.

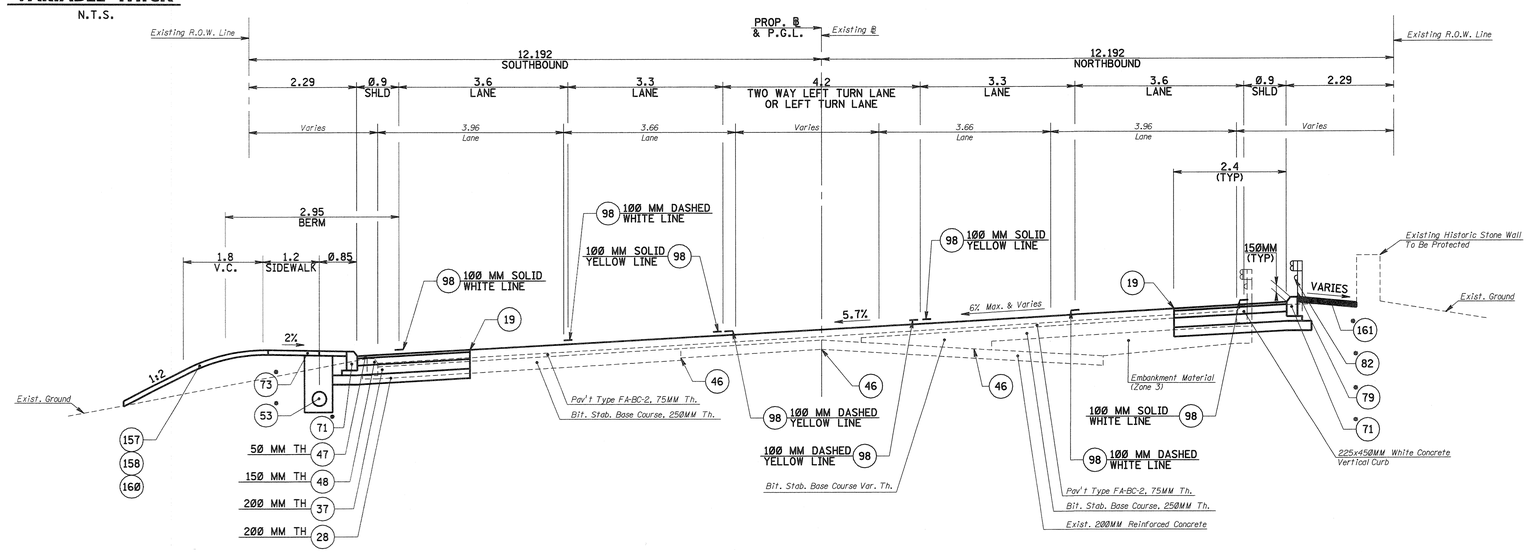

ROUTE 9W SUPERELEVATED SECTION

STA. 4+011± TO STA. 4+257±

N.T.S.

LEGEND OF MATERIALS

PAY ITEM NO.	STD. ITEM NO.	PROPOSED MATERIALS
19	2B50G	SAWCUTTING
20	2B25N	MILLING, 50 MM VARIABLE DEPTH
28	2H21C	SUBBASE, DESIGNATION I-3
37	3A20D	DENSE GRADED AGGREGATE BASE COURSE, 200 MM THICK
47	4F02A	SUPERPAVE HOT MIX ASPHALT 12.5H76 SURFACE COURSE
48	4F03C	SUPERPAVE HOT MIX ASPHALT 25H64 BASE COURSE
53	6A21D	UNDERDRAIN, TYPE F
71	6E15D	225 BY 450 MM CONCRETE VERTICAL CURB
73	6G10C	CONCRETE SIDEWALK, 100 MM THICK
74	6G60E	HOT MIX ASPHALT DRIVEWAY, VARIABLE THICKNESS
79	6L21B	BEAM GUIDE RAIL
99	6R22C	TRAFFIC STRIPES, LONG LIFE, EPOXY RESIN
157	8F04C	TOPSOILING, 100 MM THICK
158	8H23C	FERTILIZING AND SEEDING, TYPE A-3
160	8K31C	STRAW MULCHING
161	8N05B	NONVEGETATIVE SURFACE, HOT MIX ASPHALT

*WHERE SHOWN ON PLANS

FILE NAME: p:\1907\cadd\dgn\1907htp.dgn
DATE: 02 DEC 2002
USERNAME: ALiscian

PREPARED BY: G. MENZEL
REVIEWED BY: A. GHATTAS
DRAWN BY: A. LISCIANDRELLO

ALL DIMENSIONS SHOWN IN THIS SHEET ARE IN METERS UNLESS OTHERWISE NOTED

TS-2 / TS-2

NEW JERSEY DEPARTMENT OF TRANSPORTATION

TYPICAL SECTION

ROUTE 9W SECTION 1J

LICHTENSTEIN CONSULTING ENGINEERS, INC.

RONALD GIAMARIO

N.J. P.E. LICENSE #31556