SPECIAL PROVISIONS
&
SUPPLEMENTAL SPECIFICATIONS

CSI-Inch/Pound

Project No:	**S-I15-1(113)5**
PIN Desc:	**I-15; Brigham Road to Dixie Drive**
Concept:	**Widen Existing Facility**
Location:	**I-15; MP 4.49 - 5.78**
County:	**WASHINGTON**
Bid Opening:	**December 06, 2016**

Date

MANDATORY PRE-BID CONFERENCE

Date: November 22, 2016

Time: 09:00 am

Location: UDOT ST GEORGE OFFICE, 5340 W 200 S HURRICANE, UT

Conference attendance is a requirement for bid submission.

THIS IS A P&T (PRICE + TIME) PROJECT.

ELECTRONIC 3D CADD FILE/MODELS PROVIDED FOR INFORMATION ONLY ON PROJECT EXPLORER.

PROJECT # S-I15-1(113)5
PIN # 12780

May 12, 2016

2012 - Standards

Table of Contents

I. Statement of 2012 Standard Specifications and Standard Drawings for Road and Bridge Construction applicability

II. List of Supplemental Drawings **(May 12, 2016)**

III. Materials Minimum Sampling and Testing

IV. Notice to Contractors

V. Bidding Schedule

VI. Measurement and Payment

VII. Standard Drawing Index **(May 12, 2016)**

VIII. Equal Opportunity (State Projects)

IX. Title VI Appendix A and E

X. Special Provisions and Supplemental Specifications **(May 12, 2016)**

State Projects With Full Size Plan Sheets

	Section No.	Title – Type (current date)
1.	00120M	Bidding Requirements and Conditions – Supplemental Specification (02/26/15)
2.	00221S	Bidding Contract Time – Innovative Contracting (P+T) Special Provision (Calendar Day Projects) (07/08/15)
3.	00222S	Lane Rental – Innovative Contracting Special Provision (02/07/11)
4.	00250S	Prebid Conference – Department Special Provision (01/01/12)
5.	00515M	Contract Award and Execution – Construction Special Provision, Innovative Contracting (P+T) Special Provision (02/26/15)
6.	00515M	Contract Award and Execution – Supplemental Specification (02/26/15)
7.	00555M	Prosecution and Progress – Project Special Provision (08/08/16)
8.	00570M	Definitions – Project Special Provision (09/15/16)
9.	00570M	Definitions – Supplemental Specification (10/22/15)
10.	00725M	Scope of Work – Innovative Contracting (P+T) Special Provision (03/12/15)
11.	00727M	Control of Work – Supplemental Specification (10/22/15)
12.	00820M	Legal Relations and Responsibility to the Public – Project Special Provision (08/08/16)
13.	00820M	Legal Relations and Responsibility to the Public – Supplemental Specification (08/27/15)
14.	01282M	Payment – Supplemental Specification (08/27/15)
15.	01315S	Public Information Services – Project Special Provision (10/18/16)
16.	01355M	Environmental Compliance – Supplemental Specification (10/31/13)
17.	01452M	Pavement Smoothness – Supplemental Specification (06/25/15)
18.	01455M	Material Quality Requirements – Materials Special Provision (04/13/16)
19.	01455M	Material Quality Requirements – Supplemental Specification (02/25/16)
20.	01456M	Materials Dispute Resolution – Supplemental Specification (02/28/13)
21.	01554M	Traffic Control – Project Special Provision (08/08/16)
22.	01554M	Traffic Control – Supplemental Specification (11/06/14)
23.	01571M	Temporary Environmental Controls – Project Special Provision (08/08/16)
24.	01571	Temporary Environmental Controls – Supplemental Specification (06/25/15)
25.	01572M	Dust Control and Watering – Project Special Provision (08/08/16)
26.	01721M	Survey – Project Special Provision (08/08/16)
27.	01721	Survey – Supplemental Specification (02/25/16)
28.	01727S	Preconstruction Inspection – Project Special Provision (08/08/16)
29.	02056M	Embankment, Borrow, and Backfill – Project Special Provision (08/08/16)

30.	02056M	Embankment, Borrow, and Backfill – Supplemental Specification (04/30/15)
31.	02072S	Geogrid – Sub-Grade Stabilization – Materials Special Provision (03/12/14)
32.	02075M	Geotextiles – Project Special Provision (10/17/16)
33.	02075M	Geotextiles – Supplemental Specification (04/30/15)
34.	02221M	Remove Structure and Obstruction – Project Special Provision (08/08/16)
35.	02229S	Temporary Retaining Walls – Project Special Provision (09/06/16)
36.	02316M	Roadway Excavation – Project Special Provision (10/17/16)
37.	02316M	Roadway Excavation – Supplemental Specification (06/26/14)
38.	02317M	Structural Excavation – Supplemental Specification (02/27/14)
39.	02371S	Flexible Concrete Block Mat – Project Special Provision (10/17/16)
40.	02373M	Riprap – Project Special Provision (10/17/16)
41.	02373M	Riprap – Supplemental Specification (06/27/13)
42.	02455M	Driven Piles – Project Special Provision (10/13/16)
43.	02466M	Drilled Shafts – Project Special Provision (10/24/16)
44.	02467S	Jet Grouting – Project Special Provision (09/05/16)
45.	02468S	Drilled Shafts for Bridges – Project Special Provision (10/13/16)
46.	02610	Drainage Pipe – Supplemental Specification (02/27/14)
47.	02612S	Trenchless Pipe Installation – Project Special Provision (09/14/16)
48.	02621S	Core and Grout Connection – Project Special Provision (08/09/16)
49.	02631S	Stormwater Treatment Hood – Project Special Provision (09/15/16)
50.	02633M	Concrete Drainage Structures – Project Special Provision (08/09/16)
51.	02633M	Concrete Drainage Structures – Supplemental Specification (10/22/15)
52.	02645M	Precast Concrete Box and Three-Sided Culvert Structures – Supplemental Specification (10/22/15)
53.	02735M	Micro-Surfacing – Materials Special Provision (12/16/14)
54.	02737S	Soft Spot Repair – Project Special Provision (08/09/16)
55.	02741M	Hot Mix Asphalt (HMA) – Materials Special Provision (09/08/14)
56.	02742S	Project Specific Surfacing Requirements – Department Special Provision (06/30/15)
57.	02744S	Stone Matrix Asphalt (SMA) – Materials Special Provision (06/30/15)
58.	02746M	Hydrated Lime – Materials Special Provision (11/14/12)
59.	02748M	Prime Coat/Tack Coat – Supplemental Specification (10/22/15)
60.	02761	Longitudinal Rumble Strip – Supplemental Specification (04/30/15)
61.	02765M	Pavement Marking Paint – Materials Special Provision (10/05/15)
62.	02765M	Pavement Marking Paint – Supplemental Specification (02/26/15)
63.	02768M	Pavement Marking Materials – Supplemental Specification (08/29/13)
64.	02776	Concrete Flatwork – Supplemental Specification (02/25/16)
65.	02821M	Chain Link Fencing and Gates – Supplemental Specification (02/28/13)

66.	02822M	Right-of-Way Fence and Gate – Supplemental Specification (08/30/12)
67.	02831S	Retaining Wall – Alternate Systems – Project Special Provision (08/11/16)
68.	02832S	Select Backfill for MSE Walls – Project Special Provision (08/11/16)
69.	02833S	MSE Walls Using Concrete Facing Panels and Metal Reinforcing Elements – Project Special Provision (08/11/16)
70.	02834S	MSE Walls Using Concrete Facing Panels and Geogrid Reinforcing Elements – Project Special Provision (08/11/16)
71.	02839S	Prefabricated Modular Gravity Wall (PMGW) Systems Using Large Modular Block Units – Project Special Provision (08/11/16)
72.	02841M	W-Beam Guardrail – Project Special Provision (08/09/16)
73.	02841M	W-Beam Guardrail – Supplemental Specification (08/29/13)
74.	02842M	Delineators – Project Special Provision (08/09/16)
75.	02843M	Crash Cushions and Barrier End Treatments – Supplemental Specification (06/27/13)
76.	02844M	Concrete Barrier – Project Special Provision (08/09/16)
77.	02844M	Concrete Barrier – Supplemental Specification (10/22/15)
78.	02845M	High Tension Cable Barrier – Supplemental Specification (08/27/15)
79.	02890M	Retroreflective Sheeting – Supplemental Specification (11/06/14)
80.	02891M	Traffic Signs – Supplemental Specification (02/28/13)
81.	02893M	Overhead Sign/VMS Structure – Supplemental Specification (08/30/12)
82.	02913S	Rock Mulch – Project Special Provision (08/09/16)
83.	02924S	Invasive Weed Control – Department Special Provision (02/28/13)
84.	02931M	Pole Plantings/Willow Cuttings – Project Special Provision (09/13/16)
85.	02961M	Rotomilling – Project Special Provision (08/09/16)
86.	03055M	Portland Cement Concrete – Project Special Provision (02/01/16)
87.	03055M	Portland Cement Concrete – Supplemental Specification (10/22/15)
88.	03211M	Reinforcing Steel and Welded Wire – Supplemental Specification (10/25/12)
89.	03310M	Structural Concrete – Supplemental Specification (10/22/15)
90.	03311M	Joint Closure – Supplemental Specification (10/22/15)
91.	03339S	Precast Concrete Deck Panel – Project Special Provision (09/06/16)
92.	03372S	Thin Bonded Polymer Overlay – Project Special Provision (10/24/16)
93.	03373S	Polyester Concrete Overlay – Project Special Provision (09/05/16)
94.	03390	Concrete Curing – Supplemental Specification (10/22/15)
95.	03393M	Concrete Healer/Sealer – Supplemental Specification (08/30/12)
96.	05120M	Structural Steel – Supplemental Specification (08/30/12)
97.	06055M	Timber and Timber Treatment – Supplemental Specification (08/30/12)
98.	13551M	General ATMS Requirements – ATMS Special Provision (06/27/13)

99.	13551M	General ATMS Requirements – Supplemental Specification (04/25/13)
100.	13553M	ATMS Conduit – Project Special Provision (09/14/16)
101.	13553M	ATMS Conduit – Supplemental Specification (10/22/15)
102.	13554M	Polymer Concrete Junction Box – Supplemental Specification (10/22/15)
103.	13555M	ATMS Cabinet – ATMS Special Provision (06/27/13)
104.	13555M	ATMS Cabinet – Supplemental Specification (08/27/15)
105.	13556M	Closed Circuit Television (CCTV) Assembly – Supplemental Specification (08/27/15)
106.	13559M	Non-Intrusive Detector (NID) System – Supplemental Specification (08/27/15)
107.	13561M	ATMS Power Service – ATMS Special Provision (06/27/13)
108.	13594M	Fiber Optic Communication – Supplemental Specification (10/22/15)

I. 2012 Standard Specifications and Standard Drawings

The 2012 State of Utah Standard Specifications for Road and Bridge Construction and Standard Drawings Books apply on this project as static Specification and Drawing Books as well as all other applicable specification and drawing changes.

Refer to Part X for other project specific specifications.

II. List of Supplemental Drawings

This page will be periodically updated to list all approved drawings by date of issue. Include Supplemental Drawings that are applicable to the project at the end of the Plan Set. Update Plan Set Sheet 1A with a listing of the applicable Supplemental Drawings.

Issue Date: September 19, 2012

Revised August 30, 2012

BA 2E	Precast Concrete Half Barrier – 32 Inch New Jersey Shape
BA 3L	Precast Concrete Constant Slope Half Barrier – 42 Inch
BA 4B4	W-Beam Guardrail Median Barrier Transition Hardware and Layout
BA 4D1	W-Beam Guardrail Installations
BA 4E2	W-Beam Guardrail with Curb and Gutter ≥ 5 Inches
BA 4F1	W-Beam Guardrail Buried In Backslope Terminal
BA 4H4	W-Beam Guardrail with Precast Barrier For Span ≥ 25 Ft
CB 11	Precast Concrete Standard Manhole
DD 14B	Typical Rural 2 Lane Road Intersection (Low Speed)
GW 5A	Pedestrian Access
GW 5B	Pedestrian Access
GW 5C	Pedestrian Access
SN 14D	Freeway Sign Frame Fabrication Details
SN 14E	Freeway Sign Bracket Details
TC 1	Traffic Control Drawing Series General Notes
TC 2B	Work Zone Signing
TC 3A	Hazard Mitigation
TC 4A	Standard Work Zone Signing General
TC 4B1	Reduced Speed Work Zone Signing General
TC 4B2	Reduced Speed Shoulder Work Zone Signing General
TC 4C	Traffic Control Project Limit Signing
TC 4D2	Work Zone Specialty Signs
TC 7	Median Crossover and 2-Lane, 2-Way Diversion
TC 18	Blunt End Protection for W-Beam Guardrail and Concrete Barrier
TC 19	Construction Access Points for Speeds of 55 MPH and Greater

Issue Date: November 14, 2012

Revised October 25, 2012

PV 03	Concrete Pavement Details 1 of 2
PV 04	Concrete Pavement Details 2 of 2

Issue Date: March 14, 2013

Revised February 28, 2013

AT 5A	Ramp Meter Detection Layout
AT 5B	Ramp Meter Queue Detection Layout
AT 5C	Ramp Meter Detection Zone Number Assignment
BA 4D3	W-Beam Guardrail Typical Line Post Embedment Special Conditions
CB 11	Precast Concrete Standard Manhole
DD 8	Structural Geometric Design Standards for Clearances
GW 4A	Concrete Driveways and Sidewalks
GW 4B	Concrete Driveways and Sidewalks
GW 5A	Pedestrian Access
GW 5B	Pedestrian Access
GW 5C	Pedestrian Access
GW 11	Sidewalks and Shoulders On Urban Roadways
PV 9	Dowel Bar Retrofit
SL 16	Solar Traffic Counting Station
SN 10A	Slipbase Sign Base (B3) Hardware
SN 10B	Slipbase Sign Base (B3) Installation
TC 3A	Hazard Mitigation

Issue Date: May 9, 2013

Revised April 25, 2013

AT 18	Utility Marker Post Details
GW 12A1	Active Pedestrian Controls for Railroad Crossings Sheet 1 of 2
GW 12A2	Active Pedestrian Controls for Railroad Crossings Sheet 2 of 2
GW 12B1	Passive Pedestrian Controls for Railroad Crossings Sheet 1 of 2
GW 12B2	Passive Pedestrian Controls for Railroad Crossings Sheet 2 of 2
GW 12C1	Pedestrian Controls Semi-Exclusive Railroad Alignments Sheet 1 of 2
GW 12C2	Pedestrian Controls Semi-Exclusive Railroad Alignments Sheet 2 of 2
GW 12D	Pedestrian Controls Street Running Railroad Alignment Signalized Intersections
GW 12E	Pedestrian Controls Street Running Railroad Alignment Unsignalized Intersections

Issue Date: July 17, 2013

Revised June 27, 2013

AT 6	Conduit Details
CC 8A	Grading and Installation Details Crash Cushion Type G
CC 8B	Grading and Installation Details for “3R” Projects End Treatment Type G
DD 18	Utility Location Requirements
ST 9	Location of Bicycle Detector Pavement Markings at Intersection
ST 10	Location of Bicycle Detector Pavement Markings in Bicycle Lane

Issue Date: September 16, 2013

Revised August 29, 2013

BA 4C1	W-Beam Guardrail Anchor Type 1
BA 5B1	Cable Barrier Placement
BA 5J1	Cable Barrier Median Hazard Protection
BA 5J2	Cable Barrier Span Greater Than or Equal 15 Ft to Less Than or Equal 30 Ft
ST 10	Location of Bicycle Detector Pavement Markings in Bicycle Lane

Issue Date: November 21, 2013

Revised October 31, 2013

AT 11A	CCTV Pole Mounting Details
AT 11B	Non-Intrusive Detector Mounting Details
AT 11C	Pole Mounted Cabinet Bracket
AT 15	RWIS Site and Foundation Details
AT 16	RWIS Tower Base and Service Pad Layout
AT 17	RWIS Ground Rod Installation and Tower Grounding
BA 1E	Concrete Barrier Column Protection
BA 4B3	W-Beam Guardrail Transition Curb Sections
BA 4G	W-Beam Guardrail Curve Breakaway Details
BA 5D1	Median Cable Barrier W-Beam Double Sided and Freeway Crossover Anchor System (Type C; C.A.T., Brakemaster)
BA 5D2	Median Cable Barrier W-Beam Double Sided and Freeway Crossover Anchor System (Type C; FLEAT-MT)
GW 1B	Raised Island and Plowable End Section
GW 1D	Median Reflector Details
GW 5C	Pedestrian Access
PV 10	Utility Orientation/Adjustments in PCCP
SL 6	Signal Head Details
SN 2A	School Speed Limit Assembly
SN 3	Overhead School Speed Limit Assembly
SN 6	Speed Reduction Sign Sequence
SN 13A	Tubular Steel Sign Mounting Requirements

TC 4D1	Work Zone Specialty Signs
TC 4D2	Work Zone Specialty Signs
TC 17	Traffic Control Work Zone Guardrail Intermediate End Protection

Issue Date: March 13, 2014

Revised February 27, 2014

BA 1E	Concrete Barrier Column Protection
DG 3	Fill Height for Plastic and Concrete Pipe
DG 4	Pipe Minimum Cover
DG 5	Drainage Pipe Installation
DG 10	Miscellaneous Pipe Details
SN 13C	Mounting Bar Placement for Small Signs

Issue Date: July 14, 2014

Revised June 26, 2014

BA 1A2	Concrete Barrier General Notes and Standard Details 2 of 2
BA 2A	Precast Concrete Barrier – 32 Inch New Jersey Shape
BA 2C	Precast Concrete Barrier – 32 Inch New Jersey Shape, Median Small Sign Section
BA 2D	Cast-In-Place Concrete Barrier – 32 Inch New Jersey Shape, 42 Inch Constant Slope Barrier Transition
BA 2E	Precast Concrete Half Barrier – 32 Inch New Jersey Shape
BA 4G	W-Beam Guardrail Curve Breakaway Details
BA 5B1	Cable Barrier Placement
BA 5B2	Cable Barrier Placement
GW 1C	Raised Island Details
PV 3	Concrete Pavement Details 1 of 2
SL 16	Solar Traffic Counting Station
TC 2C	Work Zone Advanced Warning Arrow Boards

Issue Date: November 20, 2014

Revised November 6, 2014

GW 5A	Pedestrian Access
GW 5B	Pedestrian Access
GW 5C	Pedestrian Access
GW 5D	Pedestrian Access
PV 3	Concrete Pavement Details 1 of 2
SL 1A	Traffic Signal Mast Arm Pole and Luminaire Extension
SL 4	Traffic Signal Mast Arm Pole Foundation
SL 7	Pedestrian Signal Assembly
SN 2A	School Speed Limit Assembly

SN 16A	Multi-Directional Breakaway Base for Steel I-Beam Supports, General Notes
SN 16B	Multi-Directional Breakaway Base for Steel I-Beam Sign Supports, Two Posts
SN 16C	Multi-Directional Breakaway Base for Steel I-Beam Sign Supports, Three Posts
SN 16D	Multi-Directional Breakaway Base for Steel I-Beam Sign Supports, Foundation Details
SN 16E	Multi-Directional Breakaway Base for Sign Post, (B7A)
SN 16F	Multi-Directional Breakaway Base for Sign Post, (B7B)
SN 16G	Multi-Directional Breakaway Base for Sign Post, (B7C)
SN 16H	Multi -Directional Breakaway Base for Round Pipe Single Post, (B7D)
SN 16I	Multi -Directional Breakaway Base for Round Pipe Double Post, (B7D)
ST 9	Location of Bicycle Detector Pavement Markings at Intersection
ST 10	Location of Bicycle Detector Pavement Markings in Bicycle Lane
TC 14A	Traffic Control Flagging Operation
TC 14B	Reduced Speed Signing for Pilot Car Operation (Conventional Roads)

Issue Date: March 12, 2015

Revised February 26, 2015

EN 3	Temporary Erosion Control (Slope Drain and Temporary Berm)
SL 1A	Traffic Signal Mast Arm Pole and Luminaire Extension 30 Ft Through 55 Ft
SL 1B	Traffic Signal Mast Arm Pole and Luminaire Extension 60 Ft Through 75 Ft
SL 2	Traffic Signal Mast Arm Mounting Details
SL 4	Traffic Signal Mast Arm Pole Foundation

Issue Date: May 14, 2015

Revised April 30, 2015

DD 3	Passing and Climbing Lanes
DD 19	Marked Pedestrian Crosswalk Enhancement Flowchart
PV 4	Concrete Pavement Details 2 of 2
PV 6A	Rumble Strips Shoulder Details
PV 6B	Rumble Strips Depth and Location Details
PV 7A	Typical Rumble Strip Shoulder Sequencing and Applications
PV 7B	Typical Rumble Strip Center Line Sequencing and Application
PV 8	Typical Rumble Strip Centerline Application
SL 17A	Pedestrian Signal Crosswalk
SL 17B	Pedestrian Hybrid Beacon Crosswalk
SL 17C	Flashing Beacon at a Crosswalk Intersection

SL 17D	Flashing Beacon at Midblock Crosswalk
SN 19A	Preferential Lane Signing and Pavement Marking Details
SN 19B	Preferential Lane Access Opening Details
SN 19C	Preferential Lane Median Signing Spacing Greater 1 Mile
SN 19D	Preferential Lane Median Signing Spacing Equal to or Less Than 1 Mile
ST 1	Typical Pavement Markings No Pass Zone and Lane Reduction
ST 6A	Passing Lane Details
ST 6B1	Freeway Climbing Lane Inside Widening Detail
ST 6B2	Freeway Climbing Lane Outside Widening Detail

Issue Date: September 21, 2015

Revised August 27, 2015

AT 12	CCTV Foundations for CCTV Pole
BA 4D3	W-Beam Guardrail Typical Line Post Embedment Special Conditions
SL 18	Advance Warning Signal (AWS) System

Issue Date: November 10, 2015

Revised October 22, 2015

AT 01	Legend Sheet
AT 06	Conduit Details
AT 07A	Polymer Concrete Junction Box Details
AT 07B	Precast Concrete Fiber Optic and Utility Vault Details
AT 10E	CCTV DIP Switch Settings
AT 12	CCTV Foundations for CCTV Pole
AT 18	Utility Marker Post Details
AT 19	Utility Marker Post Locations
AT 20	Electronic Toll Lanes Control Systems (ETC)
AT 21	Electronic Toll Lanes Control Systems (ETC Gantry)
AT 22	Attachment Details
AT 23	ETC Equipment Wiring Diagram
BA 05A	Cable Barrier Typical Hardware and Foundation Requirements
SL 06	Signal Head Details

Issue Date: March 10, 2016

Revised October 22, 2015

DG 04	Pipe Minimum Cover and Spacing
SL 12	Highway Luminaire Slip Base Details
SL 14	Highway Luminaire Pole Foundation Extension

State Projects With Full Size Plan Sheets

Issue Date: May 12, 2016

Revised April 28, 2016

SL 1A	Traffic Signal Mast Arm Pole and Luminaire Extension 30 Ft Through 55 Ft
SL 1B	Traffic Signal Mast Arm Pole and Luminaire Extension 60 Ft Through 75 Ft
SL 1C	Traffic Signal Mast Arm Pole and Luminaire Extension 80 Ft Through 85 Ft
SL 1D	Traffic Signal Dual Mast Arm
SL 2A	Traffic Signal Mounting
SL 2B	Traffic Signal Mounting
SL 2C	Mast Arm Sign Mounting
SL 2D	Traffic Signal Head Wiring
SL 6	Traffic Signal Heads
SL 13	Highway Luminaire Arm and Vertical Extension
SL 18	Advance Warning Signal (AWS) System

III. Materials Minimum Sampling and Testing Requirements

Follow the requirements of the Materials Minimum Sampling and Testing Requirements: http://www.udot.utah.gov/go/mstr

IV. Notice to Contractors

NOTICE TO CONTRACTORS

Sealed proposals will be received by the Utah Department of Transportation UDOT/DPS Building (4th Floor), 4501 South 2700 West, Salt Lake City, Utah. 84114-8220, until 2 o'clock p.m. Tuesday, December 06, 2016, and at that time the download process of bids from the Project Delivery System to UDOT will begin, with the public opening of bids scheduled at 2:30 for I-15; Brigham Road to Dixie Drive, Widen Existing Facility of I-15; MP 4.49 - 5.78 in WASHINGTON County, the same being identified as State Project No: S-I15-1(113)5.

Federal Regulations:
Davis-Bacon Wage Rate is Non-Applicable.

Project Location: I-15; MP 4.49 - 5.78

The principal items of work are as follows (for all items of work see attachment):
Prestressed Concrete Member 138 ft- 2 inch Type UBT82
Structural Concrete(Est. Lump Qty: 4387.8 cu yd)
Drilled Shafts, 84 inch

The project is to be completed: to be determined by competitive bid.

Mandatory Pre-bid Conference: November 22, 2016, 09:00 am, UDOT ST GEORGE OFFICE, 5340 W 200 S HURRICANE, UT

Conference attendance is a requirement for bid submission.

Other Requirements:
All project bidding information, including Specifications and Plans, can be viewed, downloaded, and printed from UDOT's Project Development Construction Bid Opening Information website, http://eprpw.dot.utah.gov/bidopeninfo-upper.htm. To bid on UDOT projects, bidders must use UDOT's Electronic Bid System (EBS). The EBS software is also available on this website.

Project information can also be reviewed at the main office in Salt Lake City, its Region offices, and its District offices in Price, Richfield, and Cedar City.

Project Plans cannot be downloaded or printed from the website unless your company is registered with UDOT. Go to UDOT's website to register. Registered companies may also obtain a **CD**, that contains the Specifications and Plans, from the main office, 4501 South 2700 West, Salt Lake City, (801) 965-4346, for a fee of $20.00, plus tax and mail charge, if applicable, none of which will be refunded.

Prequalification of bidders is required. Prior to submitting a bid, the bidder must have on file with the Utah Department of Transportation a completed and approved contractor's application for prequalification. Department processing time is 10 working days from receipt of properly executed documentation. Qualified Health Insurance is required on this project. Insurance must be submitted with executed contracts. See Standard Specification 00515 - 1.11(A).

As required, a contractor's license must be obtained from the Utah Department of Commerce.

Qualified Health Insurance
A prime contractor is subject to qualified health insurance requirements if the prime contract is in the amount of $2,000,000 or greater. A subcontractor is subject to qualified health insurance requirements if the subcontract is in the amount of $1,000,000 or greater.

The Contractor shall demonstrate compliance with qualified health insurance requirements at the time of the execution of each initial prime contract. The Contractor shall demonstrate to the Department that the Contractor has and will maintain an offer of qualified health insurance coverage for the contractor’s employees and the employees’ dependents during the duration of the contract.

If a subcontractor of the Contractor is subject to qualified health insurance requirements, the Contractor shall place a requirement in the subcontract that the subcontractor shall obtain and maintain an offer of qualified health insurance coverage for the subcontractor’s employees and the employees’ dependents during the duration of the subcontract; and certify to the Department that the subcontractor has and will maintain an offer of qualified health insurance coverage for the subcontractor’s employees and the employees’ dependents during the duration of the prime contract.

Bid Bond
Each bidder must submit an electronic bid bond from an approved surety company using UDOT's Electronic Bid System (EBS); or in lieu thereof, cash, certified check, or cashier's check for not less than 5% of the total amount of the bid, made payable to the Utah Department of Transportation, showing evidence of good faith and a guarantee that if awarded the

contract, the bidder will execute the contract and furnish the contract bonds as required.

The right to reject any or all bids is reserved.

If you need an accommodation under the Americans with Disabilities Act, contact the Construction Division at (801) 965-4346. Please allow three working days.

Additional information may be secured at the office of the Utah Department of Transportation, (801) 965-4346.

After the evaluations and final determination of proposals is complete, the State shall award the contract as soon as practicable to the lowest responsive and responsible bidder, subject to Section 63G-6a-709(2).

All bidders should note the State of Utah Procurement Code requires the awarded contractor, for the duration of any contract awarded through this bidding process, to make available company contact information to the Department of Workforce Services in accordance with Utah Code 35A-2-203.

Contractor shall provide information regarding job vacancies to the State of Utah Department of Workforce Services, which may be posted on the Department of Workforce Services website. Posted information shall include the name and contact information for job vacancies. This information shall be provided to the State of Utah Department of Workforce Services for the duration of this Contract. These requirements do not preclude a Contractor from advertising job openings in other forums throughout the State of Utah.

Dated this 12th day of November, 2016.
UTAH DEPARTMENT OF TRANSPORTATION
Carlos M. Braceras, P.E., Director

V. Bidding Schedule

Utah Department of Transportation
Bidder's Schedule

Bid Opening Date: 12/6/2016
Project Number: S-I15-1(113)5
PIN Description: I-15; Brigham Road to Dixie Drive
Concept: Widen Existing Facility
Location: I-15; MP 4.49 - 5.78

Region: REGION 4
County: WASHINGTON

Funding: STATE
Bid Items Version#: 1

10 - ROADWAY

#	Item	Description	Quantity	Unit
1	01285001P	Mobilization	1	lump sum
2	01315001*	Public Information Services	1	lump sum
3	01554001*	Traffic Control	1	lump sum
4	01571002*	Check Dam - 12 Inch Fiber Roll	378	foot
5	01571007*	Drop-Inlet Barrier - 12 Inch Fiber Roll	1	each
6	01571008*	Inlet Barrier	2	each
7	01571009*	Fiber Roll - 12 Inch	5154	foot
8	01571010*	Gutter Inlet Barrier	54	each
9	01571014*	Straw Bale Barrier	1473	foot
10	015710155	Environmental Control Supervisor	1	lump sum
11	017210010	Survey	1	lump sum
12	01727001*	Preconstruction Inspection	1	lump sum
13	01892001P	Reconstruct Catch Basin	1	each
14	01892005P	Reconstruct Manhole	3	each
15	020560015	Granular Borrow (Plan Quantity)	13943	cubic yard
16	02075002*	Geotextiles - Erosion Control (Plan Quantity)	10996	square yard
17	022210025	Remove Manhole	1	each
18	02221003P	Remove Catch Basin	11	each
19	022210050	Remove Tree	8	each
20	022210075	Remove Guardrail	1649	foot
21	022210080	Remove Fence	4629	foot
22	022210095	Remove Pipe Culvert	792	foot
23	022210170	Remove Precast Concrete Barrier	1344	foot
24	022210180	Remove Cast-In-Place Concrete Barrier	484	foot
25	02221020*	Remove Cable Barrier	2593	foot
26	02221030*	Remove Wall	256	foot
27	02221040*	Abandon Storm Drain Pipe	456	foot
28	02316002*	Roadway Excavation (Plan Quantity)	21415	cubic yard
29	02316003*	River Excavation (Plan Quantity)	23900	cubic yard
30	02318001P	Small Ditch Excavation (Plan Quantity)	9942	cubic yard
31	02371000*	Flexible Concrete Block Mat (Plan Quantity)	1661	square yard
32	02373001P	Loose Riprap (Plan Quantity)	10632	cubic yard
33	02373005*	Voidless Riprap (Plan Quantity)	4155	cubic yard
34	02467000*	Jet Grouted Column, 48 Inch	10157	foot
35	02610126P	54 Inch Culvert, Reinforced Concrete, Class C	45	foot
36	026101386	18 Inch Irrigation/Storm Drain, Class C, smooth	2558	foot
37	026101388	24 Inch Irrigation/Storm Drain, Class C, smooth	702	foot
38	02612001*	54 Inch Culvert, Direct Jacking Concrete Pipe, Class C	222	foot
39	026130030	Culvert End Section 18 inch	1	each
40	026130040	Culvert End Section 24 inch	4	each
41	026140040	Salvage and Relay Culvert End Section	1	each

Note: Item numbers ending with "" or "P" identify a change to the Standard Specification, Supplemental Specifications or Measurement and payment. Read all related documents carefully.

Utah Department of Transportation
Bidder's Schedule

Bid Opening Date: 12/6/2016
Project Number: S-I15-1(113)5
PIN Description: I-15; Brigham Road to Dixie Drive
Concept: Widen Existing Facility
Location: I-15; MP 4.49 - 5.78

Region: REGION 4
County: WASHINGTON

Funding: STATE
Bid Items Version#: 1

10 - ROADWAY

#	Item	Description	Quantity	Unit
42	02621000*	Core and Grout Connection	2	each
43	02631000*	Stormwater Treatment Hood	7	each
44	02633003*	5 Foot Standard Manhole - CB 11	5	each
45	02633005*	6 Foot Standard Manhole - CB 11	1	each
46	02633010*	9 Foot Standard Manhole - CB 11	1	each
47	02633012*	Concrete Drainage Structure 3 ft to 5 ft Deep - CB 9	25	each
48	02633013*	Concrete Drainage Structure 5 ft to 7 ft Deep - CB 9	10	each
49	02633014*	Concrete Drainage Structure 7 ft to 9 ft Deep - CB 9	2	each
50	02633015*	Concrete Drainage Structure Greater Than 11 Ft Deep	2	each
51	02633016*	Concrete Drainage Structure, 4 Ft x 6 Ft Combo Box	4	each
52	02633020*	Concrete Drainage Structure Diversion Box - DB 3, W=6 Ft x 6 Ft	2	each
53	027210020	Untreated Base Course (Plan Quantity)	9961	cubic yard
54	02735001*	Micro-Surfacing	107125	square yard
55	02737001*	Asphalt Soft Spot Repair - Contingent Item	100	ton
56	02737002*	Untreated Base Course Soft Spot Repair - Contingent Item	100	cubic yard
57	02737003*	Borrow Soft Spot Repair - Contingent Item	200	cubic yard
58	02741005*	HMA - 1/2 inch	18041	ton
59	02744000*	SMA - 1/2 Inch	3765	ton
60	02761002P	Longitudinal Rumble Strip - Asphalt	8608	foot
61	027610035	Continuous Longitudinal Rumble Strip - Asphalt	11775	foot
62	02776004P	Concrete Flatwork, 6 inch Thick	14252	square foot
63	028210038	6 ft Chain Link Fence, Type IV	3812	foot
64	028220020	Right-of-Way Fence, Type B (Metal Post)	207	foot
65	02842002*	Delineator Type II	4	each
66	02843003P	End Treatment Type G	2	each
67	02844003*	Cast-in-Place Concrete Constant Slope Barrier - 42 Inch	501	foot
68	02844033*	Cast-In-Place Concrete Constant Slope Half Barrier 42 Inch	5016	foot
69	02844037*	Cast-In-Place Concrete Constant Slope Barrier - 54 Inch, Stepped Median Barrier	3594	foot
70	02844038*	Cast-In-Place Concrete Constant Slope Barrier - 54 Inch, Approach End Section	1	each
71	02844046*	Cast-In-Place Concrete Constant Slope Barrier - 54 Inch, Bridge Parapet Transition	3	each
72	02844050*	Cast-In-Place Concrete Constant Slope Barrier - 42 Inch, 32 Inch New Jersery Shape Transition	2	each
73	02844057*	Modified Cast-In-Place Concrete Constant Slope Half Barrier 42 Inch	1042	foot
74	02844058*	Cast-In-Place Concrete Constant Slope Half Barrier - 42 Inch, Bridge Parapet Transition	4	each
75	02844059*	Cast-In-Place Concrete Constant Slope Half Barrier 42 Inch, Transition	2	each
76	02844072*	Cast-In-Place Conc Constant Slope Barrier-54 Inch, Sign Str Foundtn. Transition, Stpd Median Barrier	273	foot
77	02844075*	Double Barrier Transition	1	each
78	02844090*	Move and Reset Precast Concrete Barrier	419	foot
79	02961002*	Rotomilling - 1 1/2 Inch	4271	square yard
80	02963001P	Profile Rotomilling	3903	square yard
81	03575001P	Flowable Fill - Contingent Item	35	cubic yard

Note: Item numbers ending with "" or "P" identify a change to the Standard Specification, Supplemental Specifications or Measurement and payment. Read all related documents carefully.

Utah Department of Transportation
Bidder's Schedule

Bid Opening Date: 12/6/2016
Project Number: S-I15-1(113)5
PIN Description: I-15; Brigham Road to Dixie Drive
Concept: Widen Existing Facility
Location: I-15; MP 4.49 - 5.78

Region: REGION 4
County: WASHINGTON

Funding: STATE
Bid Items Version#: 1

#	Item	Description	Quantity	Unit
20 - STRUCTURES				
	Description: F-806R			
82	03373000*	Place Polyester Concrete Overlay	5640	square foot
83	03373001*	Furnish Polyester Concrete	5640	square foot
84	058320020	Expansion Joint Modification	332	foot
20 - STRUCTURES				
	Description: F-875			
85	020560025	Granular Backfill Borrow (Plan Quantity)	870	cubic yard
86	020560060	Free Draining Granular Backfill (Plan Quantity)	330	cubic yard
87	02221001*	Remove Bridge	2	each
88	02229001*	Temporary Retaining Wall	1	lump sum
89	02455000*	Pile Pre-Drilling	1300	foot
90	024550010	Pile Driving Equipment	1	lump sum
91	02455004D	Driven Piles HP 14 X 117	4108	foot
92	02468000*	Drilled Shafts, 84 inch	880	foot
93	03211001P	Reinforcing Steel - Coated (Plan Quantity)	1034048	pound
94	03310001D	Structural Concrete(Est. Lump Qty: 4387.8 cu yd)	1	lump sum
95	03339001*	Precast Concrete Deck Panel	31200	square foot
96	03372001*	Thin Bonded Polymer Overlay, Type I	70123	square foot
97	033920010	Penetrating Concrete Sealer	26510	square foot
98	03412004D	Prestressed Concrete Member 138 ft- 2 inch Type UBT82	42	each
99	058320010	Expansion Joint	358	foot
100	09981001P	Concrete Coating	1	lump sum
101	165260010	Electrical Work Bridges	1	lump sum
20 - STRUCTURES				
	Description: G-540			
102	028930025	60 Inch Overhead Sign Foundation	2	each
103	02893010P	30 Inch Overhead Double-Mast Span-Type Sign Structure	1	each
20 - STRUCTURES				
	Description: G-541			
104	02221009*	Remove Overhead Sign Structure	1	each
105	028930025	60 Inch Overhead Sign Foundation	2	each
106	02893006P	30 Inch Overhead Cantilever Sign Structure	1	each
107	02893007P	Relocate 30 Inch Overhead Cantilever Sign Structure	1	each

Note: Item numbers ending with "" or "P" identify a change to the Standard Specification, Supplemental Specifications or Measurement and payment. Read all related documents carefully.

Utah Department of Transportation
Bidder's Schedule

Bid Opening Date: 12/6/2016
Project Number: S-I15-1(113)5
PIN Description: I-15; Brigham Road to Dixie Drive
Concept: Widen Existing Facility
Location: I-15; MP 4.49 - 5.78

Region: REGION 4
County: WASHINGTON

Funding: STATE
Bid Items Version#: 1

#	Item	Description	Quantity	Unit
20 - STRUCTURES				
Description: G-542				
108	028930015	42 inch Overhead Sign Foundation	1	each
109	02893007P	18 Inch Overhead Butterfly Sign Structure	1	each
20 - STRUCTURES				
Description: H-2726				
110	03310001P	54 Inch Reinforced Concrete Headwall (Est. Structural Concrete Qty: 8.7 cu yd)	2	each
20 - STRUCTURES				
Description: R-800				
111	02831001*	MSE Retaining Wall R-800(Est. Lump Qty: 9205 sq ft)	1	lump sum
20 - STRUCTURES				
Description: R-801				
112	02839001*	Prefabricated Modular Gravity Wall R-801(Est. Lump Qty: 3558 sq ft)	1	lump sum
30 - LANDSCAPING				
113	023760020	Flexible Channel Liner	2470	square yard
114	02912005P	Strip, Stockpile, and Spread Topsoil	97	1000 square fee
115	02913000*	Rock Mulch	56	1000 square fee
116	02922003P	Broadcast Seed (Floodplain Mix)	94	1000 square fee
117	02922004P	Broadcast Seed	199	1000 square fee
118	02931001*	Cottonwood Pole Planting	39	each
119	02931002*	Willow Cutting	221	each
40 - SIGNING				
120	027650040	Remove Pavement Message	22	each
121	027650050	Pavement Marking Paint	520	gallon
122	027680105	Pavement Message (Preformed Thermoplastic)	60	each
123	028910070	Sign Type A-1, 48 inch X 48 inch	3	each
124	028910075	Sign Type A-2	2142	square foot
125	02891020P	Sign Type A-2, 12 Inch x 24 Inch	2	each
126	028910270	Remove Sign Less Than 20 Square Feet	7	each
127	028910275	Remove Sign Greater Than or Equal to 20 Square Feet	9	each
128	028910285	Relocate Sign Less Than 20 Square Feet	1	each

Note: Item numbers ending with "" or "P" identify a change to the Standard Specification, Supplemental Specifications or Measurement and payment. Read all related documents carefully.

Utah Department of Transportation
Bidder's Schedule

Bid Opening Date: 12/6/2016
Project Number: S-I15-1(113)5
PIN Description: I-15; Brigham Road to Dixie Drive
Concept: Widen Existing Facility
Location: I-15; MP 4.49 - 5.78

Region: REGION 4
County: WASHINGTON

Funding: STATE
Bid Items Version#: 1

#	Item	Description		Quantity	Unit
40 - SIGNING					
129	028910290	Relocate Sign Greater Than or Equal to 20 Square Feet		5	each
130	02891030P	Small Sign Tubular Steel Post Base (B2A) (Triangular Steel Anchor System)		2	each
131	028910345	Sign Post Base (B6A) for Standard Pipe Posts		5	each
132	028910350	Sign Post Base (B6B) For S Section Steel Posts		2	each
133	028910360	Sign Post P2		2	each
134	028910420	Post S8 X 18.4		2	each
135	028910450	Post 4 Inch Standard Pipe		3	each
136	028910455	Post 5 Inch Standard Pipe		2	each
137	02891050P	Relocate Sign Panel		1	each
70 - ATMS					
138	13551020P	Relocate Existing Power Conductors		1	lump sum
139	135530015	One 2-Inch Conduit		1499	foot
140	135530025	One 3-Inch Conduit		20	foot
141	135530040	2D Conduit		683	foot
142	13553005P	2D Conduit (2-Inch)		2493	foot
143	135540020	Polymer Concrete Junction Box, Tier 22, Type I		3	each
144	135540030	Polymer Concrete Junction Box, Tier 22, Type II		1	each
145	135540040	Polymer Concrete Junction Box, Tier 22, Type III		6	each
146	13556020P	Relocate Existing CCTV / NID Site		1	lump sum
147	135940070	24 Strand SMFO Cable		984	foot
148	13594010P	Relocate Existing 72 Strand SMFO Cable		1	lump sum
149	135940130	Fusion Splice		124	each
150	135940150	Type B Splice Enclosure		1	each
151	13594020P	6 Strand Pre-Terminated Drop Cable Unit		145	foot
180 - TIME AND/OR LANE RENTAL					
152	00221000*	Contract Time	Date Range: 250 - 340	0	day
153	00222000*	Lane Rental		1	lump sum

Note: Item numbers ending with "" or "P" identify a change to the Standard Specification, Supplemental Specifications or Measurement and payment. Read all related documents carefully.

VI. Measurement and Payment

Measurement and Payment

Project # S-I15-1(113)5

Item #	Bid Item Number	Bid Item Name	UOM
1	01285001P	Mobilization	lump sum

Amount Paid	When Paid
The lesser of 25% of Mobilization or 2.5% of contract	With first estimate
The lesser of 50% of Mobilization or 5% of contract	With estimate following completion of 5% of contract
The lessor of 75% of Mobilization or 7.5% of contract	With estimate following completion of 10% of contract
The lessor of 100% of Mobilization or 10% of contract	Wtih estimate following completion of 20% of contract
Amount bid in excess of 10% of contract	Project Acceptance-Final

Includes all costs associated with Railroad Flagging, inspection, and cleanup crew according to Section 00725.

Includes all costs associated with maintaining the existing drip irrigation system along Pioneer Road as per Section 00555M.
Includes all costs associated with environmental mitigation measures as per Section 00555M

2	01315001*	Public Information Services	lump sum

25% of bid item amount paid with first estimate.
Remaining portion of bid item paid as a percentage of the contract completed with each subsequent estimate.

3	01554001*	Traffic Control	lump sum

Amount Paid
25% of the bid item amount with first estimate
Remaining portion of bid item paid as a percentage of the contract completed with each subsequent estimate.

Includes the cost to provide, install, and maintain variable message boards (VMS). Includes furnishing, placing, maintaining and removing fixed signs.
Includes temporary barrier.
Includes temporary asphalt pavement as needed.
Includes all costs associated with Utah Highway Patrol as per Section 01554M.

4	01571002*	Check Dam - 12 Inch Fiber Roll	foot

Measured along centerline of fiber roll

Includes installing, moving, or relocating fiber roll as needed for construction activities or as directed by Engineer to maintain a properly protected site throughout the duration of project.

5	01571007*	Drop-Inlet Barrier - 12 Inch Fiber Roll	each

Includes installing, moving, or relocating fiber roll as needed for construction activities or as directed by Engineer to maintain a properly protected site throughout the duration of project.

6	01571008*	Inlet Barrier	each

Includes installing, moving, or relocating inlet barrier as needed for construction activities or as directed by Engineer to maintain a properly protected site throughout the duration of project.

7	01571009*	Fiber Roll - 12 Inch	foot

Measured along centerline of fiber roll.

Includes installing, moving, or relocating fiber roll as needed for construction activities or as directed by Engineer to maintain a properly protected site throughout the duration of project.

8	01571010*	Gutter Inlet Barrier	each

IncludIncludes installing, moving, or relocating gutter inlet barrier as needed for construction activities or as directed by Engineer to maintain a properly protected site throughout the duration of project.

9	01571014*	Straw Bale Barrier	foot

Straw bale barrier deemed unusable by Engineer when it is being moved or relocated from one site to another will be replaced with new straw bale barrier. Straw bales damaged by Contractor are replaced at no cost to the Department.
Measured along centerline of bales

Includes installing, moving, and/or relocating straw bale barrier as needed or directed by Engineer, based on the phasing and sequencing of construction activities. Moving and relocating the same straw bales on the same side of the active or relocated river channel is incidental to the payment of the original straw bale barrier. Straw bale barrier placed on the opposite side of the active or relocated river channel will be paid for as new straw bale barrier.

10	015710155	Environmental Control Supervisor	lump sum

Amount Paid	When Paid
25% of the bid item amount	With first estimate
Remaining portion of bid item paid as a percentage of the contract completed	With each subsequent estimate

11	017210010	Survey	lump sum

25% of the bid item amount	When the project is 5% complete
A total of 40% of bid item amount	When the project is 10% complete
A total of 75% of bid item amount	When the project is 50% complete

Item #	Bid Item Number	Bid Item Name	UOM
		A total or 90% of bid item amount When the project is 75% complete The Department retains the remaining 10 percent of bid item amount until the project is completed and the red-lined hard copy plan set showing as-constructed features denoting changes from the original design is provided to the Engineer and verified complete.	
12	01727001*	Preconstruction Inspection	lump sum
		Includes all materials, labor, and equipment necessary to complete the preconstruction inspection as per Section 01727S.	
13	01892001P	Reconstruct Catch Basin	each
		Includes new grate and frame (per UDOT Std Dwgs), and all other materials and labor needed to raise catch basin grate and frame to grade.	
14	01892005P	Reconstruct Manhole	each
		Includes new cover and frame (use bolt down cover where called out in plans), concrete collar in paved areas, and all other materials and labor needed to raise manhole frame and cover to grade.	
15	020560015	Granular Borrow (Plan Quantity)	cubic yard
		In final position	
16	02075002*	Geotextiles - Erosion Control (Plan Quantity)	square yard
		Measurement does not include overlaps Plan quantity includes geotextile edges folded up along edges of riprap, as shown in plans.	
17	022210025	Remove Manhole	each
18	02221003P	Remove Catch Basin	each
		For median drop inlets: Includes removal of pipe riser.	
19	022210050	Remove Tree	each
20	022210075	Remove Guardrail	foot
		Includes posts, end treatments, transition elements, and anchorages	
21	022210080	Remove Fence	foot
		Includes all line posts, brace posts, and foundations	
22	022210095	Remove Pipe Culvert	foot
23	022210170	Remove Precast Concrete Barrier	foot
24	022210180	Remove Cast-In-Place Concrete Barrier	foot
		Includes removal of Portland Cement Concrete Pavement (PCCP) under cast-in-place barrier.	
25	02221020*	Remove Cable Barrier	foot
		Includes cable, posts, anchorages, and all other elements and appurtenances. Includes maintaining stability of remaining cable barrier system outside limits of removal, Includes salvaging cable barrier posts and hardware to UDOT Maintenance Station.	
26	02221030*	Remove Wall	foot
		Includes wall, foundation, appurtenances, and backfill.	
27	02221040*	Abandon Storm Drain Pipe	foot
		Includes flowable fill, end caps/plugs, and removal of ends of pipe as needed.	
28	02316002*	Roadway Excavation (Plan Quantity)	cubic yard
		Includes removal of existing delineators within the roadway excavation limits. Includes salvaging Shur-Tite delineators to UDOT. Includes excavation, hauling, grading, placement, erosion protection, and seeding for any excess material wasted on the roadway side slopes (see Section 00555M for additional information). Includes removal and clearing of vegetation within excavation limits.	

Item #	Bid Item Number	Bid Item Name	UOM
29	02316003*	River Excavation (Plan Quantity)	cubic yard
		Plan quantity was calculated assuming a 1:1 temporary excavation slope for buried riprap. Additional excavation needed for de-watering or temporary channel relocation is incidental to River Excavation (Plan Quantity), but is not included in the calculated plan quantity. Includes all excavation (including temporary) needed for riprap placement, compacted backfill and final grading in Virgin River area, as detailed in the plans. Includes temporary stockpiling or wasting of excess material offsite. Includes temporary channel relocation, coffer dams, and de-watering needed for riprap placement.	
30	02318001P	Small Ditch Excavation (Plan Quantity)	cubic yard
		Includes excavation needed for riprap placement below finished surface of riprap. Includes excavation for ditches as shown in plans.	
31	02371000*	Flexible Concrete Block Mat (Plan Quantity)	square yard
		Measurement does not include overlaps. Plan quantity includes a 2 foot key-in along outside edges, as shown in plans. Includes all geotextile fabrics, erosion control blankets, granular bedding, anchoring devices, key-ins, excavation needed for key-ins, and all other materials and labor needed to install Flexible Concrete Block Mat per manufacturer's recommendations and as detailed in the plans.	
32	02373001P	Loose Riprap (Plan Quantity)	cubic yard
		Calculated using the in-place surface area and specified thickness.	
33	02373005*	Voidless Riprap (Plan Quantity)	cubic yard
		Calculated using the in-place surface area, specified thickness, and sections included in the plans. Includes riprap placement and jetting material into voids of riprap to produce voidless riprap. Includes all other labor, equipment and materials needed to place and produce voidless riprap.	
34	02467000*	Jet Grouted Column, 48 Inch	foot
		All labor, equipment, and materials required to install the jet grouted columns. Replacement of existing riprap, if disturbed, is incidental to this item.	
35	02610126P	54 Inch Culvert, Reinforced Concrete, Class C	foot
		A. Measured along centerline of pipe B. Trench excavation, pipe bedding and backfill as shown in the Standard Drawings are incidental to construction and no separate payment will be made. C. Connections to drainage structures or featuers are incidental to construction and no separate payment will be made. D. No separate payment will be made for required inspection and testing.	
36	026101386	18 Inch Irrigation/Storm Drain, Class C, smooth	foot
		A. Measured along centerline of pipe B. Trench excavation, pipe bedding and backfill as shown in the Standard Drawings are incidental to construction and no separate payment will be made. C. Connections to drainage structures or featuers are incidental to construction and no separate payment will be made. D. No separate payment will be made for required inspection and testing.	
37	026101388	24 Inch Irrigation/Storm Drain, Class C, smooth	foot
		A. Measured along centerline of pipe B. Trench excavation, pipe bedding and backfill as shown in the Standard Drawings are incidental to construction and no separate payment will be made. C. Connections to drainage structures or featuers are incidental to construction and no separate payment will be made. D. No separate payment will be made for required inspection and testing.	
38	02612001*	54 Inch Culvert, Direct Jacking Concrete Pipe, Class C	foot
		A. Measured along centerline of pipe B. Includes all equipment, materials, and labor for trenchless pipe installation, including but not limited to: geotechnical investigation, bore pits, shoring, pipe materials, etc. C. Outside of trenchless installation, trench excavation, pipe bedding and backfill as shown in the Standard Drawings are incidental to construction and no separate payment will be made. D. Connections to drainage structures or featuers are incidental to construction and no separate payment will be made. E. No separate payment will be made for required inspection and testing.	
39	026130030	Culvert End Section 18 inch	each
40	026130040	Culvert End Section 24 inch	each
41	026140040	Salvage and Relay Culvert End Section	each
42	02621000*	Core and Grout Connection	each
		Includes all labor, equipment, and materials necessary to core and grout new pipes to existing drainage structures as per Section 02621S.	
43	02631000*	Stormwater Treatment Hood	each

Item #	Bid Item Number	Bid Item Name	UOM
		Includes fasteners, anchors, siphon prevention vent, and any other materials and labor required to install a complete Stormwater Treatment Hood.	
44	02633003*	5 Foot Standard Manhole - CB 11	each
		A. Consists of all necessary materials required to make a complete drainage structure including but not limited to the following: Concrete, reinforcing steel, grate and frame, manhole steps, and any other items required in standard drawings. B. The connection to any pipe culvert or other drainage feature will be incidental to construction and no separate payment will be made for this work. C. The Department will pay a percentage of the unit bid price in addition to the price for each structure, proportional to volume changes (example: a 4 ft deep box increased by 1.5 ft, the percentage of increase in payment is 1.5 ÷ 4 x 100) for any required field changes larger than 1 foot of specified plan dimensions. D. The Department will make no separate payment for testing upon failure of visual inspection.	
45	02633005*	6 Foot Standard Manhole - CB 11	each
		A. Consists of all necessary materials required to make a complete drainage structure including but not limited to the following: Concrete, reinforcing steel, cover and frame, manhole steps, and any other items required in standard drawings. B. Includes locating existing buried manhole/junction box, removing and replacing portions of existing pipes as needed for connections to existing system, and all other labor, equipment, and materials needed to perform work, as noted/called out on DR-04. C. The connection to any pipe culvert or other drainage feature will be incidental to construction and no separate payment will be made for this work. D. The Department will pay a percentage of the unit bid price in addition to the price for each structure, proportional to volume changes (example: a 4 ft deep box increased by 1.5 ft, the percentage of increase in payment is 1.5 ÷ 4 x 100) for any required field changes larger than 1 foot of specified plan dimensions. E. The Department will make no separate payment for testing upon failure of visual inspection.	
46	02633010*	9 Foot Standard Manhole - CB 11	each
		A. Consists of all necessary materials required to make a complete drainage structure including but not limited to the following: Concrete, reinforcing steel, grate and frame, manhole steps, and any other items required in standard drawings. B. The connection to any pipe culvert or other drainage feature will be incidental to construction and no separate payment will be made for this work. C. The Department will pay a percentage of the unit bid price in addition to the price for each structure, proportional to volume changes (example: a 4 ft deep box increased by 1.5 ft, the percentage of increase in payment is 1.5 ÷ 4 x 100) for any required field changes larger than 1 foot of specified plan dimensions. D. The Department will make no separate payment for testing upon failure of visual inspection.	
47	02633012*	Concrete Drainage Structure 3 ft to 5 ft Deep - CB 9	each
		A. Consists of all necessary materials required to make a complete drainage structure including but not limited to the following: Concrete, reinforcing steel, grate and frame, manhole steps, and any other items required in standard drawings. B. The connection to any pipe culvert or other drainage feature will be incidental to construction and no separate payment will be made for this work. C. The Department will pay a percentage of the unit bid price in addition to the price for each structure, proportional to volume changes (example: a 4 ft deep box increased by 1.5 ft, the percentage of increase in payment is 1.5 ÷ 4 x 100) for any required field changes larger than 1 foot of specified plan dimensions. D. The Department will make no separate payment for testing upon failure of visual inspection.	
48	02633013*	Concrete Drainage Structure 5 ft to 7 ft Deep - CB 9	each
		A. Consists of all necessary materials required to make a complete drainage structure including but not limited to the following: Concrete, reinforcing steel, grate and frame, manhole steps, and any other items required in standard drawings. B. The connection to any pipe culvert or other drainage feature will be incidental to construction and no separate payment will be made for this work. C. The Department will pay a percentage of the unit bid price in addition to the price for each structure, proportional to volume changes (example: a 4 ft deep box increased by 1.5 ft, the percentage of increase in payment is 1.5 ÷ 4 x 100) for any required field changes larger than 1 foot of specified plan dimensions. D. The Department will make no separate payment for testing upon failure of visual inspection.	
49	02633014*	Concrete Drainage Structure 7 ft to 9 ft Deep - CB 9	each
		A. Consists of all necessary materials required to make a complete drainage structure including but not limited to the following: Concrete, reinforcing steel, grate and frame, manhole steps, and any other items required in standard drawings. B. The connection to any pipe culvert or other drainage feature will be incidental to construction and no separate payment will be made for this work. C. The Department will pay a percentage of the unit bid price in addition to the price for each structure, proportional to volume changes (example: a 4 ft deep box increased by 1.5 ft, the percentage of increase in payment is 1.5 ÷ 4 x 100) for any required field changes larger than 1 foot of specified plan dimensions. D. The Department will make no separate payment for testing upon failure of visual inspection.	
50	02633015*	Concrete Drainage Structure Greater Than 11 Ft Deep	each
		A. Consists of all necessary materials required to make a complete drainage structure including but not limited to the following: Concrete, reinforcing steel, grate and frame, manhole steps, and any other items required in standard drawings. B. The connection to any pipe culvert or other drainage feature will be incidental to construction and no separate payment will be made for this work. C. The Department will pay a percentage of the unit bid price in addition to the price for each structure, proportional to volume changes	

Item #	Bid Item Number	Bid Item Name	UOM
		(example: a 4 ft deep box increased by 1.5 ft, the percentage of increase in payment is 1.5 ÷ 4 x 100) for any required field changes larger than 1 foot of specified plan dimensions. D. The Department will make no separate payment for testing upon failure of visual inspection.	
51	02633016*	Concrete Drainage Structure, 4 Ft x 6 Ft Combo Box	each
		A. Consists of all necessary materials required to make a complete drainage structure including but not limited to the following: Concrete, reinforcing steel, grate, manhole cover and frames (use bolt down cover), manhole steps, collars, and any other items required in approved drawings. B. Includes submittal of stamped working drawings and incidental engineering work by a registered Utah P.E., per note 6 on DR-01. C. The connection to any pipe culvert or other drainage feature will be incidental to construction and no separate payment will be made for this work. D. The Department will pay a percentage of the unit bid price in addition to the price for each structure, proportional to volume changes (example: a 4 ft deep box increased by 1.5 ft, the percentage of increase in payment is 1.5 ÷ 4 x 100) for any required field changes larger than 1 foot of specified plan dimensions. E. The Department will make no separate payment for testing upon failure of visual inspection.	
52	02633020*	Concrete Drainage Structure Diversion Box - DB 3, W=6 Ft x 6 Ft	each
		A. Consists of all necessary materials required to make a complete drainage structure including but not limited to the following: Concrete, reinforcing steel, cover and frame (use bolt down cover where called out in plans), manhole steps, and any other items required in standard drawings. Includes replacing portions of existing pipes as needed for connections to existing system, and all other labor, equipment, and materials needed to perform work. B. The connection to any pipe culvert or other drainage feature will be incidental to construction and no separate payment will be made for this work. C. The Department will pay a percentage of the unit bid price in addition to the price for each structure, proportional to volume changes (example: a 4 ft deep box increased by 1.5 ft, the percentage of increase in payment is 1.5 ÷ 4 x 100) for any required field changes larger than 1 foot of specified plan dimensions. D. The Department will make no separate payment for testing upon failure of visual inspection.	
53	027210020	Untreated Base Course (Plan Quantity)	cubic yard
54	02735001*	Micro-Surfacing	square yard
		Includes all labor, equipment, and material necessary to install micro-surfacing as per plans and specifications. Overlapping micro-surfacing on rumble strips for double coverage up to 2' maximum width is measured and paid separately. Measure top width of rumble strip plus 4' x length for area.	
55	02737001*	Asphalt Soft Spot Repair - Contingent Item	ton
		Includes all labor, materials and equipment incidental to the Soft Spot Repair. Including traffic control, asphalt removal, hauling, disposal of excavated material, placement, compaction, and HMA. Estimated quantities are based on preliminary field review for bidding purposes only. Actual quantities needed for repair will be determined by the Engineer. Asphalt Soft Spot Repair may be reduced, deleted, or increased beyond the bid quantities listed in the contract. Actual quantities placed will be paid at the contract unit price.	
56	02737002*	Untreated Base Course Soft Spot Repair - Contingent Item	cubic yard
		Includes all labor, materials and equipment incidental to the Soft Spot Repair. Including traffic control, roadway excavation, hauling, disposal of excavated material, placement, compaction, and untreated base course. Estimated quantities are based on preliminary field review for bidding purposes only. Actual quantities needed for repair will be determined by the Engineer. Untreated Base Course Soft Spot Repair may be reduced, deleted, or increased beyond the bid quantities listed in the contract. Actual quantities placed will be paid at the contract unit price.	
57	02737003*	Borrow Soft Spot Repair - Contingent Item	cubic yard
		Includes all labor, materials and equipment incidental to the Soft Spot Repair. Including traffic control, roadway excavation, disposal of excavated material, hauling, placement, compaction, and borrow or other materials as approved by the Engineer. Includes the cost of Geogrid, Type 2 and all materials and equipment necessary to install. Includes Dust Control and Watering as per Section 01572. Estimated quantities are based on preliminary field review for bidding purposes only. Actual quantities needed for repair will be determined by the Engineer. Borrow Soft Spot Repair may be reduced, deleted, or increased beyond the bid quantities listed in the contract. Actual quantities placed will be paid at the contract unit price.	
58	02741005*	HMA - 1/2 inch	ton
		Includes aggregates, asphalt binder, hydrated lime, tack coat, and other additives, etc.	
59	02744000*	SMA - 1/2 Inch	ton
		Includes aggregates, asphalt binder, hydrated lime, tack coat, mineral cellulose fiber, mineral filler and other additives, etc.	
60	02761002P	Longitudinal Rumble Strip - Asphalt	foot
		Includes CSS-1h for flush coat. Measured length includes grind areas and gaps between grind sequences.	
61	027610035	Continuous Longitudinal Rumble Strip - Asphalt	foot
		Includes CSS-1h for flush coat.	

Item #	Bid Item Number	Bid Item Name	UOM
62	02776004P	Concrete Flatwork, 6 inch Thick	square foot
		Includes excavation and untreated base course. Includes reinforcing steel and cutoff walls as detailed in the plans. See sheet DT-10.	
63	028210038	6 ft Chain Link Fence, Type IV	foot
		Measured parallel to the ground along the fence. Includes line posts, less openings.	
64	028220020	Right-of-Way Fence, Type B (Metal Post)	foot
		Measured parallel to the ground along the fence including line posts, less openings.	
65	02842002*	Delineator Type II	each
		Includes removal and disposal of existing delineators. Includes maintenance markers.	
66	02843003P	End Treatment Type G	each
		Includes all crash cushion markings, marker posts and plates, object markers, mounting hardware, untreated base course and pad. Includes all labor, materials, and equipment to grade, roll, and compact the median for the transition to the crash cushion and barrier, as per sheet GR-01	
67	02844003*	Cast-in-Place Concrete Constant Slope Barrier - 42 Inch	foot
		Includes barrier reflectors. See BA Series, Standard Drawing BA 3A1.	
68	02844033*	Cast-In-Place Concrete Constant Slope Half Barrier 42 Inch	foot
		Includes barrier reflectors. See BA Series Standard Drawings.	
69	02844037*	Cast-In-Place Concrete Constant Slope Barrier - 54 Inch, Stepped Median Barrier	foot
		Includes barrier reflectors. See sheet DT-02 and BA Series Standard Drawings.	
70	02844038*	Cast-In-Place Concrete Constant Slope Barrier - 54 Inch, Approach End Section	each
		Includes barrier reflectors. See BA Series Standard Drawings.	
71	02844046*	Cast-In-Place Concrete Constant Slope Barrier - 54 Inch, Bridge Parapet Transition	each
		Includes barrier reflectors and rigid plastic foam. See BA Series Standard Drawings.	
72	02844050*	Cast-In-Place Concrete Constant Slope Barrier - 42 Inch, 32 Inch New Jersery Shape Transition	each
		Includes barrier reflectors. See sheet DT-07.	
73	02844057*	Modified Cast-In-Place Concrete Constant Slope Half Barrier 42 Inch	foot
		Includes barrier reflectors. See sheet DT-04.	
74	02844058*	Cast-In-Place Concrete Constant Slope Half Barrier - 42 Inch, Bridge Parapet Transition	each
		Includes barrier reflectors. See sheet DT-03.	
75	02844059*	Cast-In-Place Concrete Constant Slope Half Barrier 42 Inch, Transition	each
		Includes barrier reflectors. See Sheet DT-06.	
76	02844072*	Cast-In-Place Conc Constant Slope Barrier-54 Inch, Sign Str Foundtn. Transition, Stpd Median Barrier	foot
		Includes barrier reflectors and closure slab. Does not include sign structure or high mast lighting foundation. See sheets DT-08 and DT-09.	
77	02844075*	Double Barrier Transition	each
		Includes barrier reflectors. See sheet DT-05.	
78	02844090*	Move and Reset Precast Concrete Barrier	foot
		Includes removing and resetting precast concrete barrier as per BA Series Standard Drawings. Includes barrier reflectors, as directed by Engineer.	
79	02961002*	Rotomilling - 1 1/2 Inch	square yard

Item #	Bid Item Number	Bid Item Name	UOM
		Calculated from length multiplied by the average finished width of rotomilled surface	
80	02963001P	Profile Rotomilling	square yard
		Calculated from length multiplied by the average finished width of rotomilled surface. Includes all materials, labor, and equipment to complete profile rotomilling. Includes string line or survey needed to correct the profile deficiencies and tie into the existing pavement or structure, as per plan sheets DT-11, GR-04, and GR-05.	
81	03575001P	Flowable Fill - Contingent Item	cubic yard
		Includes all labor, materials, and equipment required to place the flowable fill, as directed by the Engineer. Estimated quantity is for bidding purposes only. Actual quantity needed will be determined by the Engineer. Flowable fill may be reduced, deleted, or increased beyond the bid quantity listed in the contract. Actual quantity placed will be paid at the contract unit price.	
82	03373000*	Place Polyester Concrete Overlay	square foot
		Includes cost for all materials, equipment, labor, manufacturer's representative, and all incidental items necessary to install the polyester concrete overlay and High Molecular Weight Methacrylate (HMWM) resin primer. Includes surface preparation, including removal of existing thin bonded polymer overlay, and grinding of the existing receiving surface necessary to place the polyester concrete overlay to the finished grades and the minimum thickness shown in the plans. Includes as incidental items: (1) All environmental controls used to prevent concrete grinding slurry from entering drainage and storm systems, (2) all costs associated with constructing and disposing of trial overlays and base, (3) replacement of overlay areas not in compliance with the contract, (4) hot poured elastomeric joint seal material, and (5) polymer overlay repair, if required. Includes cost for surveying used to establish variable depth overlay finished grade elevations.	
83	03373001*	Furnish Polyester Concrete	square foot
		Includes all materials, equipment, labor, and incidentals for furnishing polyester concrete. Includes high molecular weight methacrylate (HMWM) resin primer and materials for trial overlays.	
84	058320020	Expansion Joint Modification	foot
		A. Includes all labor, equipment, and materials required to modify existing expansion joint. B. Measured from out-to-out of deck along the skew of the individual joints. C. The Department will make no seperate payment for required inspection and testing.	
85	020560025	Granular Backfill Borrow (Plan Quantity)	cubic yard
		In final position	
86	020560060	Free Draining Granular Backfill (Plan Quantity)	cubic yard
87	02221001*	Remove Bridge	each
		Includes removal of bridge substructure to the limits shown on the plans and in Special Provision 02221M.	
88	02229001*	Temporary Retaining Wall	lump sum
		Includes design calculation, shop drawings and all materials, equipment, and labor necessary to complete and remove (to 4' below finished grade) the required temporary retaining walls during construction.	
89	02455000*	Pile Pre-Drilling	foot
		Includes all materials, equipment, labor, and all incidental items necessary to pre-drill or pre-auger for H-piles.	
90	024550010	Pile Driving Equipment	lump sum
		A. Payment made in two increments. 1. Sixty percent paid at the time the pile driving equipment is moved into location. 2. Forty percent paid after all piles have been driven and the pile driving equipment is removed from project location. B. Include all fixed costs related to Driven Piles in this item.	
91	02455004D	Driven Piles HP 14 X 117	foot
		A. The price will be full compensation for all work and materials, including pile-driving tips. B. A maximum of one additional splice per pile will be measured and paid as additional length of pile only when the required length of pile driven exceeds the estimated length shown on the drawings by at least six feet. Additional splices determined as such will be paid as an additional equivalent length of pile of three feet each. C. Department will not pay separately for down time for dynamic testing equipment installation.	
92	02468000*	Drilled Shafts, 84 inch	foot
		Includes all labor, equipment, materials, placing concrete underwater, testing, casings, reinforcing steel, concrete, forms, rebar couplers, slurry, and rebar shop drawings.	
93	03211001P	Reinforcing Steel - Coated (Plan Quantity)	pound
		A. Do not include the mass of the coating or the specified test bars as computed weight.	

Item #	Bid Item Number	Bid Item Name	UOM
		B. Department will not make allowances for extra reinforcing steel required to provide lap splices that are requested by the Contractor. C. Department will not make allowances for clips, chairs, wire, or other materials used for fastening reinforcement in place. D. Includes mechanical couplers.	
94	03310001D	Structural Concrete (Est. Lump Qty: 4387.8 cu yd)	lump sum
		A. Do not use contract lump sum bid amounts as exact quantities. The plans show estimated quantities only. B. Measure quantities by the dimensions shown when the contract provides measurement per cubic yard. C. Use the prismoidal formula when the method of average end areas is not sufficiently accurate. D. Do not measure concrete required to fill over breakage of excavation for footings, walls, or slabs. E. Department will not deduct for volume occupied by pipes (other than culverts), reinforcing steel, piles, metal grillage, anchors, conduits, or weep holes. F. Department will pay for reinforcing steel for structures separately, unless otherwise noted. G. Department will pay separately for concrete placed in individual structures containing less than eight cubic yards at the bid price per cubic yard for Concrete, Small Structure. H. Department will make no separate payment for excavation for structures. I. Department will adjust prices as follows when the Contract provides for concrete structures as a lump sum: 1. If the Engineer increases or decreases the quantity of concrete: a. Unit price will be determined by dividing the contract lump sum price of that item by the estimated quantity of concrete shown on the plans. b. The contract lump sum price will be adjusted by an amount equal to the product of the change in quantity and computed unit price. 2. If the estimated quantity of concrete as shown is in error by more than 10 percent: a. The contract lump sum price will be increased or decreased by an amount equal to the product of the unit price determined in accordance with number 1 above. J. Includes approach slab drain grates, and frames. K. Includes butyl rubber sheets, rigid plastic foam, and joint filler.	
95	03339001*	Precast Concrete Deck Panel	square foot
		A. Includes all items required to complete this item according to the contract, including labor, materials, and equipment. Includes manufacturing, furnishing, and placement of all precast concrete deck panels. B. Includes repair for defects and breakage of precast elements.	
96	03372001*	Thin Bonded Polymer Overlay, Type I	square foot
		Includes the cost of the two part polymer resin, aggregate, labor, and incidental items required to install the Thin Bonded Polymer Overlay. This also includes the cost for any repairs that are needed in compliance with the warranty letter.	
97	033920010	Penetrating Concrete Sealer	square foot
		Of surface covered	
98	03412004D	Prestressed Concrete Member 138 ft- 2 inch Type UBT82	each
		Includes all materials, equipment, and labor necessary for fabrication, delivery, and erection of prestressed concrete members. Includes all materials, equipment, and labor necessary for fabrication and installation of bearings, bearing plates, graffiti covers, and intermediate diaphragms. Average length for all girders provided.	
99	058320010	Expansion Joint	foot
		A. Includes all labor, equipment, and materials required to install new expansion joint. B. Measured from out-to-out of deck along the skew of the individual joints. C. The Department will make no seperate payment for required inspection and testing.	
100	09981001P	Concrete Coating	lump sum
		Includes all labor, equipment, and materials necessary to apply color as shown in the plans. Estimated Concrete Coating Qty: 27,010 sq ft	
101	165260010	Electrical Work Bridges	lump sum
102	028930025	60 Inch Overhead Sign Foundation	each
		Includes all materials, equipment, labor, and incidental items necessary to provide overhead sign foundations. Includes conduit, steel reinforcement, anchor bolt templates, and grounding materials associated with the overhead sign foundation.	
103	02893010P	30 Inch Overhead Double-Mast Span-Type Sign Structure	each

Item #	Bid Item Number	Bid Item Name	UOM
		Includes sign mounting brackets. Includes all materials, equipment, labor, and incidental items necessary to provide and install the overhead sign structure as specified in the contract. Includes all work associated with development, review, and verification of shop drawings and overhead sign structural design items.	
104	02221009*	Remove Overhead Sign Structure	each
		Includes: A. All appurtenances and connections. B. Signs. C. Removal of foundation to 2 feet below finished grade and backfill.	
105	028930025	60 Inch Overhead Sign Foundation	each
		Includes all materials, equipment, labor, and incidental items necessary to provide overhead sign foundations. Includes conduit, steel reinforcement, anchor bolt templates, and grounding materials associated with the overhead sign foundation.	
106	02893006P	30 Inch Overhead Cantilever Sign Structure	each
		Includes sign mounting brackets. Includes all materials, equipment, labor, and incidental items necessary to provide and install the overhead sign structure as specified in the contract. Includes all work associated with development, review, and verification of shop drawings and overhead sign structural design items.	
107	02893007P	Relocate 30 Inch Overhead Cantilever Sign Structure	each
		Includes all materials, equipment, labor, sign mounting brackets, and incidental items necessary to relocate and install existing overhead sign structure as shown in the plans. Includes all work associated with development, review, and verification of shop drawings and overhead sign structural design items. Includes inspection of existing overhead sign structure elements before installing on new foundation.	
108	028930015	42 inch Overhead Sign Foundation	each
		Includes all materials, equipment, labor, and incidental items necessary to provide overhead sign foundations. Includes conduit, steel reinforcement, anchor bolt templates, and grounding materials associated with the overhead sign foundation.	
109	02893007P	18 Inch Overhead Butterfly Sign Structure	each
		Includes mounting brackets. Includes all materials, equipment, labor, and incidental items necessary to provide and install the overhead sign structure as specified in the contract. Includes all work associated with development, review, and verification of shop drawings and overhead sign structural design items.	
110	03310001P	54 Inch Reinforced Concrete Headwall (Est. Structural Concrete Qty: 8.7 cu yd)	each
		Item includes all materials to construct the headwall A. Department will make no separate payment for excavation for structures. B. Department will make no separate payment for Structural Concrete or Reinforcing Steel. C. Includes the coating on all bars. D. Department will not make allowances for extra reinforcing steel required to provide lap splices that are requested by the Contractor. E. Department will not make allowances for clips, chairs, wire, or other materials used for fastening reinforcement in place. Includes all costs for demolition and removal of existing headwall.	
111	02831001*	MSE Retaining Wall R-800 (Est. Lump Qty: 9205 sq ft)	lump sum
		Quantities represent exposed face of wall. Vertical and horizontal wall embeddments are not included in wall quantity and are incidental to the retaining wall pay item. Formliner and coloring are incidental to this item.	
112	02839001*	Prefabricated Modular Gravity Wall R-801 (Est. Lump Qty: 3558 sq ft)	lump sum
		Quantities represent exposed face of wall. Vertical and horizontal wall embeddments are not included in wall quantity and are incidental to the retaining wall pay item. Wall coloring, geotextile, perforated drain pipe, select material for prefabricated modular gravity wall, and free draining granular backfill are all incidental to this item.	
113	023760020	Flexible Channel Liner	square yard
		Measurement does not include overlaps.	
114	02912005P	Strip, Stockpile, and Spread Topsoil	1000 square feet
115	02913000*	Rock Mulch	1000 square feet

Item #	Bid Item Number	Bid Item Name	UOM
		Includes all materials, equipment, and labor necessary to place rock mulch as shown in the plans and special provision. Includes Weed Barrier Geotextiles, including all materials, equipment, and labor necessary to remove existing ground cover and place weed barrier geotextile as shown in the project plans and special provision. Includes excavation necessary along edges of rock mulch to install rock mulch flush with adjacent ground surfaces. Calculated using the in-place surface area.	
116	02922003P	Broadcast Seed (Floodplain Mix)	1000 square feet
		Includes wood fiber mulch and tackifier.	
117	02922004P	Broadcast Seed	1000 square feet
		Includes wood fiber mulch and tackifier.	
118	02931001*	Cottonwood Pole Planting	each
		Includes only local cottonwood cuttings.	
119	02931002*	Willow Cutting	each
120	027650040	Remove Pavement Message	each
		A. Measure each letter or single arrow as one pavement message. B. Measure two-headed arrows as two pavement messages. C. Unauthorized removals will not be paid for.	
121	027650050	Pavement Marking Paint	gallon
122	027680105	Pavement Message (Preformed Thermoplastic)	each
		Measurement A. Letter = one message B. Arrow = one message C. Multi-headed arrow = one message per arrow D. School crossbars = one message per 24 inch x 10 ft bar E. Crosswalk = two message per lane and two messages per shoulder F. Stop Bar = one message per lane and one message per shoulder G. Railroad crossing markings = seven messages per lane 1. R = one message each (two required) 2. X = two messages 3. Transverse Bar = one message each (two required) 4. Stop Bar = one message H. Include all costs for the Manufacturer's Service Representative and other technical assistance in the contract unit price.	
123	028910070	Sign Type A-1, 48 inch X 48 inch	each
		Includes frame or mounting bar as required in SN Series Standard Drawings.	
124	028910075	Sign Type A-2	square foot
		Non Standard size signs. Includes frame or mounting bar as required in SN Series Standard Drawings.	
125	02891020P	Sign Type A-2, 12 Inch x 24 Inch	each
		Includes frame or "Z" bar as required in SN Series Standard Drawings.	
126	028910270	Remove Sign Less Than 20 Square Feet	each
127	028910275	Remove Sign Greater Than or Equal to 20 Square Feet	each
128	028910285	Relocate Sign Less Than 20 Square Feet	each
		Includes removal and disposal of existing concrete sign base.	
129	028910290	Relocate Sign Greater Than or Equal to 20 Square Feet	each
		Includes removal and disposal of existing concrete sign base.	
130	02891030P	Small Sign Tubular Steel Post Base (B2A) (Triangular Steel Anchor System)	each
		Includes installation of socket, wedge, and concrete foundation as required by SN Series Standard Drawings.	
131	028910345	Sign Post Base (B6A) for Standard Pipe Posts	each
		Includes incline base, installation of concrete foundation, and hardware to mount base to post as required by SN Series Standard Drawings.	

Item #	Bid Item Number	Bid Item Name	UOM
132	028910350	Sign Post Base (B6B) For S Section Steel Posts	each
		Includes base, installation of concrete foundation, and hardware to mount base to post as required by SN Series Standard Drawings.	
133	028910360	Sign Post P2	each
		Includes post and all hardware to mount sign to post as required by SN Series Standard Drawings.	
134	028910420	Post S8 X 18.4	each
		Includes post, post to base connection plate, fuse and splice plates, and all hardware to mount sign to post as required by SN Series Standard Drawings.	
135	028910450	Post 4 Inch Standard Pipe	each
		Includes post, inclined post to base connection plate, and all hardware to mount sign to post as required by SN Series Standard Drawings.	
136	028910455	Post 5 Inch Standard Pipe	each
		Includes post, base to post connection plate, fuse and splice plates, and all hardware to mount sign to post as required by SN Series Standard Drawings.	
137	02891050P	Relocate Sign Panel	each
		Includes all labor, equipment, and materials to relocate the sign panel as per sheet SS-05.	
138	13551020P	Relocate Existing Power Conductors	lump sum
		Includes materials, labor, and equipment necessary to relocate and provide operational power conductors.	
139	135530015	One 2-Inch Conduit	foot
		A. Includes all materials, labor, workmanship, equipment, documentation, and incidental items required for a complete system of conduit as described in the contract. Conduit may be installed by trenching, boring, or plowing unless otherwise specified. B. Includes duct seal, pull tape, conduit sweeps, fittings, conduit proofing, backfill, and warning tape. C. Includes flowable fill.	
140	135530025	One 3-Inch Conduit	foot
		A. Includes all materials, labor, workmanship, equipment, documentation, and incidental items required for a complete system of conduit as described in the contract. Conduit may be installed by trenching, boring, or plowing unless otherwise specified. B. Includes duct seal, pull tape, conduit sweeps, fittings, conduit proofing, backfill, and warning tape. C. Includes flowable fill.	
141	135530040	2D Conduit	foot
		A. Includes all materials, labor, workmanship, equipment, documentation, and incidental items required for a complete system of conduit as described in the contract. Conduit may be installed by trenching, boring, or plowing unless otherwise specified. B. Includes duct seal, pull tape, conduit sweeps, fittings, conduit proofing, backfill, and warning tape. C. Includes flowable fill.	
142	13553005P	2D Conduit (2-Inch)	foot
		A. Includes all materials, labor, workmanship, equipment, documentation, and incidental items required for a complete system of conduit as described in the contract. Conduit may be installed by trenching, boring, or plowing unless otherwise specified. B. Includes duct seal, pull tape, conduit sweeps, fittings, conduit proofing, backfill, and warning tape. C. Includes flowable fill.	
143	135540020	Polymer Concrete Junction Box, Tier 22, Type I	each
		In place. Includes backfill, flowable fill, maintenance markers, conduit plugs, grounding materials, concrete collar, bolts expansion joint material, grout, and a locate ball or disk.	
144	135540030	Polymer Concrete Junction Box, Tier 22, Type II	each
		In place. Includes backfill, flowable fill, maintenance markers, conduit plugs, grounding materials, concrete collar, bolts expansion joint material, grout, and a locate ball or disk.	
145	135540040	Polymer Concrete Junction Box, Tier 22, Type III	each

Item #	Bid Item Number	Bid Item Name	UOM
		In place. Includes backfill, flowable fill, maintenance markers, conduit plugs, grounding materials, concrete collar, bolts expansion joint material, grout, and a locate ball or disk.	
146	13556020P	Relocate Existing CCTV / NID Site	lump sum
		Includes labor, equipment, and materials necessary to relocate and provide a fully operational CCTV system / NID Site.	
147	135940070	24 Strand SMFO Cable	foot
		Includes all materials, equipment, labor, labeling, and testing necessary to provide a fully operational system.	
148	13594010P	Relocate Existing 72 Strand SMFO Cable	lump sum
		Includes all materials, equipment, labor, labeling, and testing necessary to provide a fully operational system.	
149	135940130	Fusion Splice	each
		Includes all fusion splicing as specified in the contract, materials, equipment, labor, labeling, coordination, documentation, testing, and incidental items necessary to provide a fully operational system.	
150	135940150	Type B Splice Enclosure	each
		Furnish and install.	
151	13594020P	6 Strand Pre-Terminated Drop Cable Unit	foot
		Includes connectors and 6 strand fan-out kit.	

VII. Standard Drawings Index

STANDARD DRAWINGS INDEX (Supplemental Issue #16, May 12, 2016)
UTAH DEPARTMENT OF TRANSPORTATION

NUMBER	TITLE	CURRENT DATE
	Advanced Traffic Management System (AT)	
AT 1	Legend Sheet	10/22/15
AT 2A	Ramp Meter Details	01/01/12
AT 2B	Ramp Meter Details	01/01/12
AT 3	Ramp Meter Overhead Sign Panel	01/01/12
AT 4	Typical Ramp Meter Signal Head Mounting	01/01/12
AT 5A	Ramp Meter Detection Layout	02/28/13
AT 5B	Ramp Meter Queue Detection Layout	02/28/13
AT 5C	Ramp Meter Detection Zone Number Assignment	02/28/13
AT 6	Conduit Details	10/22/15
AT 7A	Polymer Concrete Junction Box Details	10/22/15
AT 7B	Precast Concrete Fiber Optic and Utility Vault Details	10/22/15
AT 8	ATMS Cabinet	01/01/12
AT 9	ATMS Cabinet Disconnect and Transformer Frame	01/01/12
AT 10A	CCTV Mounting Detail and Wiring Diagram	01/01/12
AT 10B	CCTV Mounting Detail and Wiring Diagram	01/01/12
AT 10C	CCTV Mounting Detail and Wiring Diagram	01/01/12
AT 10D	Camera Cable Splicing Diagrams	01/01/12
AT 10E	CCTV DIP Switch Settings	10/22/15
AT 11A	CCTV Pole Mounting Details	10/31/13
AT 11B	Non-Intrusive Detector Mounting Details	10/31/13
AT 11C	Pole Mounted Cabinet Bracket	10/31/13
AT 12	CCTV Foundations for CCTV Pole	10/22/15
AT 13	HAR Pole Detail	01/01/12
AT 14	Weigh In Motion Piezo Details	01/01/12
AT 15	RWIS Site and Foundation Details	10/31/13
AT 16	RWIS Tower Base and Service Pad Layout	10/31/13
AT 17	RWIS Ground Rod Installation and Tower Grounding	10/31/13
AT 18	Utility Marker Post Details	10/22/15
AT 19	Utility Marker Post Locations	10/22/15
AT 20	Electronic Toll Lanes Control Systems (ETC)	10/22/15
AT 21	Electronic Toll Lanes Control Systems (ETC Gantry)	10/22/15
AT 22	Attachment Details	10/22/15
AT 23	ETC Equipment Wiring Diagram	10/22/15
	Barriers (BA)	
BA 1A1	Concrete Barrier General Notes and Standard Details 1 of 2	01/01/12
BA 1A2	Concrete Barrier General Notes and Standard Details 2 of 2	06/26/14
BA 1B	Concrete Barrier Median Installation	01/01/12
BA 1C	Concrete Barrier Shoulder Installation	01/01/12

State Projects With Full Size Plan Sheets

BA 1D	Concrete Barrier Layout	01/01/12
BA 1E	Concrete Barrier Column Protection	02/27/14
BA 2A	Precast Concrete Barrier – 32 Inch New Jersey Shape	06/26/14
BA 2B	Precast Concrete Barrier – 32 Inch New Jersey Shape, Sloped End Section (Speeds ≤ 40 MPH)	01/01/12
BA 2C	Precast Concrete Barrier – 32 Inch New Jersey Shape, Median Small Sign Section	06/26/14
BA 2D	Cast-In-Place Concrete Barrier – 32 Inch New Jersey Shape, 42 Inch Constant Slope Barrier Transition	06/26/14
BA 2E	Precast Concrete Half Barrier – 32 Inch New Jersey Shape	06/26/14
BA 3A1	Cast-In-Place Concrete Constant Slope Barrier – 42 Inch 1 of 3	01/01/12
BA 3A2	Cast-In-Place Concrete Constant Slope Barrier – 42 Inch 2 of 3	01/01/12
BA 3A3	Cast-In-Place Concrete Constant Slope Barrier – 42 Inch 3 of 3	01/01/12
BA 3B	Cast-In-Place Concrete Constant Slope Barrier – 42 Inch, Electrical Details	01/01/12
BA 3C1	Cast-In-Place Concrete Constant Slope Barrier – 42 Inch, Sign Structure Foundation Transition 1 of 2	01/01/12
BA 3C2	Cast-In-Place Concrete Constant Slope Barrier – 42 Inch, Sign Structure Foundation Transition 2 of 2	01/01/12
BA 3D	Cast-In-Place Concrete Constant Slope Barrier – 42 Inch, Median Small Sign Section	01/01/12
BA 3E1	Cast-In-Place Concrete Constant Slope Barrier – 42 Inch, TL-5 1 of 2	01/01/12
BA 3E2	Cast-In-Place Concrete Constant Slope Barrier – 42 Inch, TL-5 2 of 2	01/01/12
BA 3F1	Cast-In-Place Concrete Constant Slope Barrier – 42 Inch, Bridge Parapet Transition 1 of 3	01/01/12
BA 3F2	Cast-In-Place Concrete Constant Slope Barrier – 42 Inch, Bridge Parapet Transition 2 of 3	01/01/12
BA 3F3	Cast-In-Place Concrete Constant Slope Barrier – 42 Inch, Bridge Parapet Transition 3 of 3	01/01/12
BA 3G	Precast Concrete Constant Slope Barrier – 42 Inch	01/01/12
BA 3H	Precast Concrete Constant Slope Barrier – 42 Inch, Sloped End Section (Speeds ≤ 40 MPH)	01/01/12
BA 3I1	Precast Concrete Constant Slope Barrier – 42 Inch, Median Small Section 1 of 2	01/01/12
BA 3I2	Precast Concrete Constant Slope Barrier – 42 Inch, Median Small Section 2 of 2	01/01/12
BA 3J	Precast Concrete Constant Slope Barrier – 42 Inch, 32 Inch New Jersey Shape Transition	01/01/12
BA 3K	Cast-In-Place Concrete Constant Slope Half Barrier – 42 Inch	01/01/12
BA 3L	Precast Concrete Constant Slope Half Barrier – 42 Inch	08/30/12

BA 3M1	Cast-In-Place Concrete Constant Slope Barrier – 54 Inch 1 of 3	01/01/12
BA 3M2	Cast-In-Place Concrete Constant Slope Barrier – 54 Inch 2 of 3	01/01/12
BA 3M3	Cast-In-Place Concrete Constant Slope Barrier – 54 Inch 3 of 3	01/01/12
BA 3N1	Cast-In-Place Concrete Constant Slope Barrier – 54 Inch, Median Small Sign Section 1 of 2	01/01/12
BA 3N2	Cast-In-Place Concrete Constant Slope Barrier – 54 Inch, Median Small Sign Section 2 of 2	01/01/12
BA 3O1	Cast-In-Place Concrete Constant Slope Barrier – 54 Inch, TL-5 1 of 3	01/01/12
BA 3O2	Cast-In-Place Concrete Constant Slope Barrier – 54 Inch, TL-5 2 of 3	01/01/12
BA 3O3	Cast-In-Place Concrete Constant Slope Barrier – 54 Inch, TL-5 3 of 3	01/01/12
BA 3P1	Cast-In-Place Concrete Constant Slope Barrier – 54 Inch, Bridge Parapet Transition 1 of 3	01/01/12
BA 3P2	Cast-In-Place Concrete Constant Slope Barrier – 54 Inch, Bridge Parapet Transition 2 of 3	01/01/12
BA 3P3	Cast-In-Place Concrete Constant Slope Barrier – 54 Inch, Bridge Parapet Transition 3 of 3	01/01/12
BA 3Q	Cast-In-Place Concrete Constant Slope Barrier – 54 Inch, 42 Inch Constant Slope Barrier Transition	01/01/12
BA 4A	W-Beam Guardrail Hardware	01/01/12
BA 4B1	W-Beam Guardrail Transition Hardware	01/01/12
BA 4B2	W-Beam Guardrail Transition Layouts Approach End and Trailing End	01/01/12
BA 4B3	W-Beam Guardrail Transition Curb Sections	10/31/13
BA 4B4	W-Beam Guardrail Median Barrier Transition Hardware and Layout	08/30/12
BA 4C1	W-Beam Guardrail Anchor Type 1	08/29/13
BA 4C2	W-Beam Guardrail Anchor Type II	01/01/12
BA 4D1	W-Beam Guardrail Installations	08/30/12
BA 4D2	W-Beam Guardrail Installations	01/01/12
BA 4D3	W-Beam Guardrail Typical Line Post Embedment Special Conditions	08/27/15
BA 4E1	W-Beam Guardrail with Modified Curb and Gutter	01/01/12
BA 4E2	W-Beam Guardrail with Curb and Gutter ≥ 5 Inches	08/30/12
BA 4F1	W-Beam Guardrail Buried In Backslope Terminal	08/30/12
BA 4F2	W-Beam Guardrail Buried In Backslope Terminal with Rub Rail	01/01/12
BA 4F3	W-Beam Guardrail Buried In Backslope Terminal Anchor	01/01/12
BA 4G	W-Beam Guardrail Curve Breakaway Details	06/26/14
BA 4H1	W-Beam Guardrail Nested Rail 12 Ft 6 Inch Span	01/01/12
BA 4H2	W-Beam Guardrail Nested Rail 18 Ft 9 Inch Span	01/01/12

BA 4H3	W-Beam Guardrail Nested Rail 25 Ft Span	01/01/12
BA 4H4	W-Beam Guardrail with Precast Barrier For Span ≥ 25 Ft	08/30/12
BA 4H5	W-Beam Guardrail Reduced Deflection Criteria	01/01/12
BA 4I	W-Beam Guardrail Right Shoulder Transition On Slopes Steeper Than 10:1 or Flatter or Equal to 6:1	01/01/12
BA 4J1	W-Beam Guardrail Typical Divided Roadways	01/01/12
BA 4J2	W-Beam Guardrail Typical Multilane Arterial	01/01/12
BA 4J3	W-Beam Guardrail Typical 2 Lane 2 Way	01/01/12
BA 5A	Cable Barrier Typical Hardware and Foundation Requirements	10/22/15
BA 5B1	Cable Barrier Placement	06/26/14
BA 5B2	Cable Barrier Placement	06/26/14
BA 5C1	Cable Barrier W-Beam Anchor Assembly	01/01/12
BA 5C2	Cable Barrier Parapet Departure Bracket	01/01/12
BA 5D1	Median Cable Barrier W-Beam Double Sided and Freeway Crossover Anchor System (Type C; C.A.T., Brakemaster)	10/31/13
BA 5D2	Median Cable Barrier W-Beam Double Sided and Freeway Crossover Anchor System (Type C; FLEAT-MT)	10/31/13
BA 5E1	Cable Barrier W-Beam Narrow Median Parapet or Concrete Barrier Anchor	01/01/12
BA 5E2	Cable Barrier W-Beam Approach Transition	01/01/12
BA 5E3	Cable Barrier W-Beam Precast Concrete Barrier Trailing Anchor	01/01/12
BA 5F1	Cable Barrier W-Beam Single Sided Approach Anchor System	01/01/12
BA 5F2	Cable Barrier W-Beam Single Sided Departure Anchor System	01/01/12
BA 5G	Cable Barrier W-Beam Freeway/Expressway Right Shoulder Anchor System	01/01/12
BA 5H	Cable Barrier W-Beam Right Shoulder Application	01/01/12
BA 5I1	Cable Barrier with Existing W-Beam Approach	01/01/12
BA 5I2	Cable Barrier with Existing W-Beam Trailing End	01/01/12
BA 5J1	Cable Barrier Median Hazard Protection	08/29/13
BA 5J2	Cable Barrier Span Greater Than or Equal 15 Ft to Less Than or Equal 30 Ft	08/29/13
BA 5K	Cable Barrier with Existing Crash Cushion Median Application	01/01/12

Catch Basins and Cleanouts (CB)

CB 1	Curb and Gutter Inlet	01/01/12
CB 2	Open Curb Inlet	01/01/12
CB 3	Shallow Catch Basin	01/01/12
CB 4	Open Curb Shallow Catch Basin	01/01/12
CB 5A	Standard Catch Basin and Cleanout Box	01/01/12
CB 5B	Standard Catch Basin and Cleanout Box Section	01/01/12
CB 6A	Drop Inlet Type “A”	01/01/12
CB 6B	Berm Apron with Drop Inlet Type “A”	01/01/12

CB 7A	Drop Inlet Type “B”	01/01/12
CB 7B	Normal Apron with Drop Inlet Type “B”	01/01/12
CB 8A	Double Catch Basin	01/01/12
CB 8B	Double Catch Basin	01/01/12
CB 9A	Standard Catch Basin and Cleanout Box Situation and Layout	01/01/12
CB 9B	Standard Catch Basin and Cleanout Box Section Details	01/01/12
CB 9C	Standard Catch Basin and Cleanout Box Schedule of Installation 18 Inch to 42 Inch RCP 12 Inch to 48 Inch CMP	01/01/12
CB 9D	Standard Catch Basin and Cleanout Box Schedule of Installation 48 Inch to 66 Inch RCP 60 Inch to 78 Inch CMP	01/01/12
CB 10A	Standard Catch Basin and Cleanout Box Situation and Layout	01/01/12
CB 10B	Standard Catch Basin and Cleanout Box Section Details	01/01/12
CB 10C	Standard Catch Basin and Cleanout Box Schedule of Installation 42 Inch to 60 Inch RCP 48 Inch to 72 Inch CMP	01/01/12
CB 11	Precast Concrete Standard Manhole	02/28/13
CB 12	Precast Concrete Drainage Box	01/01/12

Crash Cushions (CC)

CC 1	Crash Cushion and End Treatment Markings	01/01/12
CC 2	Crash Cushion Drainage Details Guideline A	01/01/12
CC 3	Crash Cushion and End Treatments Drainage Details Guideline B	01/01/12
CC 4A	Details for Placement Crash Cushions Type A, B, And D	01/01/12
CC 4B	Crash Cushion Mounted On Median Island	01/01/12
CC 4C	Crash Cushion Split Median Island w/RR Crossing	01/01/12
CC 5A	Grading and Placement Details Crash Cushion Type C Brakemaster	01/01/12
CC 5B	Grading and Placement Details Crash Cushion Type C C.A.T	01/01/12
CC 5C	Grading and Placement Details Crash Cushion Type C FLEAT-MT	01/01/12
CC 6	Crash Cushion Type E Sand Barrel Details	01/01/12
CC 7A	Grading and Installation Details End Treatment Type F Quad Trend 350	01/01/12
CC 7B	Grading and Installation Details End Treatment Type F BEAT-SSCC	01/01/12
CC 8A	Grading and Installation Details Crash Cushion Type G	06/27/13
CC 8B	Grading and Installation Details for “3R” Projects End Treatment Type G	06/27/13
CC 9A	Grading and Installation Details End Treatment Type H	01/01/12
CC 9B	Maintenance Only Grading and Installation Details End Treatment Type H	01/01/12

Diversion Boxes (DB)

DB 1A	Standard Diversion Box/Cover Plate/Grating for 18 Inch DIA. or 24 Inch DIA. Pipe	01/01/12

DB 1B	Standard Diversion Box Hinged Lid Details for 18 Inch DIA or 24 Inch DIA Pipe	01/01/12
DB 1C	Standard Diversion Box Bicycle Safe Grating Details for 18 Inch DIA or 24 Inch DIA Pipe	01/01/12
DB 1D	Standard Diversion Box Three Gate Box Sections for 18 Inch DIA or 24 Inch DIA Pipe	01/01/12
DB 1E	Standard Diversion Box Three Gate Box Sections for 18 Inch DIA or 24 Inch DIA Pipe	01/01/12
DB 1F	Standard Diversion Box Three Gate Box Sections for 18 Inch DIA or 24 Inch DIA Pipe	01/01/12
DB 2A	Standard Diversion Box w/Interchangeable Walls, Bottom Slab, Walls, and Apron Details	01/01/12
DB 2B	Standard Diversion Box w/Interchangeable Walls, Quantities Schedule	01/01/12
DB 2C	Standard Diversion Box w/Interchangeable Walls, Hand Slide Gate Details	01/01/12
DB 2D	Standard Diversion Box Type G Hand Slide Gate Details	01/01/12
DB 2E	Standard Diversion Box Hinged Lid (Solid Cover Plate) Type A Details Type I Plan	01/01/12
DB 2F	Standard Diversion Box Hinged Lid (Solid Cover Plate) Type A Details Type II Plan	01/01/12
DB 2G	Standard Diversion Box Hinged Lid Solid Cover Type B Details	01/01/12
DB 2H	Standard Diversion Box Hinged Lid Solid Cover Type B and C Details	01/01/12
DB 3A	Standard Diversion Box with Manhole Cover Situation and Layout	01/01/12
DB 3B	Standard Diversion Box with Manhole Cover Up to 42 Inch RCP and Up To 54 Inch CMP	01/01/12
DB 3C	Standard Diversion Box with Manhole Cover 48 Inch to 72 Inch RCP and 60 Inch to 84 Inch CMP	01/01/12
DB 4	Standard Transition Concrete Lined Ditch to Pipe or Diversion Box	01/01/12

Design Drawings (DD)

DD 1	Superelevation, Widening, and Edge Detail	01/01/12
DD 2	Surface Ditch, Benched Slope, and Cut Ditch Details	01/01/12
DD 3	Passing and Climbing Lanes	04/30/15
DD 4	Geometric Design for Freeways (Roadway)	01/01/12
DD 5A	Entrance and Exit Ramps At Crossroads	01/01/12
DD 5B	Entrance and Exit Ramps At Crossroads	01/01/12
DD 6	Entrance and Exit Ramp Geometrics	01/01/12
DD 7	Freeway Crossover	01/01/12
DD 8	Structural Geometric Design Standards for Clearances	02/28/13
DD 9	Structural Geometric Design Standards	01/01/12
DD 10	Rural Multi Lane Highways Other Than Freeways	01/01/12

DD 11	Rural Two Lane Highways	01/01/12
DD 12	Frontage and Access Roads (Under 50 ADT)	01/01/12
DD 13A	Typical Rural 2 Lane Road T-Intersection (High Speed)	01/01/12
DD 13B	Typical Rural 2 Lane Road T-Intersection (Low Speed) 40 MPH or Less	01/01/12
DD 14A1	Typical Rural 2 Lane Road Intersection (High Speed) 45 MPH or Higher	01/01/12
DD 14A2	Typical Rural 2 Lane Road Intersection (High Speed) with Left Turn Acceleration Lane	01/01/12
DD 14B	Typical Rural 2 Lane Road Intersection (Low Speed)	08/30/12
DD 15	Embankment for Bridge Placement	01/01/12
DD 16	Grade-Separated Arterials Other Than Freeways 50 to 60 MPH	01/01/12
DD 17	Clear Zone and Lateral Offset to Obstruction	01/01/12
DD 18	Utility Location Requirements	06/27/13
DD 19	Marked Pedestrian Crosswalk Enhancement Flowchart	04/30/15

Drainage (DG)

DG 1	Fill Height for Metal Pipe (Steel)	01/01/12
DG 2	Fill Height for Metal Pipe (Aluminum)	01/01/12
DG 3	Fill Height for Plastic and Concrete Pipe	02/27/14
DG 4	Pipe Minimum Cover and Spacing	02/25/16
DG 5	Drainage Pipe Installation	02/27/14
DG 6	Safety Slope End Section for Circular and Arched Pipes	01/01/12
DG 7	Gasketed Joints or Coupling Bands for CMP	01/01/12
DG 8	Metal Culvert End Section	01/01/12
DG 9	Concrete Pipe Culvert End Sections	01/01/12

Environmental Controls (EN)

EN 1	Temporary Erosion Control (Check Dams)	01/01/12
EN 2	Temporary Erosion Control (Silt Fence)	01/01/12
EN 3	Temporary Erosion Control (Slope Drain and Temporary Berm)	02/26/15
EN 4	Temporary Erosion Control (Drop Inlet Barriers)	01/01/12
EN 5	Temporary Erosion Control (Pipe Inlet and Gutter Inlet Barriers)	01/01/12
EN 6	Temporary Erosion Control (Sediment Trap and Stabilized Construction Entrance)	01/01/12
EN 7	Temporary Erosion Control (Straw Bale Barrier)	01/01/12

Fence and Gates (FG)

FG 1A	Right Of Way Fence and Gates (Wood Post)	01/01/12
FG 1B	Right Of Way Fence and Gates (Wood Post)	01/01/12
FG 2A	Right Of Way Fence and Gates (Metal Post)	01/01/12
FG 2B	Right Of Way Fence and Gates (Metal Post)	01/01/12
FG 3	Swing Gates Type I for Gates Less Than 17 FT	01/01/12

FG 4A	Standard Wildlife Escape Ramp Details	01/01/12
FG 4B	High Migratory Wildlife Escape Ramp Details	01/01/12
FG 4C	Corner Brace Wildlife Escape Ramp Details	01/01/12
FG 4D	Wildlife Pole Fence Detail	01/01/12
FG 5	Swing Gates Type II for Gates Wider Than 17 FT	01/01/12
FG 6	Chain Link Fence	01/01/12

Grates, Frames, and Trash Racks (GF)

GF 1	Manhole Frame and Grated Cover	01/01/12
GF 2	Manhole Frame and Solid Cover	01/01/12
GF 3	Rectangular Grate and Frame	01/01/12
GF 4	Directional Flow Grate and Frame	01/01/12
GF 5	Solid Cover and Frame	01/01/12
GF 6	Manhole Steps	01/01/12
GF 7	Standard Screw Gate and Frame	01/01/12
GF 8	2 FT x 2 FT Grate and Frame	01/01/12
GF 9	28 Inches x 24 Inches Directional Flow Grate and Frame	01/01/12
GF 10	Standard Trash Racks 90 Degree Crossing Angle	01/01/12
GF 11	Standard Trash Racks	01/01/12
GF 12	Standard Trash Racks	01/01/12
GF 13	Open Curb Inlet Grate and Frame	01/01/12
GF 14	Solid Cover for Std Dwg DB 1	01/01/12
GF 15	Standard Screw Grate and Frame	01/01/12
GF 16	Perpendicular Grate and Frame	01/01/12

General Road Work (GW)

GW 1A	Raised Island	01/01/12
GW 1B	Raised Island and Plowable End Section	10/31/13
GW 1C	Raised Island Details	06/26/14
GW 1D	Median Reflector Details	10/31/13
GW 2	Concrete Curb and Gutter Types	01/01/12
GW 3	Concrete Curb and Gutter Details	01/01/12
GW 4A	Concrete Driveways and Sidewalks	02/28/13
GW 4B	Concrete Driveways and Sidewalks	02/28/13
GW 5A	Pedestrian Access	11/06/14
GW 5B	Pedestrian Access	11/06/14
GW 5C	Pedestrian Access	11/06/14
GW 5D	Pedestrian Access	11/06/14
GW 6	Right Of Way Marker	01/01/12
GW 7	Newspaper and Mailbox Stop Layout	01/01/12
GW 8	Newspaper and Mailbox Supports	01/01/12
GW 9A	Delineation Hardware	01/01/12
GW 9B	Linear Delineation Panel and Installation Details	01/01/12
GW 10	Delineation Application	01/01/12
GW 11	Sidewalks and Shoulders On Urban Roadways	02/28/13

GW 12A1	Active Pedestrian Controls for Railroad Crossings Sheet 1 of 2	04/25/13
GW 12A2	Active Pedestrian Controls for Railroad Crossings Sheet 2 of 2	04/25/13
GW 12B1	Passive Pedestrian Controls for Railroad Crossings Sheet 1 of 2	04/25/13
GW 12B2	Passive Pedestrian Controls for Railroad Crossings Sheet 2 of 2	04/25/13
GW 12C1	Pedestrian Controls Semi-Exclusive Railroad Alignments Sheet 1 of 2	04/25/13
GW 12C2	Pedestrian Controls Semi-Exclusive Railroad Alignments Sheet 2 of 2	04/25/13
GW 12D	Pedestrian Controls Street Running Railroad Alignment Signalized Intersections	04/25/13
GW 12E	Pedestrian Controls Street Running Railroad Alignment Unsignalized Intersections	04/25/13

Paving (PV)

PV 1	Joints for Highways with Concrete Traffic Lanes and Shoulders	01/01/12
PV 2	Pavement/Approach Slab Details	01/01/12
PV 3	Concrete Pavement Details 1 of 2	11/06/14
PV 4	Concrete Pavement Details 2 of 2	04/30/15
PV 5	Urban Concrete Pavement Details	01/01/12
PV 6A	Rumble Strips Shoulder Details	04/30/15
PV 6B	Rumble Strips Depth and Location Details	04/30/15
PV 7A	Typical Rumble Strip Shoulder Sequencing and Applications	04/30/15
PV 7B	Typical Rumble Strip Center Line Sequencing and Application	04/30/15
PV 8	Typical Rumble Strip Centerline Application	04/30/15
PV 9	Dowel Bar Retrofit	02/28/13
PV 10	Utility Orientation/Adjustments in PCCP	10/31/13

Signals (SL)

SL 1A	Traffic Signal Mast Arm Pole and Luminaire Extension 30 Ft Through 55 Ft	**04/28/16**
SL 1B	Traffic Signal Mast Arm Pole and Luminaire Extension 60 Ft Through 75 Ft	**04/28/16**
SL 1C	Traffic Signal Mast Arm Pole and Luminaire Extension 80 Ft Through 85 Ft	**04/28/16**
SL 1D	Traffic Signal Dual Mast Arm	**04/28/16**
SL 2A	Traffic Signal Mounting	**04/28/16**
SL 2B	Traffic Signal Mounting	**04/28/16**
SL 2C	Mast Arm Sign Mounting	**04/28/16**
SL 2D	Traffic Signal Head Wiring	**04/28/16**
SL 3	Underground Service Pedestal Details	01/01/12

SL 4	Traffic Signal Mast Arm Pole Foundation	02/26/15
SL 5	Traffic Signal Pole	01/01/12
SL 6	Traffic Signal Heads	**04/28/16**
SL 7	Pedestrian Signal Assembly	11/06/14
SL 8	Traffic Signal Cabinet Base Details	01/01/12
SL 9	Traffic Signal Loop Detector Details	01/01/12
SL 10	Traffic Counting Loop Detector Details	01/01/12
SL 11	Highway Luminaire Pole Ground Mount	01/01/12
SL 12	Highway Luminaire Slip Base Details	02/25/16
SL 13	Highway Luminaire Arm and Vertical Extension	**04/28/16**
SL 14	Highway Luminaire Pole Foundation Extension	02/25/16
SL 15	Single Transformer Substation Details	01/01/12
SL 16	Solar Traffic Counting Station	06/26/14
SL 17A	Pedestrian Signal Crosswalk	04/30/15
SL 17B	Pedestrian Hybrid Beacon Crosswalk	04/30/15
SL 17C	Flashing Beacon at a Crosswalk Intersection	04/30/15
SL 17D	Flashing Beacon at Midblock Crosswalk	04/30/15
SL 18	Advance Warning Signal (AWS) System	**04/28/16**

Signs (SN)

SN 1	Signs At Railroad Crossings	01/01/12
SN 2A	School Speed Limit Assembly	11/06/14
SN 2B	School Speed Limit Assembly	01/01/12
SN 3	Overhead School Speed Limit Assembly	10/31/13
SN 4	Object Markers "T" Intersection and Pavement Transition Guidance	01/01/12
SN 5	Typical Installation for Milepost Signs	01/01/12
SN 6	Speed Reduction Sign Sequence	10/31/13
SN 7A	Placement of Ground Mount Signs	01/01/12
SN 7B	Placement of Ground Mount and Barrier Mount Signs	01/01/12
SN 8A	Temporary Use Ground Mounted Timber Sign Post	01/01/12
SN 8B	Temporary Use Ground Mounted Square Steel Sign Post	01/01/12
SN 9A	Small Sign Tubular Steel Post Base with Concrete (B1) (Socket System)	01/01/12
SN 9B	Small Sign Tubular Steel Post Base (B2A) (Triangular Steel Anchor System)	01/01/12
SN 9C	Small Sign Tubular Steel Post Base with Concrete (B2B) (Triangular Steel Anchor System in Concrete)	01/01/12
SN 10A	Slipbase Sign Base (B3) Hardware	02/28/13
SN 10B	Slipbase Sign Base (B3) Installation	02/28/13
SN 11A	Surface Mounted Tubular Steel Sign Base (B4A)	01/01/12
SN 11B	Side Mounted Tubular Steel Sign Base (B4B)	01/01/12
SN 12A	Barrier Mounted Tubular Steel Sign Bases (B5A and B5B)	01/01/12
SN 12B	Barrier Mounted Tubular Steel Sign Bases 20 SQ Ft or Less	01/01/12
SN 13A	Tubular Steel Sign Mounting Requirements	10/31/13
SN 13B	Tubular Steel Sign Mounting Hardware	01/01/12

SN 13C	Mounting Bar Placement for Small Signs	02/27/14
SN 14A	Freeway Sign Post Requirements	01/01/12
SN 14B	Freeway Sign Base and Post Requirements (B6A-B6B-B6C)	01/01/12
SN 14C	Freeway Sign Foundation and Fuse Plate Requirements	01/01/12
SN 14D	Freeway Sign Frame Fabrication Details	08/30/12
SN 14E	Freeway Sign Bracket Details	08/30/12
SN 15	Mounting Brackets and Clamps	01/01/12
SN 16A	Multi-Directional Breakaway Base for Steel I-Beam Supports, General Notes	11/06/14
SN 16B	Multi-Directional Breakaway Base for Steel I-Beam Sign Supports, Two Posts	11/06/14
SN 16C	Multi-Directional Breakaway Base for Steel I-Beam Sign Supports, Three Posts	11/06/14
SN 16D	Multi-Directional Breakaway Base for Steel I-Beam Sign Supports, Foundation Details	11/06/14
SN 16E	Multi-Directional Breakaway Base for Sign Post, (B7A)	11/06/14
SN 16F	Multi-Directional Breakaway Base for Sign Post, (B7B)	11/06/14
SN 16G	Multi-Directional Breakaway Base for Sign Post, (B7C)	11/06/14
SN 16H	Multi -Directional Breakaway Base for Round Pipe Single Post, (B7D)	11/06/14
SN 16I	Multi -Directional Breakaway Base for Round Pipe Double Post, (B7D)	11/06/14
SN 17	Freeway Crossover Signing	01/01/12
SN 18	Chevron Alignment Signs	01/01/12
SN 19A	Preferential Lane Signing and Pavement Marking Details	04/30/15
SN 19B	Preferential Lane Access Opening Details	04/30/15
SN 19C	Preferential Lane Median Signing Spacing Greater 1 Mile	04/30/15
SN 19D	Preferential Lane Median Signing Spacing Equal to or Less Than 1 Mile	04/30/15

Striping (ST)

ST 1	Typical Pavement Markings No Pass Zone and Lane Reduction	04/30/15
ST 2	Typical Pavement Markings Entrance Ramps	01/01/12
ST 3A	Typical Pavement Markings Exit Ramps	01/01/12
ST 3B	Typical Pavement Markings Exit Ramps	01/01/12
ST 4	Crosswalks, Parking, and Intersection Approaches	01/01/12
ST 5	Painted Median and Auxiliary Lane Details	01/01/12
ST 6A	Passing Lane Details	04/30/15
ST 6B1	Freeway Climbing Lane Inside Widening Detail	04/30/15
ST 6B2	Freeway Climbing Lane Outside Widening Detail	04/30/15
ST 7	Pavement Markings at Railroad Crossing	01/01/12
ST 8	School Crossing and School Message	01/01/12
ST 9	Location of Bicycle Detector Pavement Markings at Intersection	11/06/14

ST 10	Location of Bicycle Detector Pavement Markings in Bicycle Lane	11/06/14

Structures and Walls (SW)

SW 1A	Welded End Guard Unit	01/01/12
SW 1B	Precast Concrete Cattle Guard	01/01/12
SW 2	Noise Wall Placement Options	01/01/12
SW 3A	Precast Concrete Noise Wall 1 of 2	01/01/12
SW 3B	Precast Concrete Noise Wall 2 of 2	01/01/12
SW 4A	Precast Concrete Retaining/Noise Wall 1 of 3	01/01/12
SW 4B	Precast Concrete Retaining/Noise Wall 2 of 3	01/01/12
SW 4C	Precast Concrete Retaining/Noise Wall 3 of 3	01/01/12
SW 5	Precast Pilaster Post	01/01/12
SW 6	Precast Concrete Panel Surface Texture Options	01/01/12

Traffic Control (TC)

TC 1	Traffic Control Drawing Series General Notes	08/30/12
TC 2A	Work Zone Channelization Devices	01/01/12
TC 2B	Work Zone Signing	08/30/12
TC 2C	Work Zone Advanced Warning Arrow Boards	06/26/14
TC 2D	Delineator Mounted Work Zone Sign Bracket	01/01/12
TC 3A	Hazard Mitigation	02/28/13
TC 3B	Hazard Mitigation and Positive Protection Devices	01/01/12
TC 4A	Standard Work Zone Signing General	08/30/12
TC 4B1	Reduced Speed Work Zone Signing General	08/30/12
TC 4B2	Reduced Speed Shoulder Work Zone Signing General	08/30/12
TC 4C	Traffic Control Project Limit Signing	08/30/12
TC 4D1	Work Zone Specialty Signs	10/31/13
TC 4D2	Work Zone Specialty Signs	10/31/13
TC 5	Traffic Control Urban Intersection with Roadways Under 50 MPH	01/01/12
TC 6	Temporary Pedestrian Access Route	01/01/12
TC 7	Median Crossover and 2-Lane, 2-Way Diversion	08/30/12
TC 8	Traffic Control Lane Closure	01/01/12
TC 9	Work Zone Business Access Signing	01/01/12
TC 10	Traffic Control Expressway and Freeway Crossover/Turn Around	01/01/12
TC 11	Traffic Control Exit Ramp Gore	01/01/12
TC 12	Traffic Control Entrance Ramp Gore	01/01/12
TC 13	Traffic Control Shoulder Haul Road	01/01/12
TC 14A	Traffic Control Flagging Operation	11/06/14
TC 14B	Reduced Speed Signing for Pilot Car Operation (Conventional Roads)	11/06/14
TC 15	Traffic Control 2 Lane/2 Way Seal Coat with Cover Material	01/01/12
TC 16	Traffic Control for Non-Durable Pavement Marking	01/01/12

State Projects With Full Size Plan Sheets

TC 17	Traffic Control Work Zone Guardrail Intermediate End Protection	10/31/13
TC 18	Blunt End Protection for W-Beam Guardrail and Concrete Barrier	08/30/12
TC 19	Construction Access Points for Speeds of 55 MPH and Greater	08/30/12

VIII. Equal Opportunity (State Projects)

Selection of Subcontractors, Service Providers, Procurement of Materials and Leasing of Equipment:

Do not discriminate on the grounds of race, color, religion, sex, national origin, age or disability in the selection and retention of subcontractors, including procurement of materials and leases of equipment.

Notify all potential subcontractors and suppliers of his/her EEO obligations under this contract.

Disadvantaged business enterprises (DBE), as defined in 49 CFR 23, have equal opportunity to compete for and perform subcontracts that the contractor enters into pursuant to this contract. Use best efforts to solicit bids from and to utilize DBE subcontractors or subcontractors with meaningful minority group and female representation among their employees. Obtain lists of DBE construction firms from SHA personnel.

Use best efforts to ensure subcontractor compliance with their EEO obligations.

Selection of Labor:

During the performance of this contract, do not discriminate against labor from any other State, possession, or territory of the United States.

Employment Practices:

During the performance of this contract, the Contractor agrees as follows:

> Do not discriminate against any employee or applicant for employment because of race, religion, sex, color, national origin, age, or disability. Take affirmative action to ensure that applicants are employed, and that employees are treated during employment without regard to their race, religion, sex, color, national origin, age, or disability. Such action includes, but is not limited to the following: employment, upgrading, demotion or transfer; recruitment or recruitment advertising; layoffs or termination; rates of pay or other forms of compensation; and selection for training, including apprenticeship. Agree to post in conspicuous places, available to employees and applicants for employment, notices to be provided by the State Department of Transportation setting forth the provisions of this nondiscrimination clause.
>
> In all solicitations or advertisements for employees state that all qualified applicants receive consideration for employment without regard to race, religion, sex, color, national origin, age, or disability.

Send to each labor union or representative of workers that the Contractor has a collective bargaining agreement or other contract or understanding, a notice to be provided by the State Department of Transportation advising the said labor union or worker' representative of the commitments under this section and post copies of the notice in conspicuous places available to employees and applicants for employment.

In the event of noncompliance with the nondiscrimination clauses of this contract or with any of the said rules, regulations or orders, this contract may be canceled, terminated, or suspended in whole or in part and the Contractor may be declared ineligible for further State contracts.

Include the provisions of this Section in every subcontract or purchase order so that such provision will be binding upon each Subcontractor or vendor. Take such action with respect to any subcontract or purchase order as the State Department of Transportation may direct as a means of enforcing such provisions including sanctions for noncompliance.

IX. Title VI Appendix A and E

Title VI of the Civil Rights Act of 1964 – Non – Discrimination Notice; Attachment A

NON-DISCRIMINATION NOTICE

In accordance with Title VI of the Civil Rights Act of 1964, 78 Stat. 252, 42 U.S.C 2000d to 2000d-4 and the Title 49, Code of Federal Regulations. The text below, in its entirety, is in all contracts entered into by UDOT. All of the text except the final section, entitled "Incorporation of Provisions," should be included in any contract entered into by any UDOT contractor.

During the performance of this contract, for itself, its assignees and successors in interest (hereinafter referred to as the "contractor") agrees as follows:

A. COMPLIANCE WITH TITLE VI OF THE CIVIL RIGHTS ACT OF 1964 FOR FEDERAL-AID CONTRACTS

1. **Compliance with Regulations:** The contractor shall comply with the Regulation relative to nondiscrimination in Federally-assisted programs of the Department of Transportation (hereinafter, "DOT") Title 49, Code of Federal Regulations, Part 21, as they may be amended from time to time, (hereinafter referred to as regulations), which are herein incorporated by reference and made a part of this contract.

2. **Nondiscrimination:** The Contractor, with regard to the work performed by it during the contract, shall not discriminate on the grounds of race, color, sex, age, disability, income status, or national origin in the selection and retention of subcontractors, including procurements of materials and leases of equipment. The contractor shall not participate either directly or indirectly in the discrimination prohibited by section 21.5 of the Regulations, including employment practices when the contract covers a program set forth in Appendix B of the Regulations.

3. **Solicitations for Subcontractors, Including Procurements of Materials and Equipment:** In all solicitations either by competitive bidding or negotiation made by the contractor for work to be performed under a subcontract, including procurements of materials or leases of equipment, each potential subcontractor or supplier shall be notified by the contractor of the contractor's obligations under this contract and the Regulations relative to nondiscrimination on the grounds of race, color, sex, age, disability, income status, or national origin.

4. **Information and Reports:** The contractor shall provide all information and reports required by the Regulations or directives issued pursuant thereto, and shall permit access to its books, records, accounts, other sources of information, and its facilities as may be determined by the (Recipient) or the (Name of Appropriate Administration) to be pertinent to ascertain compliance with such Regulations, orders and instructions. Where any information required of a contractor is in the exclusive possession of another who fails or refuses to furnish this information the contractor shall so certify to the (Recipient), or the (Name of Appropriate Administration) as appropriate, and shall set forth what efforts it has made to obtain the information.

5. **Sanctions for Noncompliance:** In the event of the contractor's noncompliance with the nondiscrimination provisions of this contract, the (Recipient) shall impose such contract sanctions as it or the (Name of Appropriate Administration) may determine to be appropriate, including, but not limited to:

   a. Withholding of payments to the contractor under the contract until the contractor complies, and/or

   b. Cancellation, termination or suspension of the contract, in whole or in part.

6. **Incorporation of Provisions:** The contractor shall include the provisions of paragraphs (1) through (6) in every subcontract, including procurements of materials and leases of equipment, unless exempt by the Regulations, or directives issued pursuant thereto.

The contractor shall take such action with respect to any subcontractor procurement as the (Recipient) or the (Name of Appropriate Administration) may direct as a means of enforcing such provisions including sanctions for noncompliance: Provided, however, that, in the event a contractor becomes involved in, or is threatened with litigation with a subcontractor or supplier as a result of such direction, the contractor may request the (Recipient) to enter into such litigation to protect the interests of the (Recipient), and, in addition, the contractor may request the United States to enter into such litigation to protect the interests of the United States.

Title VI of the Civil Rights Act of 1964 – Non – Discrimination Notice; Attachment E

During the performance of this contract, the contractor, for itself, its assignees, and successors in interest (hereinafter referred to as the "contractor") agrees to comply with the following non-discrimination statutes and authorities; including but not limited to:

Pertinent Non-Discrimination Authorities:

- Title Vl of the Civil Rights Act of 1964 (42 U.S.C. § 2000d *et seq.*, 78 stat. 252), (prohibits discrimination on the basis of race, color, national origin); and 49 CFR Part 21.
- The Uniform Relocation Assistance and Real Property Acquisition Policies Act of 1970, (42 U.S.C. § 4601), (prohibits unfair treatment of persons displaced or whose property has been acquired because of Federal or Federal-aid programs and projects);
- Federal-Aid Highway Act of 1973, (23 U.S.C. § 324 *et seq.),* (prohibits discrimination on the basis of sex);
- Section 504 of the Rehabilitation Act of 1973, (29 U.S.C. § 794 *et seq.),* as amended, (prohibits discrimination on the basis of disability); and 49 CFR Part 27;
- The Age Discrimination Act of 1975, as amended, (42 U.S.C. § 610 l*et seq.),* (prohibits discrimination on the basis of age);
- Airport and Airway Improvement Act of 1982, (49 USC § 471, Section 47123), as amended, (prohibits discrimination based on race, creed, color, national origin, or sex);
- The Civil Rights Restoration Act of 1987, (PL 100-209), (Broadened the scope, coverage and applicability of Title VI of the Civil Rights Act of 1964, The Age Discrimination Act of 1975 and Section 504 of the Rehabilitation Act of 1973, by expanding the definition of the terms "programs or activities" to include all of the programs or activities of the Federal-aid recipients, sub-recipients and contractors, whether suh programs or activities are Federally funded or not);
- Titles II and III of the Americans with Disabilities Act, which prohibit discrimination on the basis of disability in the operation of public entities, public and private transportation systems, places of public accommodation, and certain testing entities (42 U.S.C. §§ 12131 – 12189) as implemented by Department of Transportation regulations at 49 C.F.R. parts 37 and 38;
- The Federal Aviation Administration's Non-discrimination statute (49 U.S.C. §47123) (prohibits discrimination on the basis of race, color, national origin, and sex);
- Executive Order 12898, Federal Actions to Address Environmental Justice in Minority Populations and Low-lncome Populations, which ensures discrimination against minority populations by discouraging programs, policies, and activities with disproportionately high and adverse human health or environmental effects on minority and low-income populations;
- Executive Order 13166, Improving Access to Services for Persons with Limited English Proficiency, and resulting agency guidance, national origin discrimination includes discrimination because of limited English proficiency (LEP). To ensure compliance with Title VI, you must take reasonable steps to ensure that LEP persons have meaningful access to your programs (70 Fed. Reg. at 74087 to 74100);
- Title IX of the Education Amendments of 1972, as amended, which prohibits you from discriminating because of sex in education programs or activities (20 U.S.C. 1681 et seq).

X. Special Provisions and Supplemental Specifications

Supplemental Specification
2012 Standard Specification Book

SECTION 00120M

BIDDING REQUIREMENTS AND CONDITIONS

Delete Article 1.6, paragraph A and replace with the following:

A. Meet Department requirements for prequalification before submitting a proposal on all projects where the Department Engineer's advertised estimate is greater than or equal to $3 million.
   1. Prequalification information is due at least 10 calendar days before submitting a proposal on projects requiring prequalification.

Delete Article 1.15, paragraph A20 and replace with the following:

20. Unsatisfactory performance on previous or current contracts or serving probation for actions on another project.

Delete Article 1.15, paragraph B and replace with the following:

B. The bidder may appeal in writing to the Department Deputy Director according to Utah Code Section 63G-6-801 through 806, as amended if the Department refuses to accept a proposal for any of the foregoing reasons.

Delete Article 1.17 and replace with the following:

1.17 PROPOSAL DELIVERY

A. Electronically transmit the proposal before the time specified in the Notice to Contractors.

B. A manually submitted bid must include both a signed hard copy and electronic version. Electronic media device (CD/Flash Drive) must not be blank or unreadable and must contain the correct electronic bid items txt file in the indicated format.
   1. File format- Proj#_UDOTContractorID_bidopendate.txt
   2. The signed hard copy takes precedence over a manually delivered electronic version in the case of discrepancies or initialed changes to unit prices or DBE commitment.

Delete Article 1.18 and replace with the following:

1.18 WITHDRAWING OR REVISING PROPOSALS

A. A proposal may be withdrawn or revised before the time set for receiving proposals.

B. Provide the request for withdrawal to the Department with a telephone call followed by documented electronic communications including a company authorized signature and the UDOT Contractor ID before the time set for receiving proposals.

C. Revise and save bid proposal using the current version of the Department's Electronic Bid System. Transmit to Department authorized repository before the time set for receiving proposals.

Delete Article 1.20 and replace with the following:

1.20 SUSPENSION

A. A Contractor will be placed on suspension if its contractor ratings performed by the Department do not meet the minimum standard outlined in the contractor rating process for any Department or Department administered projects.

1. The Contractor will not be allowed to bid on Department or Department administered projects while on suspension.

Add Article 1.21, paragraph A14

14. Contractor ratings performed by the Department do not meet the minimum standard outlined in the contractor rating process.

Add Article 1.27:

1.27 PUBLIC OPENING OF PROPOSALS

A. Proposals are publicly opened at the time indicated in the invitation for bids.

Add Article 1.28:

1.28 CONTRACTOR LICENSING

A. Apply and conform to the laws of Utah relative to the licensing of contractors.
   1. A contractor's license is required before submitting a bid. Exception: A Contractor may submit a bid on a Federal-aid highway project if they can become licensed in Utah before beginning construction (notice to proceed).
   2. Failure to do so will result in forfeiture of award.

B. Obtain a commercial license to perform work in Utah.
   1. A license will be required to proceed with work.
   2. All license requirements and application to perform heavy highway construction in the state of Utah requires the applicable license for the category of work being performed.
      a. The Prime contractor is required to hold an E-100 classification title/code or the applicable license relating to their specific category of work being performed.
      b. A Sub-contractor is required to hold the applicable license relating to their specific category of work being performed. Licensing is governed by:

      Utah Department of Commerce
      Occupational/Professional Licensing
      P O Box 145741
      Salt Lake City, UT 84114-6741
      (801)530-6628

July 8, 2015

SPECIAL PROVISION

PROJECT # S-I15-1(113)5
PIN # 12780

SECTION 00221S

BIDDING CONTRACT TIME

Add Section 00221

PART 1 GENERAL

1.1 SECTION INCLUDES

A. Procedures for bidding contract time for the Price + Time bidding process.
   1. Includes incentive/disincentive for early/late completion of project milestones.

B. Description of time component pricing, and time related incentive or disincentive.
   1. Refer to Section 00515M for information regarding bidding time and determination of the low bidder.
   2. Time is a bid item that captures societal costs and is used for evaluation of the low bidder. Incentive/Disincentive is the only time related payment. Refer to this Section, article 1.7.

1.2 RELATED SECTIONS

A. Section 00515M: Contract Award And Execution

B. Section 00555: Prosecution and Progress

1.3 REFERENCES **Not Used**

1.4 DEFINITIONS **Not Used**

1.5 SUBMITTALS **Not Used**

1.6 TIME COMPONENT

A. Determine the bid price for the time component as follows.
   1. Measure contract time in calendar days.
   2. Determine the number of consecutive calendar days required between each start milestone and finish milestone in Table 1.
      a. Consider all requirements of the contract when determining the number of calendar days,
      b. Include the days of the start milestone and finish milestone in the number of calendar days.

B. The Department does not guarantee that any milestone can be completed in the minimum calendar days shown in Table 1.

C. Bidders are responsible to complete the milestones within the time bid and according to project requirements.

D. The Department will consider the bid non-responsive if the bidder:
   1. Does not submit a bid for the time component.
   2. Submits a time component bid for any awardable portion of the contract which is outside the minimum or maximum range.

E. Negative amounts are not permitted for time related bid items.

F. Time is bid in calendar days. Consider seasonal project specific weather conditions during bid preparation.

Table 1

Determination of Calendar Days						
A	**B**	**C**	**D**	**E**	**F**	**G**
TIME SEGMENT	**START MILESTONE**	**FINISH MILESTONE**	**TIME-RELATED COST-RATE**	**TIME-RELATED COST-RATE METHOD**	**MIN**	**MAX**
			Dollars per calendar day	User Cost or Liquidated Damages	Calendar days	Calendar days
1 (See notes 1)	To Be Determined by Contractor (See note 1)	Substantial Completion	$10,000	User Cost	250	340

NOTE 1: See Special Provision 00555M for Start and Completion Times.
NOTE 2: Contract time will be charged during waiting periods and cure times unless otherwise noted.

1.7 INCENTIVES/DISINCENTIVES RELATED TO "TIME"

A. Contract time related charges are determined by multiplying the number of calendar days accrued for each time segment by its corresponding time related cost rate and summing the products.

B. Document accrued time charges per time segment for the duration of the project.

C. Payments or deductions to the Contractor will be based on the difference between the time related bid amounts and the actual time charges assessed for the completed project.
   1. Payment for the incentive will be made in the project accounting system after substantial completion.
   2. Deduction for any milestone disincentive will be made on the first progress payment after the total number of calendar days bid for a milestone has passed without completion as defined in Table 1.

D. Incentive
   1. The Contractor is eligible for incentive when a milestone is achieved before the number of calendar days bid as determined by the Department.
   2. Payment is made at the rate shown in column D for the difference between the number of calendar days bid and the actual number of

calendar days used to achieve the milestone when Column E is defined as “User Cost.”

3. Payment is made at the rate shown in the schedule of liquidated damages in Section 00555 based on the original contract amount when Column E is defined as “Liquidated Damages.”
4. The maximum dollar amount eligible for incentive payment for all combined milestones is $50,000.

E. Disincentive

1. When the time related cost in Column E is defined as “User Cost.”
   a. The Contractor is assessed a disincentive when a milestone is not achieved within the number of calendar days bid as determined by the Department.
   b. Disincentive is assessed at the rate shown in column D for the difference between the number of calendar days bid and the actual number of calendar days used to achieve the milestone.
   c. There is no maximum dollar amount for disincentive charges.
   d. Liquidated damages are charged in addition to disincentive for the difference between the maximum calendar days and the actual number of days to achieve the milestone if milestone completion is not achieved prior to the maximum calendar days shown in Table 1. Refer to Section 00555.
2. When the time related cost in Column E is defined as “Liquidated Damages.”
   a. The Contractor is assessed disincentive at the rate shown in the schedule of liquidated damages in Section 00555 based on the original contract amount.
   b. Disincentive is assessed for the difference between the number of calendar days bid and the actual number of calendar days used to achieve the milestone.
   c. Disincentive applies until milestone completion or the maximum calendar days defined in Column G, whichever occurs first.

F. Liquidated Damages

1. Liquidated damages are assessed according to Section 00555 for the difference between the number of maximum calendar days bid from Column G and the actual number of calendar days used to achieve the milestone.

G. Timeline of Incentive, Disincentive, and Liquidated Damages

1. Refer to Figure 1

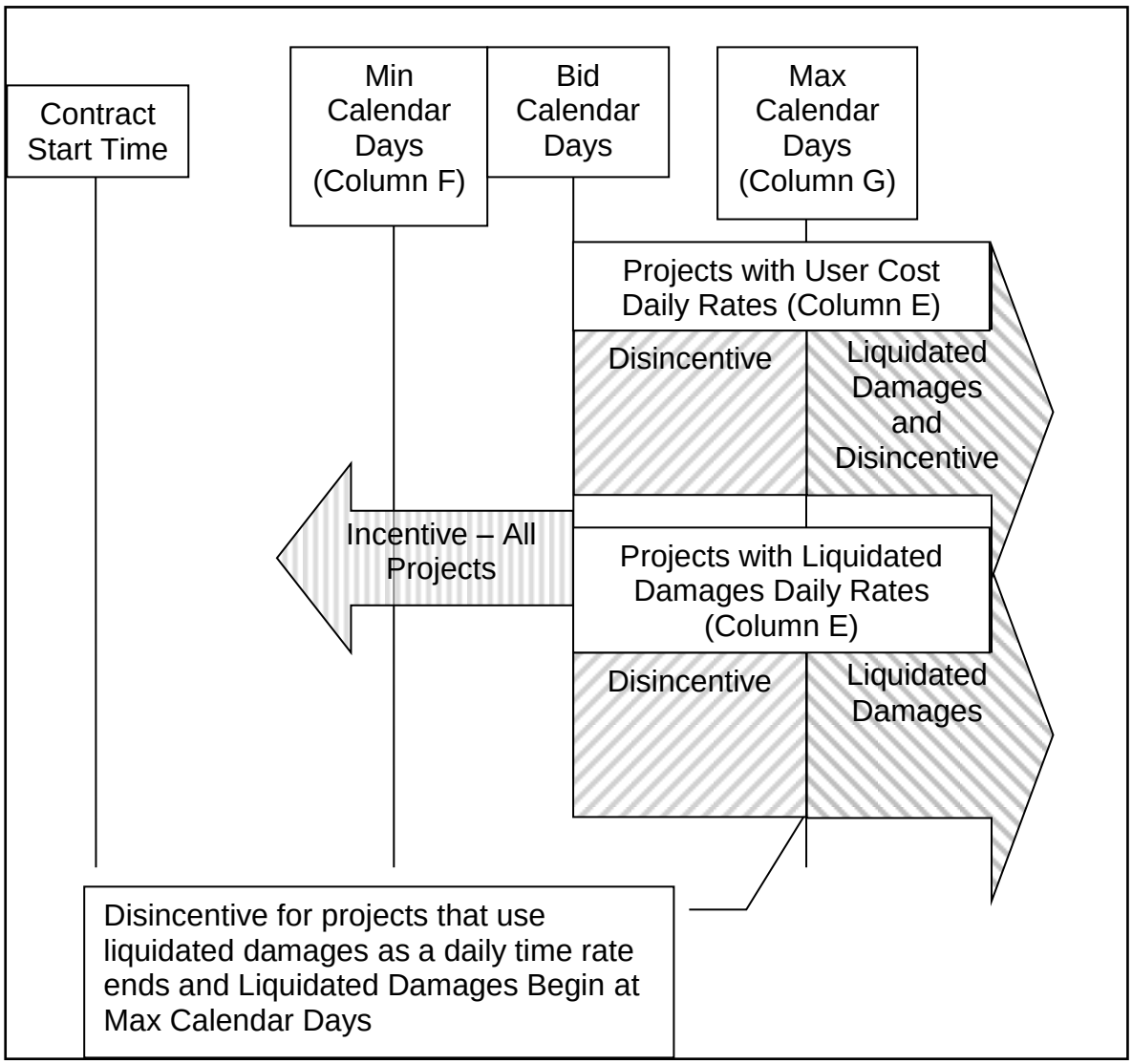

Figure 1 – Timeline of Incentive, Disincentive, and Liquidated Damages

PART 2 PRODUCTS Not Used

PART 3 EXECUTION Not Used

END OF SECTION

February 7, 2011

SPECIAL PROVISION

PROJECT # S-I15-1(113)5
PIN # 12780

SECTION 00222S

LANE RENTAL

Add Section 00222:

PART 1 GENERAL

1.1 SECTION INCLUDES

A. Procedures for bidding lane rental to minimize the duration of lane closures.
   1. Includes incentive/disincentive for closing lanes for a shorter duration than bid.

B. Description of lane rental pricing, and related incentive or disincentive.
   1. Refer to Section 00515M for information regarding lane rental and determination of low bidder.
   2. Incentive/Disincentive is the only lane rental related payment. Refer to this Section, article 1.8.

1.2 RELATED SECTIONS

A. Section 00515M: Award and Execution of Contracts

1.3 REFERENCES **Not Used**

1.4 DEFINITIONS

A. Lane Closure: Lane closure means denying any lane or any portion of a lane to traffic.
   1. Roadway portion of the project reduced to less than two 12 foot lanes and 2 foot shoulders will be considered a lane closure.
   2. Structure portion of the project reduced to less than two 11 foot lanes and 2 foot shoulders will be considered a lane closure.
      a. 1 foot shoulders will be allowed during Phase 2A of the bridge construction
   3. See Special Provision 00555M for additional information.

B. Lane Rental Time: Any continuous time period or fraction where the lane is closed. Includes traffic control setup and takedown.

C. Rental Rates: The amount, as shown in the Special Provisions that represents the time cost of interference and inconvenience to the road user for each lane closure.

1.5 SUBMITTALS

A. Refer to this Section, article 1.7, paragraph C1 for measurement related submittals.

1.6 PRICING THE BID ITEM "LANE RENTAL"

A. Determine the price for the bid item titled lane rental as follows:
   1. Determine the duration of lane rental time required to perform the work for each roadway, direction, closure, day of week, and time of day as indicated in the table below. Consider all requirements of the contract when determining the duration of lane rental time.
   2. Multiply the lane rental cost-rate in column G by the corresponding duration of closure time determined by the Contractor in column H, and record the product in column I.
   3. Repeat step 3 for all codes (column A) listed in the table.
   4. The sum of all lane rental costs in column I is the amount to bid for lane rental.

B. Due to bidding software limitations:
   1. The Department will consider the bid non-responsive if the bidder does not submit a bid for the lane rental item.
   2. A bid of $1.00 on the lane rental item indicates Contractor intent to bid no closures as described in this section.

C. Negative amounts are not permitted for the lane rental bid item.

D. Maintain the minimum number of lanes open as specified in the contract.

E. The lane rental item is included in the contract to allow bidders to account for the lane rental charges that will be made in accordance with this Section. The amount bid for this item should be based on the bidder's estimate of rental time and the amount charged for each rental time increment specified in this Section.

Table 1

Schedule of Lane Rental Cost								
A	B	C	D	E	F	G	H	I
CODE	**ROADWAY**	**DIRECTION**	**CLOSURE**	**START TIME**	**END TIME**	**RENTAL RATE**	**TOTAL DURATION**	**LANE RENTAL COST**
				Day	Day	Hour	Days	Dollars
1	I-15	Northbound	*Thru Lane**	*	*	$10,000		
2	I-15	Southbound	*Thru Lane**	*	*	$10,000		
						Total		

*****Lane closures will not be allowed during peak hours. Lane Rental will apply for closing lanes during the times specified in Section 00555M Table 1.

1.7 ASSESSMENT AND ACCRUAL OF LANE RENTAL CHARGES

A. General
   1. Lane rental charges will be assessed against the Contractor for all times when lanes are closed during times allowed for lane closures in the contract.
   2. Lane rental charges will be assessed for closure of lanes that pre-existed the contract and also those that are constructed under this contract.
   3. Planned or intentional closure of lanes outside of the hours allowed for lane rental is not permitted.

B. Conditions applicable during the performance of work to which lane rental applies
   1. Notify Engineer in writing 7 days in advance of lane rental closures.

C. Measurement
   1. Document lane rental on a form approved by the Engineer. Submit this documentation to the Engineer for approval. These documents will be the source documents for measurement of lane rental accrued and assessed.
   2. Submit documentation to the Engineer for approval every Monday showing lane rental usage for the previous week. As a minimum, include the following:
      a. Show every day of the week separately, and document every day, whether lane rental is used or not.
      b. For each lane rental location, document the following:
         1) Hour and minute the lane rental began.
         2) Hour and minute the lane rental ended.

3) Total duration of the lane closure in the time increment shown in Table 1 rounded up to the nearest whole time increment.
4) Affected lane.
5) Roadway centerline designation.
6) Closure starting station.
7) Closure ending station.
8) Lane rental rate.
9) Extended lane rental charge.

c. Measure lane rental by the time increment as defined in Table 1.
d. The cumulative lane rental accrued to date.
e. The balance of lane rental remaining, calculated as the difference between the lane rental bid and the lane rental accrued to date.

3. Determine the number of lane closures by counting the number of lane locations subject to closure as defined above.

D. Assessment of Lane Rental Charges
1. Lane rental charges are determined by multiplying the rental time by the appropriate rental charge for each closure specified in the contract and summing the products.

E. Accrual of Lane Rental Charges
1. A tally of cumulative lane rental charges is kept throughout the project, and subtracted each month from the original lump sum bid for this item.

1.8 INCENTIVE/DISINCENTIVES RELATED TO "LANE RENTAL"

A. Payments/deductions to the contractor are based on the difference between the lane rental bid amount and the actual lane rental charges assessed. Payment for the incentive, or a deduction for the disincentive, is made in the project accounting system.

B. Incentive
1. The Department will pay the contractor the difference if the actual lane rental charges accrued prior to substantial completion are less than the Lane Rental bid amount. The maximum payment will not exceed $20,000.
2. Payment is made to the Contractor by lump sum after substantial completion.

C. Disincentive

1. The Department will deduct the difference from moneys due the Contractor if the accrued lane rental charges exceed the amount of lane rental bid by the contractor.
2. These deductions will begin on the first progress payment when the accrued lane rental charges exceed the lane rental bid by the Contractor.

D. Liquidated damages are charged in addition to lane rental if lane rental occurs after the specified contract time.

PART 2 PRODUCTS Not Used

PART 3 EXECUTION Not Used

END OF SECTION

January 01, 2012

SPECIAL PROVISION

PROJECT # S-I15-1(113)5
PIN # 12780

SECTION 00250S

PREBID CONFERENCE

Add Section 00250:

PART 1 GENERAL

1.1 SECTION INCLUDES Not Used

1.2 RELATED SECTIONS Not Used

1.3 REFERENCES Not Used

1.4 DEFINITIONS Not Used

1.5 SUBMITTALS Not Used

1.6 SCHEDULING

A. A mandatory Pre-Bid Conference will be held at the following time and location:

Date: November 22, 2016 Time: 9:00 – 11:00 a.m.

Location: UDOT St George Office, 5340 W 200 South Hurricane, UT

Project ID: S-I15-1(113)5

B. Representatives of Construction and Design will be present to discuss details related to this project.

C. Bids submitted by Contractors who did not attend the pre-bid conference will be non-responsive.

PART 2 PRODUCTS Not Used

PART 3 EXECUTION Not Used

END OF SECTION

February 26, 2015

SPECIAL PROVISION

PROJECT # S-I15-1(113)5
PIN # 12780

SECTION 00515M

CONTRACT AWARD AND EXECUTION

Delete Article 1.6 and replace with the following:

1.6 PROPOSAL CONSIDERATION

A. This project uses a price + time or price + time + lane rental bidding process. These processes provide:
   1. For the determination of the low bidder based on the price of construction plus the costs associated with contract time and lane rental.
   2. An incentive/disincentive for completion of project time-related milestones based on durations established by Contractor bid as applicable.
   3. An incentive/disincentive for minimizing duration of lane and shoulder closures based on durations established by Contractor bid as applicable.

B. The Department publicly opens properly executed proposals using the current version of the Electronic Bid System (EBS) to compare bids on the basis of the summation of the products of the quantities and the unit bid prices.
   1. The Department makes the results of the comparisons available to the public.
   2. The unit bid prices govern if a discrepancy exists between unit bid prices and extensions.

C. The Department reserves the right to reject any or all proposals, waive technicalities, or advertise for new proposals.

D. The bidder can request withdrawal of a bid after bid opening by:
   1. Submitting to the Director for Construction and Materials a notarized affidavit within 24 hours after bid opening declaring a clerical or mathematical error in bid preparation.
   2. Submitting accompanying declaration with original work sheets used in bid preparation.
   3. Describing specific errors in detail.

4. Verifying that error has a significant monetary effect in the amount of 3 percent of the bid or greater.

E. The bidder may not request bid withdrawal for judgmental errors.

Supplemental Specification
2012 Standard Specification Book

SECTION 00515M

CONTRACT AWARD AND EXECUTION

Delete Article 1.11, paragraph A and replace with the following:

A. The awarded Contractor must return the signed contracts, properly executed contract bonds, National Safety Rating Scores, and all required insurances to the Department within 20 calendar days after notice of award.
   1. The bidder can withdraw the proposal without penalty if the Department does not execute the contract within 30 calendar days after receiving requisite signed contracts, bonds, and insurances.
   2. The contract is not considered in effect until executed by all parties.

Delete Article 1.11, paragraph B and replace with the following:

B. Qualified Health Benefit Plan
   The Department will issue a Notice to Proceed after the Contractor demonstrates that an offer of qualified health insurance coverage has been or will be maintained for the employees and their dependents for the duration of any contract entered between the Department and the Contractor.
   1. Provide certification of equivalency to a "qualified health insurance" plan as required by Utah Code 72-6-107.5.
   2. Demonstrate compliance of this requirement before the Notice of Proceed or approval to sublet work. Refer to http://www.udot.utah.gov/go/standardsreferences for guidance on this process for Qualified Health Insurance Coverage.
   3. Failure to demonstrate compliance of this requirement may result in cancellation of the contract.
   4. Provide two statements to "demonstrate" compliance. Statements need to be signed originals and on company letterhead. Separate letters for each subsidiary, contracting with Department, are required.
      a. Provide an original signed statement from the Contractor stating that they will maintain an offer of Qualified Health Insurance coverage as required by Utah Code 72-6-107.5 for the duration of any contract between Contractor and UDOT.

b. Provide a written statement of actuarial equivalency from:
   1) The Utah Insurance Department;
   2) An actuary selected by the contractor or the contractor's insurer; or
   3) An underwriter who is responsible for developing the employer group's premium rates.

August 8, 2016

SPECIAL PROVISION

PROJECT # S-I15-1(113)5
PIN # 12780

SECTION 00555M

PROSECUTION AND PROGRESS

Delete Article 1.7 and replace with the following:

1.7 NOTICE TO PROCEED

A. Proceed with work after receipt of written notice from the Department.

B. Notify the Engineer at least two weeks before beginning work.

Delete Article 1.11 Paragraph A and replace with the following:

A. Travel Restrictions:
   1. Do not restrict traffic lanes if no work is taking place. Only restrict traffic lanes if necessary for work.
   2. Maintain at least two lanes of unrestricted traffic in each direction of I-15 mainline at all times except when Lane Rental provisions apply.
      a. No lane closures will be allowed on I-15, except as noted in Table 1. Refer to Special Provision 00222S for Lane Rental.
      b. During periods of lane closures, maintain at least one lane of unrestricted traffic in each direction of I-15 at all times.
      c. Maintain minimum 12-ft traffic lanes and 2-ft shoulders on the roadway portion of the project.
      d. Maintain minimum 11-ft traffic lanes and 2-ft shoulders on the bridge structure portion of the project.
         1) 1-ft minimum shoulders will be allowed during Phase 2A of the bridge construction
         2) Refer to bridge structure F-875 plans for additional information
   3. On all entrance and exit ramps maintain a minimum of 12-foot lane and 2-foot shoulders
   4. The Contractor is responsible for ensuring that the traffic control and the number of lanes provided for the traveling public are returned to the required lanes of traffic operation prior to the start of the next period. If not, a disincentive in the amount of $2,000 for the first 15 minute period, and $500 per 15 minute period thereafter

will be assessed for non-compliance with the time and lane requirements.

5. Provide traffic control to safely allow construction vehicles to enter and leave the work zone.
6. No mainline traffic is permitted on rotomilled surfaces.

TABLE 1: MINIMUM TRAVEL LANES OPEN

<table>
<tr><th colspan="9">I-15; Brigham Road to Dixie Drive
Minimum Travel Lanes Open</th></tr>
<tr><th></th><th colspan="2">Monday-Thursday</th><th colspan="2">Friday</th><th colspan="2">Saturday</th><th colspan="2">Sunday</th></tr>
<tr><th>Time</th><th>NB</th><th>SB</th><th>NB</th><th>SB</th><th>NB</th><th>SB</th><th>NB</th><th>SB</th></tr>
<tr><td>12:00 AM</td><td rowspan="6">1</td><td rowspan="8">1</td><td rowspan="8">1</td><td rowspan="8">1</td><td rowspan="8">1</td><td rowspan="8">1</td><td rowspan="8">1</td><td rowspan="8">1</td></tr>
<tr><td>1:00 AM</td></tr>
<tr><td>2:00 AM</td></tr>
<tr><td>3:00 AM</td></tr>
<tr><td>4:00 AM</td></tr>
<tr><td>5:00 AM</td></tr>
<tr><td>6:00 AM</td><td rowspan="2">1 (Lane Rental*)</td><td rowspan="2">1 (Lane Rental*)</td></tr>
<tr><td>7:00 AM</td><td rowspan="2">1 (Lane Rental*)</td><td rowspan="2">1 (Lane Rental*)</td></tr>
<tr><td>8:00 AM</td><td rowspan="13">All</td><td rowspan="2">1 (Lane Rental*)</td><td rowspan="2">1 (Lane Rental*)</td><td rowspan="13">All</td></tr>
<tr><td>9:00 AM</td><td rowspan="11">All</td><td rowspan="11">All</td><td rowspan="11">All</td><td rowspan="11">All</td></tr>
<tr><td>10:00 AM</td><td rowspan="9">All</td></tr>
<tr><td>11:00 AM</td></tr>
<tr><td>12:00 PM</td></tr>
<tr><td>1:00 PM</td></tr>
<tr><td>2:00 PM</td></tr>
<tr><td>3:00 PM</td></tr>
<tr><td>4:00 PM</td></tr>
<tr><td>5:00 PM</td></tr>
<tr><td>6:00 PM</td><td rowspan="2">1 (Lane Rental*)</td></tr>
<tr><td>7:00 PM</td><td rowspan="2">1 (Lane Rental*)</td><td rowspan="2">1 (Lane Rental*)</td><td rowspan="2">1 (Lane Rental*)</td><td rowspan="2">1 (Lane Rental*)</td><td rowspan="2">1 (Lane Rental*)</td></tr>
<tr><td>8:00 PM</td><td rowspan="2">1 (Lane Rental*)</td><td rowspan="3">1</td><td rowspan="2">1 (Lane Rental*)</td><td rowspan="2">1 (Lane Rental*)</td></tr>
<tr><td>9:00 PM</td><td rowspan="3">1</td><td rowspan="3">1</td><td rowspan="3">1</td><td rowspan="3">1</td></tr>
<tr><td>10:00 PM</td><td rowspan="2">1</td><td rowspan="2">1</td></tr>
<tr><td>11:00 PM</td></tr>
</table>

* Lane Rental will apply during this time period. See Special Provision 00222S for additional information

Delete Paragraph B.1, Article 1.11, "LIMITATION OF OPERATIONS" and replace with the following:

1. Do not perform any work without written approval except for repairing or servicing equipment, protecting work, maintaining or

curing concrete, and maintaining traffic on Category II holidays as defined in Section 00570 and as listed below:

a. April 14, 2017 11:59 am to April 16th, 2017 11:59 pm (Easter)
b. May 5th, 2017 11:59 am to May 6th, 2017 11:59 pm (Iron Man Competition)
c. May 26th, 2017 11:59 am to May 29th, 2017 11:59 pm (Memorial Day)
d. June 30th, 2017 11:59 am to July 4th, 2017 11:59 pm (Independence Day)
e. July 21st, 2017 11:59 am to July 24th, 2017 11:59 pm (Pioneer Day)
f. September 1nd, 2017 11:59 am to September 4th, 2017 11:59 pm (Labor Day)
g. September 29th, 2017 11:59 am to September 30, 2017 11:59 pm (St George Marathon).
h. November 22rd, 2017 11:59 am to November 26th, 2017 11:59 pm (Thanksgiving)
i. December 23rd, 2017 11:59 am to December 25th, 2017 11:59 pm (Christmas)

Add the following to paragraph C, Article 1.11, "LIMITATION OF OPERATIONS":

4. Provide five calendar day's notice to St George City prior to starting night work.

Add the following to Article 1.11, "LIMITATION OF OPERATIONS":

D. Maintain the existing trail under the Virgin River Bridge structures during construction.
   1. The trail may be closed during demolition, any overhead work, and installation of jet grouted columns. Additional closures may be approved by the Engineer.
   2. Place trail closure signs alerting the public to the trail closure a minimum of 5 days in advance of trail closure(s). Place temporary fencing across the trail during closure(s). Maintain signs and fencing throughout the closure(s).
   3. Coordinate with and obtain approval from the Engineer and St George City for trail closure dates, durations, and signing prior to closure(s).
   4. Do not restrict the trail on the following dates:
      a. Saturday, March 4, 2017 (Lake to Lake Relay)
      b. Saturday, April 22, 2017 (Southern Utah Half Marathon)
      c. Saturday, October 12, 2017 (Senior Games Half Marathon)

5. Repair and/or replace any damage to the trail as directed by the Engineer, at no additional cost to the Department. See the project plans for the horizontal and vertical alignment of the existing trail.

E. Maintain the existing trail along the east side of I-15, within the project limits. Repair and/or replace any damage to the trail as directed by the Engineer, at no additional cost to the Department.

F. Staging areas and/or construction borrow areas occurring outside the roadway ROW, including all public or private land, require appropriate coordination and permitting with the landowner by the Contractor.

G. Excess roadway excavation material that is not used for project embankment may be wasted on the roadway side slopes, within the project limits and within the roadway ROW, as approved by the Engineer. Meet the following criteria for all material placed within the ROW:

1. Do not place material steeper than 2:1.
2. Do not impact existing drainage channels nor project drainage channels (see project plans).
3. Protect existing vegetation as shown in the project Drainage and Erosion Control plans, or as approved by the Engineer.
4. Grade material to facilitate drainage, as directed by the Engineer.
5. Do not grade material to create ponding in any areas.
6. Grade material to meet project clear zone requirements.
7. Include any and all costs associated with excavation, hauling, grading, placement of the material, steep slope erosion protection, and seeding in the Roadway Excavation pay item.

Placement of any material outside the roadway ROW, including all public or private land, requires appropriate coordination and permitting with the landowner by the Contractor. Material not wasted on site must be hauled off and disposed of at no additional cost to the Department.

H. Haul off and dispose of, at no additional cost to the Department, excess river excavation material that is not re-used as part of the river backfilling, grading and/or creating voidless riprap.

I. Pick up and remove waste daily, including excess asphalt and rotomill tailings.

J. Apply Preformed Thermoplastic Pavement Messages and/or Tape after paving operations and as specified by the manufacturer.

K. Allow a minimum 30 days, or as directed by the Engineer, before applying second application of pavement marking paint

L. Contract time will be charged during paint application waiting period and all other waiting periods and cure times unless otherwise noted.

M. Contract time will not be charged during the seven (7) calendar days required for the installation of variable message boards prior to beginning any construction activities.

N. Contract time will not be charged between end of construction and beginning of seeding activities as long as all other construction activities are complete. Contract time will be charged for seeding activities.

O. Cultural and Fossil – Discovery of cultural and paleontological items (non-renewable resources) may be possible during construction activities. Refer to all standard procedures listed in Standard Specification 01355, more specifically Articles 3.7 and 3.8 to address such discoveries and Contractor activities requiring environmental clearances.

P. Provide the UDOT Region Four Safety Loss/Incident Manager, with two (2) weeks' notice of beginning and ending of construction and the beginning of any lane restrictions. Provide one (1) week's notice of ending any lane restrictions.

Brian Quarnberg
Email: bquarnberg@utah.gov
Cell: (435) 979-8468

Q. Provide the Region Four Communications Manager, with two (2) weeks' notice of beginning and ending construction.

Kevin Kitchen
Email: kevin@utah.gov
Cell: (435) 979-4551
FAX: (435) 896-6458

R. Design consultant will provide a preliminary SWPPP package and SPCC at the preconstruction meeting. The Contractor is required to finalize and maintain these documents and to file a Notice of Intent (NOI) with the Utah Department of Water Quality, which will serve as the application for the UPDES permit. Submit a Notice of Termination (NOT) at the end of construction in similar manner as the NOI under the review and approval of the Engineer. The NOI and NOT forms and instructions can be obtained through the State Division of Water Quality's website: http://waterquality.utah.gov/updes/stormwater.htm.

S. Comply with the conditions set forth in the 404 permit(s) and Stream Alteration permit(s) included with this special provision. See Appendices A and B at the end of this section.

T. Rotomill tailings become property of the Contractor and are to be removed and disposed of by the Contractor as per UDOT specifications. No rotomill tailings are allowed to be placed on the job site, other than those specifically outlined in the plans and specifications.

U. Bridge Construction Phasing: Submit bridge construction phasing plan to the Engineer and obtain approval prior to start of bridge construction.

V. Utilities

1. Utility relocation work contained within the project is subject to inspection by an authorized agent of the utility owner.
2. See plan sheet UTDT-01 for third party contact information.
3. Protect all utilities during construction.
4. Maintain a minimum of 12-inches of cover over all utilities during construction unless otherwise noted. Coordinate with utility owner before running heavy equipment over high pressure gas lines, tile duct runs and water lines.
5. Provide utility companies (City of St. George Energy Services, Dixie Power) a minimum three (3) weeks' notice prior to the scheduled time their utilities will require relocation. The utility companies will begin their work when the site of their relocation has been prepared by contractor – including exposing existing conduit and/or the placement of new conduit. Each utility company will complete their specific work effort within two weeks after beginning their work at the project site. Coordinate with the following representatives:

   City of St. George Energy Services
   Barbara Berrett
   Email: Barbara.berrett@sgcity.org
   Office: (435)627-4896

   Dixie Power
   Chad Reynolds
   Email: chadr@dixiepower.com
   Office: (435)673-3297

6. Hold a meeting with the Questar Gas, City of St. George Water Services, and Dixie Power inspectors before any utility work begins. Provide 48 hours prior notice before any work occurs in the proximity of their facilities. Coordinate work and inspections with their inspectors.

W. Maintain operation of the existing drip irrigation system providing water to trees and landscaping adjacent to Pioneer Road during project construction and provide a properly functioning system once the project is complete. Relocate existing irrigation mainlines, valve control wires, control valves and boxes, etc. impacted by the project to make the system complete. Obtain approval of the irrigation system's re-establishment from St. George City's Representative. Do not exceed a 3-day irrigation system downtime during construction. Payment of this work is incidental Mobilization. Coordinate with the following representative:

St. George Parks Division
Shane Moore
Email: shane.moore@sgcity.org
Office: (435)627-4530

X. A Questar Gas representative who specializes in high pressure gas lines is invited by the Contractor to the Preconstruction meeting and to subsequent weekly construction partnering meetings so he is kept apprised of the progress of the project as it may impact the gas line. A test program will be performed on site for jet grouted columns, see Special Provision 02467S, Part 3.1 Test Program. A representative of Questar must be on site during execution of the test program. Questar will evaluate the effect of the jet grouting procedure on the surrounding soil to determine if there will be any impact of the procedure to the high pressure gas line. The outside of the soil column will not be any closer than 3 feet from the outside of the steel gas line. This representative will monitor all operations around the 8" high pressure steel gas line in vicinity of the project. Coordinate with the following representative:

Questar Gas
Jerry Jones
Email: Jerry.Jones@Questar.com
Cell: (435)680-9898

Y. Dixie Power will remove and relocate off-ramp lighting system per LT sheets. The Contractor is to coordinate with Dixie Power to assure that lighting system has been relocated before Wall R-801 begins construction. Coordinate with the following representative:

Dixie Power
Chad Reynolds
Email: chadr@dixiepower.com
Phone: (435)673-3297

Z. Contractor will coordinate with Bloomington Country Club golf course to protect the 48-inch irrigation line that crosses I-15 between STA. 126+50 and 128+00. The representative to coordinate with is:

Bloomington Country Club
Larry Williams
Phone: (435)319-5028

AA. Protect the 10-inch irrigation line in place on the east side of I-15 behind Wall R-800. The irrigation line may be sitting on an old concrete ditch as bedding for the line in this area. Contractor will protect the line and ditch in place if encountered when excavating east of Wall R-800. Coordinate with St. George City Water Services for location and disposition of the irrigation line and concrete ditch. The representative to coordinate with is:

St. George Water Services
Scott Taylor
Email: scott.taylor@sgcity.org
Phone: (435)627-4850

AB. St. George City Parks Division will remove and relocate a 2" irrigation water line per UT-01 to UT-03 sheets. The Contractor is to coordinate with the Parks Division to assure that the irrigation system has been relocated before grading in right shoulder between mainline sta. 119+00 and sta.137+50 commences. Coordinate with the following representative:

St. George Parks Division
Shane Moore
Email: shane.moore@sgcity.org
Office: (435)627-4530

AC. Existing asbestos pipe may be encountered within the project limits. Contact St George City for the removal and disposal of any asbestos pipe encountered.

AD. See Table 2 below for Environmental Mitigation Measures during construction from the Environmental Assessment:

Table 2: Environmental Mitigation Measures

Resource	Mitigation and Environmental Requirements
Air Quality	Requirements outlined in Standard Specification 01572 titled "Dust Control and Watering" will be followed.
Invasive Species	Supplemental Specification 02924S titled "Invasive Weed Control" will be included in the contract documents and outlines the following BMP's that will be incorporated: 1. Cleaning all earth-moving equipment entering the project area. 2. Treating existing noxious weeds ten days before starting earthwork operations. 3. Controlling invasive weeds using pre-emergent, selective, and non-selective herbicides, as appropriate. Broadcast applications of herbicides are prohibited within the Virgin River's 100-year floodplain; if necessary, apply spot treatments by hand using herbicides approved for aquatic habitats by the EPA in order to treat noxious weeds within the floodplain.
Floodplains	Comply with the floodplain development

	permit (Appendix C at the end of this section).
Wetlands	Comply with the Section 404 Permit and Stream Alteration Permit (Appendices A and B at the end of this section).
Water Quality	Finalize and maintain the storm water pollution prevention plan (SWPPP) started by UDOT's design consultant and obtain a UPDES Permit from the Division of Water Quality.
Water Quality	Finalize and maintain the spill prevention, control, and countermeasures (SPCC) plan started by UDOT's design consultant. Include in this plan identification of riparian zones and drainages and describe measures to ensure protection. Address the following issues in the SPCC and SWPPP: A. Refueling construction equipment near riparian zones and water bodies, include washing equipment. No refueling within 100 feet of riparian zones and water bodies. Identify steps to control, contain, and clean up any spill that occurs. B. Ensure that equipment operating near aquatic habitat (riparian zones) contains a hazardous materials response kit to prevent impacts to aquatic habitat. Use equipment mats to prevent leakages from entering the river.
Water Quality	Store concrete, grout, cement mortar, and solid and source site materials in the staging area. Provide watertight tanks or barrels for the storage and disposal of chemical pollutants, including those that are produced as byproducts of the construction activities, such as drained lubricating or transmission fluids, grease, soaps, or concrete. Upon completion of construction work, these containers will be removed. Fuel machinery off site or in a confined, designated area to prevent spillage into the Virgin River.
Water Quality	A hazardous materials spill kit will be kept on site during construction that is appropriate for the solvents involved in operation and maintenance of vehicles and machinery used during the project.

	Locate sanitary facilities, such as chemical toilets, a sufficient distance from the Virgin River to prevent water contamination. At the completion of construction activities, remove facilities without causing pollution to the river or soils.
Water Quality	Use netting within the Virgin River's 100 year floodplain to ensure that removed bridge sections and associated debris do not enter surface waters below. Alternatively, floating containment booms could be positioned under the bridge to prevent material from entering the water. Remove any collected material from the containment booms on a daily basis.
Water Quality	Secure cast-in-place concrete for new bridge infrastructure not contained within a dewatered cofferdam using a watertight "diaphragm" or plate below the structure. Use tarping or other appropriate measures to prevent the spill of wet concrete into waters below. Provide concrete for overwater infrastructure by one of the following two methods: (1) through a pipe attached to a pumper truck positioned near the river channel or (2) from buckets lifted by crane from the river channel. Either method will require the use of spill prevention and control measures, including tarps under buckets, positioning the pumper truck a sufficient distance from the river channel, and ensuring a tight connection of the delivery pipe to the pumper truck.
Threatened and Endangered Species	Project actions will not occur in the Virgin River's active channel between April 1 and August 15. During this timeframe, access and limited project actions could occur outside of the active channel within the Virgin River's 100-year floodplain. Limited actions could include construction of bridge supports, beam placement, and other activities as approved by the Engineer. Above-ground structural work on the bridges is not limited. See project plans for 100-year floodplain.
Threatened and Endangered Species	Obtain approval from UDOT for stockpile areas prior to construction. Stockpile areas will be outside of the Virgin River's 100-year floodplain and avoid all riparian vegetation.
Threatened and Endangered Species	Dewatering and Fish Clearances: Conduct all in-river work under dewatered conditions.

	Prior to in-river construction, contact a USFWS Service approved or UDWR biologist to clear the stream reach within the area of construction of any Virgin River Chub and Woundfin, in a manner subject to USFWS approval. Physical dewatering of the in-river work area will be accomplished via coffer dams (small, temporary structures to laterally move the river around the work area) and gravity drains. Filter all removed/returned water for sediment. Store water in a settling basin within a previously disturbed area (exact location to be determined) to allow suspended sediment to fall before the water is returned to the river. After the initial dewatering effort, close off the dewatered areas from the river to prevent native fish access. Follow BMPs and the SWPPP to preclude inadvertent introduction of sediment to the stream. After construction, remove cofferdams incrementally to minimize pulses of sediment downstream.
Threatened and Endangered Species	No construction activities within the Virgin River's 100-year floodplain are allowed to occur during active flooding events (when the water level rises more than 6 inches above the normal wetted channel). If construction materials are displaced by high flow, contact UDOT's Engineer immediately. UDOT is required to coordinate with USFWS or the Virgin River Program to determine the least intrusive retrieval methods to recover the displaced materials.
Threatened and Endangered Species	Designate construction work limits within the Virgin River's 100-year floodplain with temporary staking or flagging, as approved by the Engineer. Confine construction activities and equipment to these designated construction work areas.
Threatened and Endangered Species	Use large equipment in floodplains only when necessary.
Threatened and Endangered Species	Locate staging areas outside of the Virgin River's 100-year floodplain and in previously disturbed sites.

Delete Article 1.14, paragraph A and replace with the following:

A. Contract time begins on first day of work or January 9, 2017, whichever occurs first.

B. All work requiring travel restrictions must be completed by November 22, 2017, except for final application of striping, as approved by the Engineer.
   1. Obtain Substantial Completion by December 23, 2017, or as approved by the Engineer.
   2. Disincentives will be assessed for failure to comply.

Section 00555M

PROJECT # S-I15-1(113)5

PIN # 12780

APPENDIX A

404 Permit

DEPARTMENT OF THE ARMY
U.S. ARMY CORPS OF ENGINEERS, SACRAMENTO DISTRICT
1325 J STREET
SACRAMENTO CA 95814-2922

November 8, 2016

Regulatory Division (SPK-2016-00746)

Utah Department of Transportation
Attn: Mr. Larry Johnson
210 West 800 South
Richfield, Utah 84701

Dear Mr. Johnson:

We are responding to your September 23, 2016, request for a Department of the Army permit for the I-15; Brigham Road to Dixie Drive - UDOT Project No. S-I15-1 (113)5; Bridge Replacement Project. The approximately 1.28-acre project site is located at Latitude 37.0697°, Longitude -113.5844°, Saint George, Washington County, Utah (enclosure 1).

Based on the information you provided to this office, the I-15; Brigham Road to Dixie Drive Bridge Replacement project involves the replacement of existing bridge structures on north and southbound I-15 with two new four lane structures spanning the Virgin River and the addition of one north and one southbound auxiliary lane on I-15 between the Brigham Road and Dixie Drive interchange, in accordance with the enclosed (undated) plans titled *I-15; Brigham Road to Dixie Drive Virgin River OWHM Impact Footprint* and the (undated) plans titled *River Channel Location Post Construction* (enclosures 2 & 3). The specific activities that require a permit are the addition of two new bridge piers, the removal of three existing bridge piers, the placement of riprap below the streambed and temporary impacts below the ordinary high water mark of a jurisdictional stream. These activities will result in permanent impacts of approximately 0.005 acre and temporary impacts of approximately 1.71 acres to the Virgin River, a perennial stream.

We have determined activities in waters of the U.S. associated with the project are authorized by Nationwide Permit Number (NWP) 14 Linear Transportation Projects.

You must comply with all terms and conditions of the NWP, applicable Utah regional conditions, and project-specific special conditions. Information about the NWP and regional conditions are available on our website at *www.spk.usace.army.mil/Missions/Regulatory/Permitting/NationwidePermits.aspx*. In addition, your work must comply with the following special conditions:

1. You shall notify the Corps of the start and completion dates for each phase of the authorized work within 30 calendar days prior to initiation of construction activities within waters of the U.S. and 30 calendar days following completion of construction activities.

2. You shall comply with all terms and conditions of the State of Utah, Section 401 Water Quality Certification. A copy of the 401 Water Quality Certification is available on our website at: http://www.spk.usace.army.mil/Portals/12/documents/regulatory/nwp/2012_nwps/. A hard copy will be mailed to you at your request.

3. This Corps permit does not authorize you to take an endangered species, in particular Virgin River chub (*Gila seminude*), woundfin (*Plagopterus argentissmus*), desert tortoise (*Gopherus agassizii*), Holmgren milk-vetch (*Atragalus holmgreniorum*), dwarf bear-poppy (*Arctomecon humulis*), and southwestern willow flycatcher (*Empidonax traillii extimus*) or designated critical habitat. In order to legally take a listed species, you must have separate authorization under the Endangered Species Act (e.g., an Endangered Species Act Section 10 permit, or a Biological Opinion under Endangered Species Act Section 7, with "incidental take" provisions with which you must comply). The enclosed Fish and Wildlife Service Biological Opinion (Number 2010-F-0188, dated December 17, 2012) contains mandatory terms and conditions to implement the reasonable and prudent measures that are associated with "incidental take". Your authorization under this Corps permit is conditional upon your compliance with the mandatory terms and conditions that are within the Corps' control and responsibility and are associated with "incidental take" of the attached Biological Opinion, which terms and conditions are incorporated by reference in this permit. Failure to comply with the terms and conditions, where a take of the listed species occurs, would constitute an unauthorized take, and would also constitute non-compliance with your Corps permit. The U.S. Fish and Wildlife Service is the appropriate authority to determine compliance with the terms and conditions of its Biological Opinion and with the Endangered Species Act.

Within 30 days after completion of the authorized work, you must sign the enclosed Compliance Certification and return it to this office.

This verification is valid until March 18, 2017, when the existing NWPs are scheduled to be modified, reissued, or revoked. Furthermore, if you commence or are under contract to commence this activity before the date the NWP is modified, reissued, or revoked, you will have 12 months from the date of the modification, reissuance or revocation to complete the activity under the present terms and conditions. Failure to comply with the general and regional conditions of this NWP, or the project-specific special conditions of this authorization, may result in the suspension or revocation of your authorization.

We would appreciate your feedback on this permit action including your interaction with our staff. At your earliest convenience, please tell us how we are doing by completing the Corps' Regulatory Program national customer service survey found on our website at *www.spk.usace.army.mil/Missions/Regulatory.aspx.*

Please refer to identification number SPK-2016-00746 in any correspondence concerning this project. If you have any questions, please contact Craig Brown at Saint George Regulatory Office, 196 East Tabernacle Street, Suite 30, Saint George, Utah

84770-3474, by email at *Craig.J.Brown@usace.army.mil*, or telephone at 435-986-3979.

Sincerely,

Craig Brown
Senior Project Manager, Utah-Nevada Branch
Regulatory Division

Enclosures

cc:

Consultant: Ryan Pitts (ryanp@horrocks.com)
FWS: Larry Crist (larry_crist@fws.gov)
FHWA: Bryan Dillon (bryan.dillon@dot.gov)

COMPLIANCE CERTIFICATION

Permit File Name: I-15; Brigham Road to Dixie Drive - UDOT Project No. S-I15-1 (113)5; Bridge Replacement

Action ID: SPK-2016-00746

Nationwide Permit Number: NWP 14 Linear Transportation Projects.

Permittee: Utah Department of Transportation
Attn: Mr. Larry Johnson
210 West 800 South
Richfield, Utah 84701

County: Washington

Date of Verification: November 8, 2016

Within 30 days after completion of the activity authorized by this permit, sign this certification and return it to the following address:

U.S. Army Corps of Engineers
Sacramento District
Saint George Regulatory Office
196 E Tabernacle Street, Suite 30
Saint George, Utah 84770-3474
DLL-CESPK-RD-Compliance@usace.army.mil

Please note that your permitted activity is subject to a compliance inspection by a U.S. Army Corps of Engineers representative. If you fail to comply with the terms and conditions of the permit your authorization may be suspended, modified, or revoked. If you have any questions about this certification, please contact the U.S. Army Corps of Engineers.

* * * * * * * * *

I hereby certify that the work authorized by the above-referenced permit, including all the required mitigation, was completed in accordance with the terms and conditions of the permit verification.

_____ _____
Permittee Signature Date

enclosure 1

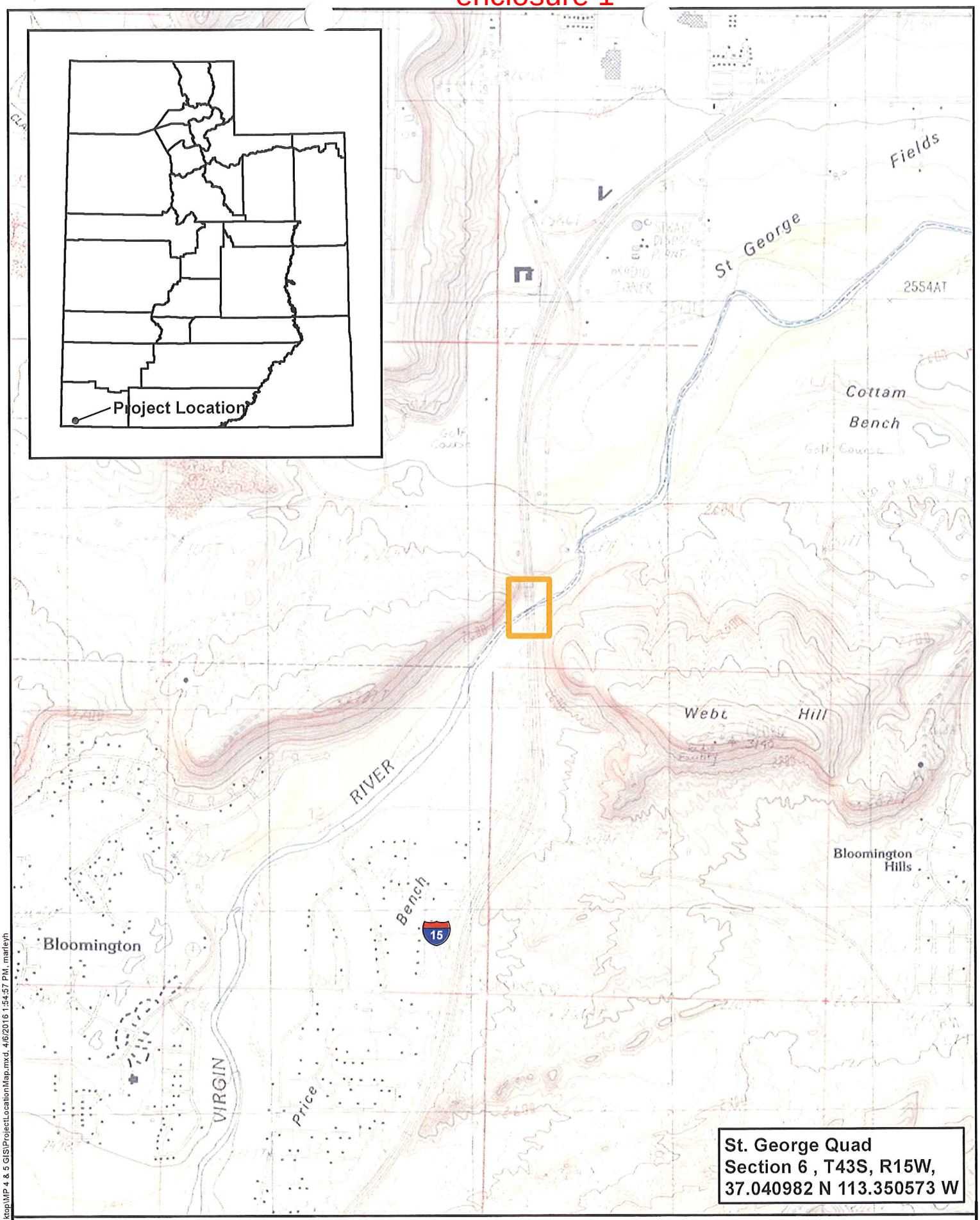

Delineation Study Area

0 1,200 2,400 Feet

1" = 2400'

I-15; Brigham Road to Dixie Drive

Project Location Map

C:\Users\marleyh\Desktop\MP 4 & 5 GIS\ProjectLocationMap.mxd, 4/6/2016 1:54:57 PM, marleyh

enclosure 2

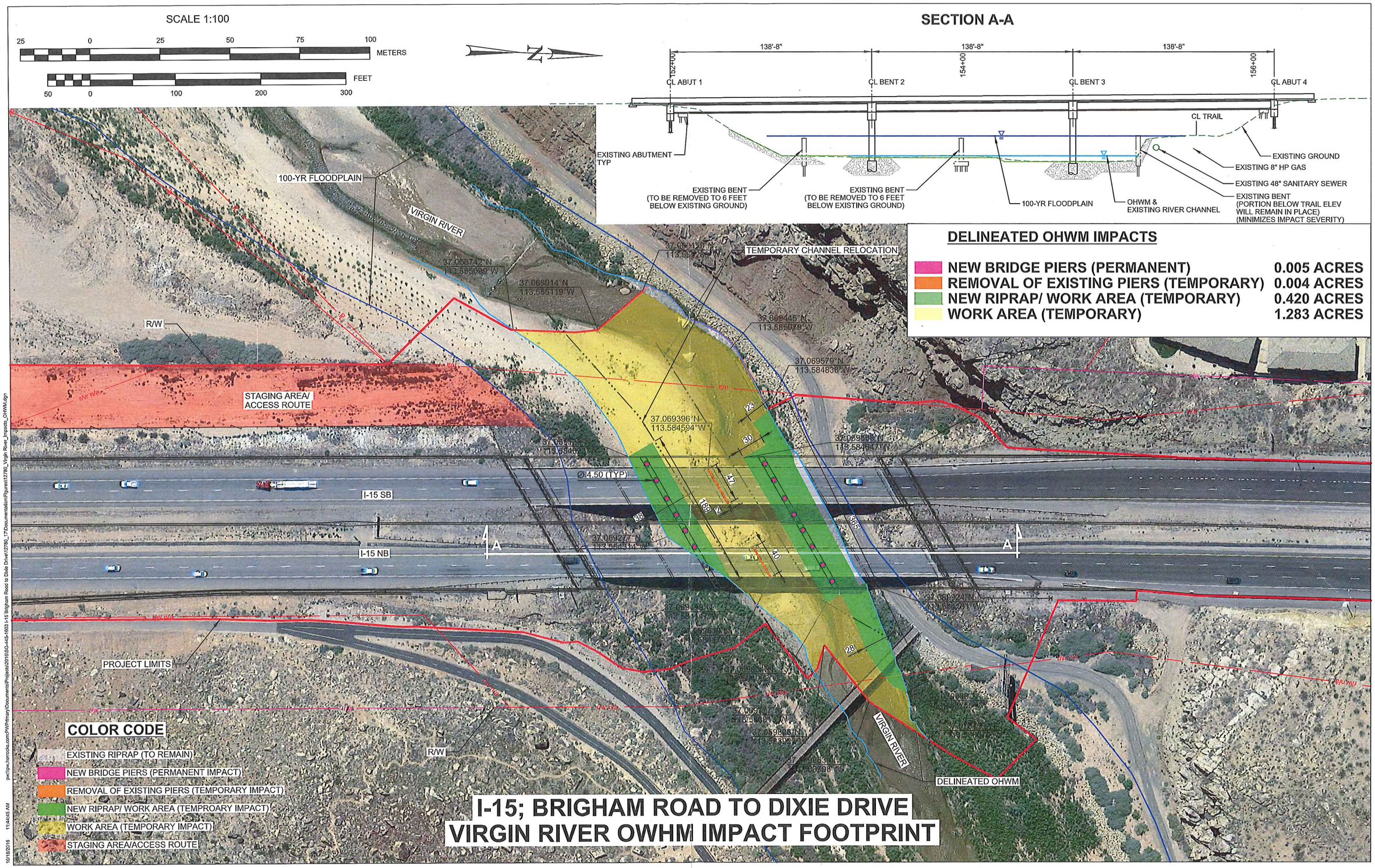
SCALE 1:100
METERS
FEET
SECTION A-A
138'-8"
CL ABUT 1
CL BENT 2
CL BENT 3
CL ABUT 4
CL TRAIL
EXISTING ABUTMENT TYP
EXISTING BENT (TO BE REMOVED TO 6 FEET BELOW EXISTING GROUND)
100-YR FLOODPLAIN
OHWM & EXISTING RIVER CHANNEL
EXISTING GROUND
EXISTING 8" HP GAS
EXISTING 48" SANITARY SEWER
EXISTING BENT (PORTION BELOW TRAIL ELEV WILL REMAIN IN PLACE) (MINIMIZES IMPACT SEVERITY)
DELINEATED OHWM IMPACTS
NEW BRIDGE PIERS (PERMANENT) 0.005 ACRES
REMOVAL OF EXISTING PIERS (TEMPORARY) 0.004 ACRES
NEW RIPRAP/ WORK AREA (TEMPORARY) 0.420 ACRES
WORK AREA (TEMPORARY) 1.283 ACRES
VIRGIN RIVER
TEMPORARY CHANNEL RELOCATION
R/W
STAGING AREA/ ACCESS ROUTE
I-15 SB
I-15 NB
PROJECT LIMITS
DELINEATED OHWM
COLOR CODE
EXISTING RIPRAP (TO REMAIN)
NEW BRIDGE PIERS (PERMANENT IMPACT)
REMOVAL OF EXISTING PIERS (TEMPORARY IMPACT)
NEW RIPRAP/ WORK AREA (TEMPROARY IMPACT)
WORK AREA (TEMPORARY IMPACT)
STAGING AREA/ACCESS ROUTE
I-15; BRIGHAM ROAD TO DIXIE DRIVE
VIRGIN RIVER OWHM IMPACT FOOTPRINT

enclosure 3

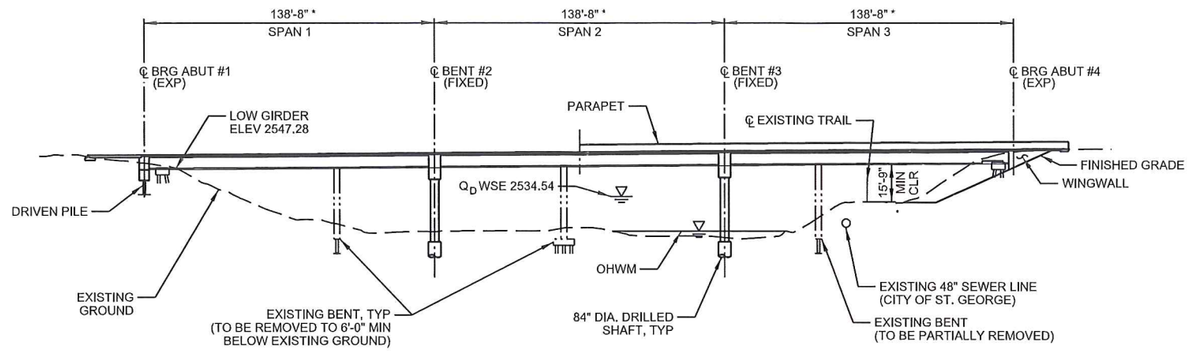

RIVER CHANNEL LOCATION BEFORE CONSTRUCTION

NORMAL TO I-15 CONTROL LINE
* MEASURED ALONG I-15 CONTROL LINE

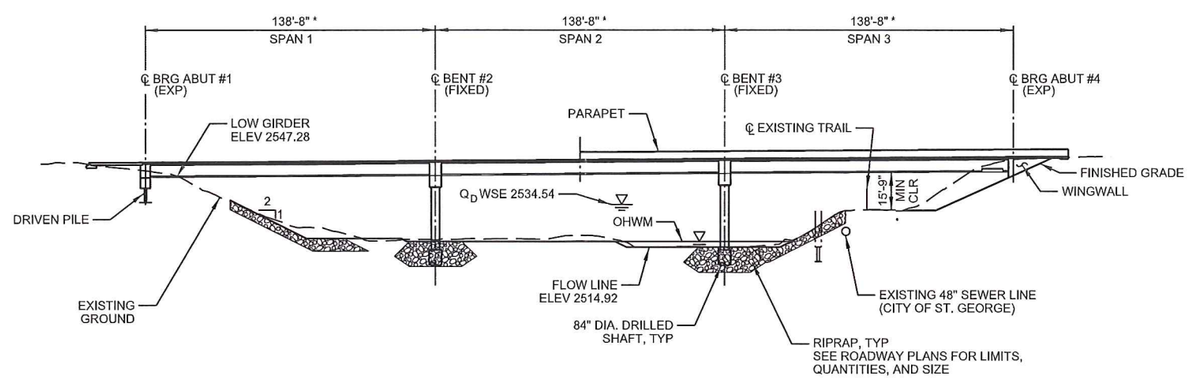

RIVER CHANNEL LOCATION POST CONSTRUCTION

NORMAL TO I-15 CONTROL LINE
* MEASURED ALONG I-15 CONTROL LINE

14. Linear Transportation Projects. Activities required for the construction, expansion, modification, or improvement of linear transportation projects (e.g., roads, highways, railways, trails, airport runways, and taxiways) in waters of the United States. For linear transportation projects in non-tidal waters, the discharge cannot cause the loss of greater than 1/2-acre of waters of the United States. For linear transportation projects in tidal waters, the discharge cannot cause the loss of greater than 1/3-acre of waters of the United States. Any stream channel modification, including bank stabilization, is limited to the minimum necessary to construct or protect the linear transportation project; such modifications must be in the immediate vicinity of the project.

This NWP also authorizes temporary structures, fills, and work necessary to construct the linear transportation project. Appropriate measures must be taken to maintain normal downstream flows and minimize flooding to the maximum extent practicable, when temporary structures, work, and discharges, including cofferdams, are necessary for construction activities, access fills, or dewatering of construction sites. Temporary fills must consist of materials, and be placed in a manner, that will not be eroded by expected high flows. Temporary fills must be removed in their entirety and the affected areas returned to pre-construction elevations. The areas affected by temporary fills must be revegetated, as appropriate.

This NWP cannot be used to authorize non-linear features commonly associated with transportation projects, such as vehicle maintenance or storage buildings, parking lots, train stations, or aircraft hangars.

Notification: The permittee must submit a pre-construction notification to the district engineer prior to commencing the activity if: (1) the loss of waters of the United States exceeds 1/10-acre; or (2) there is a discharge in a special aquatic site, including wetlands. (See general condition 31.) (Sections 10 and 404)

Note: Some discharges for the construction of farm roads or forest roads, or temporary roads for moving mining equipment, may qualify for an exemption under Section 404(f) of the Clean Water Act (see 33 CFR 323.4).

A. **Regional Conditions**

1. **Regional Conditions for California, excluding the Tahoe Basin**

http://www.spk.usace.army.mil/Portals/12/documents/regulatory/nwp/2012_nwps/2012-NWP-RC-CA.pdf

2. **Regional Conditions for Nevada, including the Tahoe Basin**

http://www.spk.usace.army.mil/Portals/12/documents/regulatory/nwp/2012_nwps/2012-NWP-RC-NV.pdf

3. **Regional Conditions for Utah**

http://www.spk.usace.army.mil/Portals/12/documents/regulatory/nwp/2012_nwps/2012-NWP-RC-UT.pdf

4. **Regional Conditions for Colorado**.

http://www.spk.usace.army.mil/Portals/12/documents/regulatory/nwp/2012_nwps//2012-NWP-RC-CO.pdf

B. **Nationwide Permit General Conditions**

Note: To qualify for NWP authorization, the prospective permittee must comply with the following general conditions, as applicable, in addition to any regional or case-specific conditions imposed by the division engineer or district engineer. Prospective permittees should contact the appropriate Corps district office to determine if regional conditions have been imposed on an NWP. Prospective permittees should also contact the appropriate Corps district office to determine the status of Clean Water Act Section 401 water quality certification and/or Coastal Zone Management Act consistency for an NWP. Every person who may wish to obtain permit authorization under one or more NWPs, or who is currently relying on an existing or prior permit authorization under one or more NWPs, has been and is on notice that all of the provisions of 33 CFR §§ 330.1 through 330.6 apply to every NWP authorization. Note especially 33 CFR § 330.5 relating to the modification, suspension, or revocation of any NWP authorization.

☐ 1. **Navigation**.

☐ (a) No activity may cause more than a minimal adverse effect on navigation.

☐ (b) Any safety lights and signals prescribed by the U.S. Coast Guard, through regulations or otherwise, must be installed and maintained at the permittee's expense on authorized facilities in navigable waters of the United States.

☐ (c) The permittee understands and agrees that, if future operations by the United States require the removal, relocation, or other alteration, of the structure or work herein authorized, or if, in the opinion of the Secretary of the Army or his authorized representative, said structure or work shall cause unreasonable obstruction to the free navigation of the navigable waters,

the permittee will be required, upon due notice from the Corps of Engineers, to remove, relocate, or alter the structural work or obstructions caused thereby, without expense to the United States. No claim shall be made against the United States on account of any such removal or alteration.

☐ 2. **Aquatic Life Movements.** No activity may substantially disrupt the necessary life cycle movements of those species of aquatic life indigenous to the waterbody, including those species that normally migrate through the area, unless the activity's primary purpose is to impound water. All permanent and temporary crossings of waterbodies shall be suitably culverted, bridged, or otherwise designed and constructed to maintain low flows to sustain the movement of those aquatic species.

☐ 3. **Spawning Areas**. Activities in spawning areas during spawning seasons must be avoided to the maximum extent practicable. Activities that result in the physical destruction (e.g., through excavation, fill, or downstream smothering by substantial turbidity) of an important spawning area are not authorized.

☐ 4. **Migratory Bird Breeding Areas.** Activities in waters of the United States that serve as breeding areas for migratory birds must be avoided to the maximum extent practicable.

☐ 5. **Shellfish Beds**. No activity may occur in areas of concentrated shellfish populations, unless the activity is directly related to a shellfish harvesting activity authorized by NWPs 4 and 48, or is a shellfish seeding or habitat restoration activity authorized by NWP 27.

☐ 6. **Suitable Material**. No activity may use unsuitable material (e.g., trash, debris, car bodies, asphalt, etc.). Material used for construction or discharged must be free from toxic pollutants in toxic amounts (see Section 307 of the Clean Water Act).

☐ 7. **Water Supply Intakes**. No activity may occur in the proximity of a public water supply intake, except where the activity is for the repair or improvement of public water supply intake structures or adjacent bank stabilization.

☐ 8. **Adverse Effects From Impoundments**. If the activity creates an impoundment of water, adverse effects to the aquatic system due to accelerating the passage of water, and/or restricting its flow must be minimized to the maximum extent practicable.

☐ 9. **Management of Water Flows**. To the maximum extent practicable, the pre-construction course, condition, capacity, and location of open waters must be maintained for each activity, including stream channelization and storm water management activities, except as provided below. The activity must be constructed to withstand expected high flows. The activity must not restrict or impede the passage of normal or high flows, unless the primary purpose of the activity is to impound water or manage high flows. The activity may alter the pre-construction course, condition, capacity, and location of open waters if it benefits the aquatic environment (e.g., stream restoration or relocation activities).

☐ 10. **Fills Within 100-Year Floodplains**. The activity must comply with applicable FEMA-approved state or local floodplain management requirements.

☐ 11. **Equipment**. Heavy equipment working in wetlands or mudflats must be placed on mats, or other measures must be taken to minimize soil disturbance.

☐ 12. **Soil Erosion and Sediment Controls**. Appropriate soil erosion and sediment controls must be used and maintained in effective operating condition during construction, and all exposed soil and other fills, as well as any work below the ordinary high water mark or high tide line, must be permanently stabilized at the earliest practicable date. Permittees are encouraged to perform work within waters of the United States during periods of low-flow or no-flow.

☐ 13. **Removal of Temporary Fills**. Temporary fills must be removed in their entirety and the affected areas returned to pre-construction elevations. The affected areas must be revegetated, as appropriate.

☐ 14. **Proper Maintenance**. Any authorized structure or fill shall be properly maintained, including maintenance to ensure public safety and compliance with applicable NWP general conditions, as well as any activity-specific conditions added by the district engineer to an NWP authorization.

☐ 15. **Single and Complete Project**. The activity must be a single and complete project. The same NWP cannot be used more than once for the same single and complete project.

☐ 16. **Wild and Scenic Rivers**. No activity may occur in a component of the National Wild and Scenic River System, or in a river officially designated by Congress as a “study river” for possible inclusion in the system while the river is in an official study status, unless the appropriate Federal agency with direct management responsibility for such river, has determined in writing that the proposed activity will not adversely affect the Wild and Scenic River designation or study status. Information on Wild and Scenic Rivers may be obtained from the appropriate Federal land management agency responsible for the designated Wild and Scenic River or study river (e.g., National Park Service, U.S. Forest Service, Bureau of Land Management, U.S. Fish and Wildlife Service).

☐ 17. **Tribal Rights**. No activity or its operation may impair reserved tribal rights, including, but not limited to, reserved water rights and treaty fishing and hunting rights.

☐ 18. **Endangered Species**.

☐ (a) No activity is authorized under any NWP which is likely to directly or indirectly jeopardize the continued existence of a threatened or endangered species or a species proposed for such designation, as identified under the Federal Endangered Species Act (ESA), or which will directly or indirectly destroy or adversely modify the critical habitat of such species. No activity is authorized under any NWP which “may affect” a listed species or critical habitat, unless Section 7 consultation addressing the effects of the proposed activity has been completed.

☐ (b) Federal agencies should follow their own procedures for complying with the requirements of the ESA. Federal permittees must provide the district engineer with the appropriate documentation to

demonstrate compliance with those requirements. The district engineer will review the documentation and determine whether it is sufficient to address ESA compliance for the NWP activity, or whether additional ESA consultation is necessary.

☐ (c) Non-federal permittees must submit a pre-construction notification to the district engineer if any listed species or designated critical habitat might be affected or is in the vicinity of the project, or if the project is located in designated critical habitat, and shall not begin work on the activity until notified by the district engineer that the requirements of the ESA have been satisfied and that the activity is authorized. For activities that might affect Federally-listed endangered or threatened species or designated critical habitat, the pre-construction notification must include the name(s) of the endangered or threatened species that might be affected by the proposed work or that utilize the designated critical habitat that might be affected by the proposed work. The district engineer will determine whether the proposed activity "may affect" or will have "no effect" to listed species and designated critical habitat and will notify the non-Federal applicant of the Corps' determination within 45 days of receipt of a complete pre-construction notification. In cases where the non-Federal applicant has identified listed species or critical habitat that might be affected or is in the vicinity of the project, and has so notified the Corps, the applicant shall not begin work until the Corps has provided notification the proposed activities will have "no effect" on listed species or critical habitat, or until Section 7 consultation has been completed. If the non-Federal applicant has not heard back from the Corps within 45 days, the applicant must still wait for notification from the Corps.

☐ (d) As a result of formal or informal consultation with the FWS or NMFS the district engineer may add species-specific regional endangered species conditions to the NWPs.

☐ (e) Authorization of an activity by a NWP does not authorize the "take" of a threatened or endangered species as defined under the ESA. In the absence of separate authorization (e.g., an ESA Section 10 Permit, a Biological Opinion with "incidental take" provisions, etc.) from the U.S. FWS or the NMFS, The Endangered Species Act prohibits any person subject to the jurisdiction of the United States to take a listed species, where "take" means to harass, harm, pursue, hunt, shoot, wound, kill, trap, capture, or collect, or to attempt to engage in any such conduct. The word "harm" in the definition of "take" means an act which actually kills or injures wildlife. Such an act may include significant habitat modification or degradation where it actually kills or injures wildlife by significantly impairing essential behavioral patterns, including breeding, feeding or sheltering.

☐ (f) Information on the location of threatened and endangered species and their critical habitat can be obtained directly from the offices of the U.S. FWS and NMFS or their world wide web pages at http://www.fws.gov/ or http://www.fws.gov/ipac and http://www.noaa.gov/fisheries.html respectively.

☐ 19. **Migratory Birds and Bald and Golden Eagles**. The permittee is responsible for obtaining any "take" permits required under the U.S. Fish and Wildlife Service's regulations governing compliance with the Migratory Bird Treaty Act or the Bald and Golden Eagle Protection Act. The permittee should contact the appropriate local office of the U.S. Fish and Wildlife Service to determine if such "take" permits are required for a particular activity.

☐ 20. **Historic Properties**.

☐ (a) In cases where the district engineer determines that the activity may affect properties listed, or eligible for listing, in the National Register of Historic Places, the activity is not authorized, until the requirements of Section 106 of the National Historic Preservation Act (NHPA) have been satisfied.

☐ (b) Federal permittees should follow their own procedures for complying with the requirements of Section 106 of the National Historic Preservation Act. Federal permittees must provide the district engineer with the appropriate documentation to demonstrate compliance with those requirements. The district engineer will review the documentation and determine whether it is sufficient to address section 106 compliance for the NWP activity, or whether additional section 106 consultation is necessary.

☐ (c) Non-federal permittees must submit a pre-construction notification to the district engineer if the authorized activity may have the potential to cause effects to any historic properties listed on, determined to be eligible for listing on, or potentially eligible for listing on the National Register of Historic Places, including previously unidentified properties. For such activities, the pre-construction notification must state which historic properties may be affected by the proposed work or include a vicinity map indicating the location of the historic properties or the potential for the presence of historic properties. Assistance regarding information on the location of or potential for the presence of historic resources can be sought from the State Historic Preservation Officer or Tribal Historic Preservation Officer, as appropriate, and the National Register of Historic Places (see 33 CFR 330.4(g)). When reviewing pre-construction notifications, district engineers will comply with the current procedures for addressing the requirements of Section 106 of the National Historic Preservation Act. The district engineer shall make a reasonable and good faith effort to carry out appropriate identification efforts, which may include background research, consultation, oral history interviews, sample field investigation, and field survey. Based on the information submitted and these efforts, the district engineer shall determine whether the proposed activity has the potential to cause an effect on the historic properties. Where the non-Federal applicant has identified

historic properties on which the activity may have the potential to cause effects and so notified the Corps, the non-Federal applicant shall not begin the activity until notified by the district engineer either that the activity has no potential to cause effects or that consultation under Section 106 of the NHPA has been completed.

☐ (d) The district engineer will notify the prospective permittee within 45 days of receipt of a complete pre-construction notification whether NHPA Section 106 consultation is required. Section 106 consultation is not required when the Corps determines that the activity does not have the potential to cause effects on historic properties (see 36 CFR §800.3(a)). If NHPA section 106 consultation is required and will occur, the district engineer will notify the non- Federal applicant that he or she cannot begin work until Section 106 consultation is completed. If the non-Federal applicant has not heard back from the Corps within 45 days, the applicant must still wait for notification from the Corps.

☐ (e) Prospective permittees should be aware that section 110k of the NHPA (16 U.S.C. 470h-2(k)) prevents the Corps from granting a permit or other assistance to an applicant who, with intent to avoid the requirements of Section 106 of the NHPA, has intentionally significantly adversely affected a historic property to which the permit would relate, or having legal power to prevent it, allowed such significant adverse effect to occur, unless the Corps, after consultation with the Advisory Council on Historic Preservation (ACHP), determines that circumstances justify granting such assistance despite the adverse effect created or permitted by the applicant. If circumstances justify granting the assistance, the Corps is required to notify the ACHP and provide documentation specifying the circumstances, the degree of damage to the integrity of any historic properties affected, and proposed mitigation. This documentation must include any views obtained from the applicant, SHPO/THPO, appropriate Indian tribes if the undertaking occurs on or affects historic properties on tribal lands or affects properties of interest to those tribes, and other parties known to have a legitimate interest in the impacts to the permitted activity on historic properties.

☐ 21. **Discovery of Previously Unknown Remains and Artifacts**. If you discover any previously unknown historic, cultural or archeological remains and artifacts while accomplishing the activity authorized by this permit, you must immediately notify the district engineer of what you have found, and to the maximum extent practicable, avoid construction activities that may affect the remains and artifacts until the required coordination has been completed. The district engineer will initiate the Federal, Tribal and state coordination required to determine if the items or remains warrant a recovery effort or if the site is eligible for listing in the National Register of Historic Places.

☐ **22. Designated Critical Resource Waters**. Critical resource waters include, NOAA-managed marine sanctuaries and marine monuments, and National Estuarine Research Reserves. The district engineer may designate, after notice and opportunity for public comment, additional waters officially designated by a state as having particular environmental or ecological significance, such as outstanding national resource waters or state natural heritage sites. The district engineer may also designate additional critical resource waters after notice and opportunity for public comment.

☐ (a) Discharges of dredged or fill material into waters of the United States are not authorized by NWPs 7, 12, 14, 16, 17, 21, 29, 31, 35, 39, 40, 42, 43, 44, 49, 50, 51, and 52 for any activity within, or directly affecting, critical resource waters, including wetlands adjacent to such waters.

☐ (b) For NWPs 3, 8, 10, 13, 15, 18, 19, 22, 23, 25, 27, 28, 30, 33, 34, 36, 37, and 38, notification is required in accordance with general condition 31, for any activity proposed in the designated critical resource waters including wetlands adjacent to those waters. The district engineer may authorize activities under these NWPs only after it is determined that the impacts to the critical resource waters will be no more than minimal.

☐ **23. Mitigation**. The district engineer will consider the following factors when determining appropriate and practicable mitigation necessary to ensure that adverse effects on the aquatic environment are minimal:

☐ (a) The activity must be designed and constructed to avoid and minimize adverse effects, both temporary and permanent, to waters of the United States to the maximum extent practicable at the project site (i.e., on site).

☐ (b) Mitigation in all its forms (avoiding, minimizing, rectifying, reducing, or compensating for resource losses) will be required to the extent necessary to ensure that the adverse effects to the aquatic environment are minimal.

☐ (c) Compensatory mitigation at a minimum one-for-one ratio will be required for all wetland losses that exceed 1/10-acre and require pre-construction notification, unless the district engineer determines in writing that either some other form of mitigation would be more environmentally appropriate or the adverse effects of the proposed activity are minimal, and provides a project-specific waiver of this requirement. For wetland losses of 1/10-acre or less that require pre-construction notification, the district engineer may determine on a case-by-case basis that compensatory mitigation is required to ensure that the activity results in minimal adverse effects on the aquatic environment. Compensatory mitigation projects provided to offset losses of aquatic resources must comply with the applicable provisions of 33 CFR part 332.

☐ (1) The prospective permittee is responsible for proposing an appropriate compensatory mitigation option if compensatory mitigation is necessary to ensure that the activity results in minimal adverse effects on the aquatic environment.

☐ (2) Since the likelihood of success is greater and the impacts to potentially valuable uplands are reduced, wetland restoration should be the first compensatory mitigation option considered.

☐ (3) If permittee-responsible mitigation is the proposed option, the prospective permittee is responsible for submitting a mitigation plan. A conceptual or detailed mitigation plan may be used by the district engineer to make the decision on the NWP verification request, but a final mitigation plan that addresses the applicable requirements of 33 CFR 332.4(c)(2) – (14) must be approved by the district engineer before the permittee begins work in waters of the United States, unless the district engineer determines that prior approval of the final mitigation plan is not practicable or not necessary to ensure timely completion of the required compensatory mitigation (see 33 CFR 332.3(k)(3)).

☐ (4) If mitigation bank or in-lieu fee program credits are the proposed option, the mitigation plan only needs to address the baseline conditions at the impact site and the number of credits to be provided.

☐ (5) Compensatory mitigation requirements (e.g., resource type and amount to be provided as compensatory mitigation, site protection, ecological performance standards, monitoring requirements) may be addressed through conditions added to the NWP authorization, instead of components of a compensatory mitigation plan.

☐ (d) For losses of streams or other open waters that require pre-construction notification, the district engineer may require compensatory mitigation, such as stream rehabilitation, enhancement, or preservation, to ensure that the activity results in minimal adverse effects on the aquatic environment.

☐ (e) Compensatory mitigation will not be used to increase the acreage losses allowed by the acreage limits of the NWPs. For example, if an NWP has an acreage limit of 1/2-acre, it cannot be used to authorize any project resulting in the loss of greater than 1/2-acre of waters of the United States, even if compensatory mitigation is provided that replaces or restores some of the lost waters. However, compensatory mitigation can and should be used, as necessary, to ensure that a project already meeting the established acreage limits also satisfies the minimal impact requirement associated with the NWPs.

☐ (f) Compensatory mitigation plans for projects in or near streams or other open waters will normally include a requirement for the restoration or establishment, maintenance, and legal protection (e.g., conservation easements) of riparian areas next to open waters. In some cases, riparian areas may be the only compensatory mitigation required. Riparian areas should consist of native species. The width of the required riparian area will address documented water quality or aquatic habitat loss concerns. Normally, the riparian area will be 25 to 50 feet wide on each side of the stream, but the district engineer may require slightly wider riparian areas to address documented water quality or habitat loss concerns. If it is not possible to establish a riparian area on both sides of a stream, or if the waterbody is a lake or coastal waters, then restoring or establishing a riparian area along a single bank or shoreline may be sufficient. Where both wetlands and open waters exist on the project site, the district engineer will determine the appropriate compensatory mitigation (e.g., riparian areas and/or wetlands compensation) based on what is best for the aquatic environment on a watershed basis. In cases where riparian areas are determined to be the most appropriate form of compensatory mitigation, the district engineer may waive or reduce the requirement to provide wetland compensatory mitigation for wetland losses.

☐ (g) Permittees may propose the use of mitigation banks, in-lieu fee programs, or separate permittee-responsible mitigation. For activities resulting in the loss of marine or estuarine resources, permittee-responsible compensatory mitigation may be environmentally preferable if there are no mitigation banks or in-lieu fee programs in the area that have marine or estuarine credits available for sale or transfer to the permittee. For permittee-responsible mitigation, the special conditions of the NWP verification must clearly indicate the party or parties responsible for the implementation and performance of the compensatory mitigation project, and, if required, its long-term management.

(h) Where certain functions and services of waters of the United States are permanently adversely affected, such as the conversion of a forested or scrub-shrub wetland to a herbaceous wetland in a permanently maintained utility line right-of-way, mitigation may be required to reduce the adverse effects of the project to the minimal level.

☐ **24. Safety of Impoundment Structures**. To ensure that all impoundment structures are safely designed, the district engineer may require non-Federal applicants to demonstrate that the structures comply with established state dam safety criteria or have been designed by qualified persons. The district engineer may also require documentation that the design has been independently reviewed by similarly qualified persons, and appropriate modifications made to ensure safety.

☐ **25. Water Quality**. Where States and authorized Tribes, or EPA where applicable, have not previously certified compliance of an NWP with CWA Section 401, individual 401 Water Quality Certification must be obtained or waived (see 33 CFR 330.4(c)). The district engineer or State or Tribe may require additional water quality management measures to ensure that the authorized activity does not result in more than minimal degradation of water quality.

☐ **26. Coastal Zone Management**. In coastal states where an NWP has not previously received a state coastal zone management consistency concurrence, an individual state coastal zone management consistency concurrence must be obtained, or a presumption of concurrence must occur (see 33 CFR 330.4(d)). The district engineer or a State may require additional measures to ensure that the authorized activity is consistent with state coastal zone management requirements.

☐ **27. Regional and Case-By-Case Conditions**. The activity must comply with any regional conditions that may have been added by the Division Engineer (see 33 CFR 330.4(e)) and with any case specific conditions added by the Corps or by the state, Indian Tribe, or U.S. EPA in its section 401 Water Quality Certification, or by the state in its Coastal Zone Management Act consistency determination.

☐ **28. Use of Multiple Nationwide Permits**. The use of more than one NWP for a single and complete project is prohibited, except when the acreage loss of waters of the United States authorized by the NWPs does not exceed the acreage limit of the NWP with the highest specified acreage limit. For example, if a road crossing over tidal waters is constructed under NWP 14, with associated bank stabilization authorized by NWP 13, the maximum acreage loss of waters of the United States for the total project cannot exceed 1/3-acre.

☐ **29. Transfer of Nationwide Permit Verifications**. If the permittee sells the property associated with a nationwide permit verification, the permittee may transfer the nationwide permit verification to the new owner by submitting a letter to the appropriate Corps district office to validate the transfer. A copy of the nationwide permit verification must be attached to the letter, and the letter must contain the following statement and signature:

> "When the structures or work authorized by this nationwide permit are still in existence at the time the property is transferred, the terms and conditions of this nationwide permit, including any special conditions, will continue to be binding on the new owner(s) of the property. To validate the transfer of this nationwide permit and the associated liabilities associated with compliance with its terms and conditions, have the transferee sign and date below."
>
> ----------
> (Transferee)
>
> ----------
> (Date)

☐ **30. Compliance Certification**. Each permittee who receives an NWP verification letter from the Corps must provide a signed certification documenting completion of the authorized activity and any required compensatory mitigation. The success of any required permittee responsible mitigation, including the achievement of ecological performance standards, will be addressed separately by the district engineer. The Corps will provide the permittee the certification document with the NWP verification letter. The certification document will include:

☐ (a) A statement that the authorized work was done in accordance with the NWP authorization, including any general, regional, or activity-specific conditions;

☐ (b) A statement that the implementation of any required compensatory mitigation was completed in accordance with the permit conditions. If credits from a mitigation bank or in-lieu fee program are used to satisfy the compensatory mitigation requirements, the certification must include the documentation required by 33 CFR 332.3(l)(3) to confirm that the permittee secured the appropriate number and resource type of credits; and

☐ (c) The signature of the permittee certifying the completion of the work and mitigation.

☐ **31. Pre-Construction Notification**.

☐ (a) **Timing**. Where required by the terms of the NWP, the prospective permittee must notify the district engineer by submitting a pre-construction notification (PCN) as early as possible. The district engineer must determine if the PCN is complete within 30 calendar days of the date of receipt and, if the PCN is determined to be incomplete, notify the prospective permittee within that 30 day period to request the additional information necessary to make the PCN complete. The request must specify the information needed to make the PCN complete. As a general rule, district engineers will request additional information necessary to make the PCN complete only once. However, if the prospective permittee does not provide all of the requested information, then the district engineer will notify the prospective permittee that the PCN is still incomplete and the PCN review process will not commence until all of the requested information has been received by the district engineer. The prospective permittee shall not begin the activity until either:

☐ (1) He or she is notified in writing by the district engineer that the activity may proceed under the NWP with any special conditions imposed by the district or division engineer; or

☐ (2) 45 calendar days have passed from the district engineer's receipt of the complete PCN and the prospective permittee has not received written notice from the district or division engineer. However, if the permittee was required to notify the Corps pursuant to general condition 18 that listed species or critical habitat might be affected or in the vicinity of the project, or to notify the Corps pursuant to general condition 20 that the activity may have the potential to cause effects to historic properties, the permittee cannot begin the activity until receiving written notification from the Corps that there is "no effect" on listed species or "no potential to cause effects" on historic properties, or that any consultation required under Section 7 of the Endangered Species Act (see 33 CFR 330.4(f)) and/or Section 106 of the National Historic Preservation (see 33 CFR 330.4(g)) has been completed. Also, work cannot begin under NWPs 21, 49, or 50 until the permittee has received written approval from the Corps. If the proposed activity requires a written waiver to exceed specified limits of an NWP, the permittee may not begin the activity until the district engineer issues the waiver. If the district or division engineer notifies the permittee in writing that an individual permit is required within 45 calendar days of receipt of a complete PCN, the permittee cannot begin the activity until an individual permit has been obtained. Subsequently, the permittee's right to proceed under the NWP may be modified, suspended, or revoked only in accordance with the procedure set forth in 33 CFR 330.5(d)(2)..

☐ (b) <u>Contents of Pre-Construction Notification</u>: The PCN must be in writing and include the following information:

☐ (1) Name, address and telephone numbers of the prospective permittee;

☐ (2) Location of the proposed project;

☐ (3) A description of the proposed project; the project's purpose; direct and indirect adverse environmental effects the project would cause, including the anticipated amount of loss of water of the United States expected to result from the NWP activity, in acres, linear feet, or other appropriate unit of measure; any other NWP(s), regional general permit(s), or individual permit(s) used or intended to be used to authorize any part of the proposed project or any related activity. The description should be sufficiently detailed to allow the district engineer to determine that the adverse effects of the project will be minimal and to determine the need for compensatory mitigation. Sketches should be provided when necessary to show that the activity complies with the terms of the NWP. (Sketches usually clarify the project and when provided results in a quicker decision. Sketches should contain sufficient detail to provide an illustrative description of the proposed activity (e.g., a conceptual plan), but do not need to be detailed engineering plans);

☐ (4) The PCN must include a delineation of wetlands, other special aquatic sites, and other waters, such as lakes and ponds, and perennial, intermittent, and ephemeral streams, on the project site. Wetland delineations must be prepared in accordance with the current method required by the Corps. The permittee may ask the Corps to delineate the special aquatic sites and other waters on the project site, but there may be a delay if the Corps does the delineation, especially if the project site is large or contains many waters of the United States. Furthermore, the 45 day period will not start until the delineation has been submitted to or completed by the Corps, as appropriate;

☐ (5) If the proposed activity will result in the loss of greater than 1/10-acre of wetlands and a PCN is required, the prospective permittee must submit a statement describing how the mitigation requirement will be satisfied, or explaining why the adverse effects are minimal and why compensatory mitigation should not be required. As an alternative, the prospective permittee may submit a conceptual or detailed mitigation plan.

☐ (6) If any listed species or designated critical habitat might be affected or is in the vicinity of the project, or if the project is located in designated critical habitat, for non-Federal applicants the PCN must include the name(s) of those endangered or threatened species that might be affected by the proposed work or utilize the designated critical habitat that may be affected by the proposed work. Federal applicants must provide documentation demonstrating compliance with the Endangered Species Act; and

☐ (7) For an activity that may affect a historic property listed on, determined to be eligible for listing on, or potentially eligible for listing on, the National Register of Historic Places, for non-Federal applicants the PCN must state which historic property may be affected by the proposed work or include a vicinity map indicating the location of the historic property. Federal applicants must provide documentation demonstrating compliance with Section 106 of the National Historic Preservation Act.

☐ (c) Form of Pre-Construction Notification: he standard individual permit application form (Form ENG 4345) may be used, but the completed application form must clearly indicate that it is a PCN and must include all of the information required in paragraphs (b)(1) through (7) of this general condition. A letter containing the required information may also be used.

☐ (d) Agency Coordination:

☐ (1) The district engineer will consider any comments from Federal and state agencies concerning the proposed activity's compliance with the terms and conditions of the NWPs and the need for mitigation to reduce the project's adverse environmental effects to a minimal level.

☐ (2) For all NWP activities that require pre-construction notification and result in the loss of greater than 1/2-acre of waters of the United States, for NWP 21, 29, 39, 40, 42, 43, 44, 50, 51, and 52 activities that require pre-construction notification and will result in the loss of greater than 300 linear feet of intermittent and ephemeral stream bed, and for all NWP 48 activities that require pre-construction notification, the district engineer will immediately provide (e.g., via email, facsimile transmission, overnight mail, or other expeditious manner) a copy of the complete PCN to the appropriate Federal or state offices (U.S. FWS, state natural resource or water quality agency, EPA, State Historic Preservation Officer (SHPO) or Tribal Historic Preservation Office (THPO), and, if appropriate, the NMFS). With the exception of NWP 37, these agencies will have 10 calendar days from the date the material is transmitted to telephone or fax the district engineer notice that they intend to provide substantive, site-specific comments. The comments must explain why the agency believes the adverse effects will be more than minimal. If so contacted by an agency, the district engineer will wait an additional 15 calendar days before making a decision on the pre-construction notification. The district engineer will fully consider agency comments received within the specified time frame concerning the proposed activity's compliance with the terms and conditions of the NWPs, including the need for mitigation to ensure the net adverse environmental effects to the aquatic environment of the proposed activity are minimal. The district engineer will provide no response to the resource agency, except as provided below. The district engineer will indicate in the administrative record associated with each pre-construction notification that the resource agencies' concerns were considered. For NWP 37, the emergency watershed protection and rehabilitation activity may proceed immediately in cases where

there is an unacceptable hazard to life or a significant loss of property or economic hardship will occur. The district engineer will consider any comments received to decide whether the NWP 37 authorization should be modified, suspended, or revoked in accordance with the procedures at 33 CFR 330.5.

☐ (3) In cases of where the prospective permittee is not a Federal agency, the district engineer will provide a response to NMFS within 30 calendar days of receipt of any Essential Fish Habitat conservation recommendations, as required by Section 305(b)(4)(B) of the Magnuson-Stevens Fishery Conservation and Management Act.

☐ (4) Applicants are encouraged to provide the Corps with either electronic files or multiple copies of pre-construction notifications to expedite agency coordination.

C. District Engineer's Decision

☐ 1. In reviewing the PCN for the proposed activity, the district engineer will determine whether the activity authorized by the NWP will result in more than minimal individual or cumulative adverse environmental effects or may be contrary to the public interest. For a linear project, this determination will include an evaluation of the individual crossings to determine whether they individually satisfy the terms and conditions of the NWP(s), as well as the cumulative effects caused by all of the crossings authorized by NWP. If an applicant requests a waiver of the 300 linear foot limit on impacts to intermittent or ephemeral streams or of an otherwise applicable limit, as provided for in NWPs 13, 21, 29, 36, 39, 40, 42, 43, 44, 50, 51 or 52, the district engineer will only grant the waiver upon a written determination that the NWP activity will result in minimal adverse effects. When making minimal effects determinations the district engineer will consider the direct and indirect effects caused by the NWP activity. The district engineer will also consider site specific factors, such as the environmental setting in the vicinity of the NWP activity, the type of resource that will be affected by the NWP activity, the functions provided by the aquatic resources that will be affected by the NWP activity, the degree or magnitude to which the aquatic resources perform those functions, the extent that aquatic resource functions will be lost as a result of the NWP activity (e.g., partial or complete loss), the duration of the adverse effects (temporary or permanent), the importance of the aquatic resource functions to the region (e.g., watershed or ecoregion), and mitigation required by the district engineer. If an appropriate functional assessment method is available and practicable to use, that assessment method may be used by the district engineer to assist in the minimal adverse effects determination. The district engineer may add case-specific special conditions to the NWP authorization to address site-specific environmental concerns.

☐ 2. If the proposed activity requires a PCN and will result in a loss of greater than 1/10- acre of wetlands, the prospective permittee should submit a mitigation proposal with the PCN. Applicants may also propose compensatory mitigation for projects with smaller impacts. The district engineer will consider any proposed compensatory mitigation the applicant has included in the proposal in determining whether the net adverse environmental effects to the aquatic environment of the proposed activity are minimal. The compensatory mitigation proposal may be either conceptual or detailed. If the district engineer determines that the activity complies with the terms and conditions of the NWP and that the adverse effects on the aquatic environment are minimal, after considering mitigation, the district engineer will notify the permittee and include any activity-specific conditions in the NWP verification the district engineer deems necessary. Conditions for compensatory mitigation requirements must comply with the appropriate provisions at 33 CFR 332.3(k). The district engineer must approve the final mitigation plan before the permittee commences work in waters of the United States, unless the district engineer determines that prior approval of the final mitigation plan is not practicable or not necessary to ensure timely completion of the required compensatory mitigation. If the prospective permittee elects to submit a compensatory mitigation plan with the PCN, the district engineer will expeditiously review the proposed compensatory mitigation plan. The district engineer must review the proposed compensatory mitigation plan within 45 calendar days of receiving a complete PCN and determine whether the proposed mitigation would ensure no more than minimal adverse effects on the aquatic environment. If the net adverse effects of the project on the aquatic environment (after consideration of the compensatory mitigation proposal) are determined by the district engineer to be minimal, the district engineer will provide a timely written response to the applicant. The response will state that the project can proceed under the terms and conditions of the NWP, including any activity-specific conditions added to the NWP authorization by the district engineer.

☐ 3. If the district engineer determines that the adverse effects of the proposed work are more than minimal, then the district engineer will notify the applicant either: (a) That the project does not qualify for authorization under the NWP and instruct the applicant on the procedures to seek authorization under an individual permit; (b) that the project is authorized under the NWP subject to the applicant's submission of a mitigation plan that would reduce the adverse effects on the aquatic environment to the minimal level; or (c) that the project is authorized under the NWP with specific modifications or conditions. Where the district engineer determines that mitigation is required to ensure no more than minimal adverse effects occur to the aquatic environment, the activity will be authorized within the 45-day PCN period, with activity-specific conditions that state the mitigation requirements. The authorization will include the necessary conceptual or detailed mitigation or a requirement that the applicant submit a mitigation plan that would reduce the adverse effects on the aquatic environment to the minimal level. When mitigation is required, no work in waters of the United States may occur until the district engineer has approved a specific mitigation plan or has determined that prior approval of a final mitigation plan is not practicable or not necessary to ensure timely completion of the required compensatory mitigation.

D. **Further Information**

1. District Engineers have authority to determine if an activity complies with the terms and conditions of an NWP.

2. NWPs do not obviate the need to obtain other federal, state, or local permits, approvals, or authorizations required by law.

3. NWPs do not grant any property rights or exclusive privileges.

4. NWPs do not authorize any injury to the property or rights of others.

5. NWPs do not authorize interference with any existing or proposed Federal project.

E. **Definitions**

Best management practices (BMPs): Policies, practices, procedures, or structures implemented to mitigate the adverse environmental effects on surface water quality resulting from development. BMPs are categorized as structural or non-structural.

Compensatory mitigation: The restoration (re-establishment or rehabilitation), establishment (creation), enhancement, and/or in certain circumstances preservation of aquatic resources for the purposes of offsetting unavoidable adverse impacts which remain after all appropriate and practicable avoidance and minimization has been achieved.

Currently serviceable: Useable as is or with some maintenance, but not so degraded as to essentially require reconstruction.

Direct effects: Effects that are caused by the activity and occur at the same time and place.

Discharge: The term "discharge" means any discharge of dredged or fill material.

Enhancement: The manipulation of the physical, chemical, or biological characteristics of an aquatic resource to heighten, intensify, or improve a specific aquatic resource function(s). Enhancement results in the gain of selected aquatic resource function(s), but may also lead to a decline in other aquatic resource function(s). Enhancement does not result in a gain in aquatic resource area.

Ephemeral stream: An ephemeral stream has flowing water only during, and for a short duration after, precipitation events in a typical year. Ephemeral stream beds are located above the water table year-round. Groundwater is not a source of water for the stream. Runoff from rainfall is the primary source of water for stream flow.

Establishment (creation): The manipulation of the physical, chemical, or biological characteristics present to develop an aquatic resource that did not previously exist at an upland site. Establishment results in a gain in aquatic resource area.

High Tide Line: The line of intersection of the land with the water's surface at the maximum height reached by a rising tide. The high tide line may be determined, in the absence of actual data, by a line of oil or scum along shore objects, a more or less continuous deposit of fine shell or debris on the foreshore or berm, other physical markings or characteristics, vegetation lines, tidal gages, or other suitable means that delineate the general height reached by a rising tide. The line encompasses spring high tides and other high tides that occur with periodic frequency but does not include storm surges in which there is a departure from the normal or predicted reach of the tide due to the piling up of water against a coast by strong winds such as those accompanying a hurricane or other intense storm.

Historic Property: Any prehistoric or historic district, site (including archaeological site), building, structure, or other object included in, or eligible for inclusion in, the National Register of Historic Places maintained by the Secretary of the Interior. This term includes artifacts, records, and remains that are related to and located within such properties. The term includes properties of traditional religious and cultural importance to an Indian tribe or Native Hawaiian organization and that meet the National Register criteria (36 CFR part 60).

Independent utility: A test to determine what constitutes a single and complete non-linear project in the Corps regulatory program. A project is considered to have independent utility if it would be constructed absent the construction of other projects in the project area. Portions of a multi-phase project that depend upon other phases of the project do not have independent utility. Phases of a project that would be constructed even if the other phases were not built can be considered as separate single and complete projects with independent utility.

Indirect effects: Effects that are caused by the activity and are later in time or farther removed in distance, but are still reasonably foreseeable.

I**ntermittent stream**: An intermittent stream has flowing water during certain times of the year, when groundwater provides water for stream flow. During dry periods, intermittent streams may not have flowing water. Runoff from rainfall is a supplemental source of water for stream flow.

Loss of waters of the United States: Waters of the United States that are permanently adversely affected by filling, flooding, excavation, or drainage because of the regulated activity. Permanent adverse effects include permanent discharges of dredged or fill material that change an aquatic area to dry land, increase the bottom elevation of a waterbody, or change the use of a waterbody. The acreage of loss of waters of the United States is a threshold measurement of the impact to jurisdictional waters for determining whether a project may qualify for an NWP; it is not a net threshold that is calculated after considering compensatory mitigation that may be used to offset losses of aquatic functions and services. The loss of stream bed includes the linear feet of stream bed that is filled or excavated. Waters of the United States temporarily filled, flooded, excavated, or drained, but restored to pre-construction contours and elevations after construction, are not included in the measurement of loss of waters of the United States. Impacts resulting from activities eligible for exemptions under Section 404(f) of the Clean Water Act are not considered when calculating the loss of waters of the United States.

Non-tidal wetland: A non-tidal wetland is a wetland that is not subject to the ebb and flow of tidal waters. The definition of a wetland can be found at 33 CFR 328.3(b). Non-tidal wetlands contiguous to tidal waters are located landward of the high tide line (i.e., spring high tide line).

Open water: For purposes of the NWPs, an open water is any area that in a year with normal patterns of precipitation has water flowing or standing above ground to the extent that an ordinary high water mark can be determined. Aquatic vegetation within the area of standing or flowing water is either non-emergent, sparse, or absent. Vegetated shallows are considered to be open waters. Examples of "open waters" include rivers, streams, lakes, and ponds.

Ordinary High Water Mark: An ordinary high water mark is a line on the shore established by the fluctuations of water and indicated by physical characteristics, or by other appropriate means that consider the characteristics of the surrounding areas (see 33 CFR 328.3(e)).

Perennial stream: A perennial stream has flowing water year-round during a typical year. The water table is located above the stream bed for most of the year. Groundwater is the primary source of water for stream flow. Runoff from rainfall is a supplemental source of water for stream flow.

Practicable: Available and capable of being done after taking into consideration cost, existing technology, and logistics in light of overall project purposes.

Pre-construction notification: A request submitted by the project proponent to the Corps for confirmation that a particular activity is authorized by nationwide permit. The request may be a permit application, letter, or similar document that includes information about the proposed work and its anticipated environmental effects. Pre-construction notification may be required by the terms and conditions of a nationwide permit, or by regional conditions. A pre-construction notification may be voluntarily submitted in cases where pre-construction notification is not required and the project proponent wants confirmation that the activity is authorized by nationwide permit.

Preservation: The removal of a threat to, or preventing the decline of, aquatic resources by an action in or near those aquatic resources. This term includes activities commonly associated with the protection and maintenance of aquatic resources through the implementation of appropriate legal and physical mechanisms. Preservation does not result in a gain of aquatic resource area or functions.

Re-establishment: The manipulation of the physical, chemical, or biological characteristics of a site with the goal of returning natural/historic functions to a former aquatic resource. Re-establishment results in rebuilding a former aquatic resource and results in a gain in aquatic resource area and functions.

Rehabilitation: The manipulation of the physical, chemical, or biological characteristics of a site with the goal of repairing natural/historic functions to a degraded aquatic resource. Rehabilitation results in a gain in aquatic resource function, but does not result in a gain in aquatic resource area.

Restoration: The manipulation of the physical, chemical, or biological characteristics of a site with the goal of returning natural/historic functions to a former or degraded aquatic resource. For the purpose of tracking net gains in aquatic resource area, restoration is divided into two categories: re-establishment and rehabilitation.

Riffle and pool complex: Riffle and pool complexes are special aquatic sites under the 404(b)(1) Guidelines. Riffle and pool complexes sometimes characterize steep gradient sections of streams. Such stream sections are recognizable by their hydraulic characteristics. The rapid movement of water over a course substrate in riffles results in a rough flow, a turbulent surface, and high dissolved oxygen levels in the water. Pools are deeper areas associated with riffles. A slower stream velocity, a streaming flow, a smooth surface, and a finer substrate characterize pools.

Riparian areas: Riparian areas are lands adjacent to streams, lakes, and estuarine-marine shorelines. Riparian areas are transitional between terrestrial and aquatic ecosystems, through which surface and subsurface hydrology connects riverine, lacustrine, estuarine, and marine waters with their adjacent wetlands, non-wetland waters, or uplands. Riparian areas provide a variety of ecological functions and services and help improve or maintain local water quality. (See general condition 23.)

Shellfish seeding: The placement of shellfish seed and/or suitable substrate to increase shellfish production. Shellfish seed consists of immature individual shellfish or individual shellfish attached to shells or shell fragments (i.e., spat on shell). Suitable substrate may consist of shellfish shells, shell fragments, or other appropriate materials placed into waters for shellfish habitat.

Single and complete linear project: A linear project is a project constructed for the purpose of getting people, goods, or services from a point of origin to a terminal point, which often involves multiple crossings of one or more waterbodies at separate and distant locations. The term "single and complete project" is defined as that portion of the total linear project proposed or accomplished by one owner/developer or partnership or other association of owners/developers that includes all crossings of a single water of the United States (i.e., a single waterbody) at a specific location. For linear projects crossing a single or multiple waterbodies several times at separate and distant locations, each crossing is considered a single and complete project for purposes of NWP authorization. However, individual channels in a braided stream or river, or individual arms of a large, irregularly shaped wetland or lake, etc., are not separate waterbodies, and crossings of such features cannot be considered separately.

Single and complete non-linear project: For non-linear projects, the term "single and complete project" is defined at 33 CFR 330.2(i) as the total project proposed or accomplished by one owner/developer or partnership or other association of owners/developers. A single and complete non-linear project must have independent utility (see definition of "independent utility"). Single and complete non-linear projects may not be "piecemealed" to avoid the limits in an NWP authorization.

Stormwater management: Stormwater management is the mechanism for controlling stormwater runoff for the purposes of reducing downstream erosion, water quality degradation, and flooding and mitigating the adverse effects of changes in land use on the aquatic environment.

Stormwater management facilities: Stormwater management facilities are those facilities, including but not limited to, stormwater retention and detention ponds and best management practices, which retain water for a period of time to control runoff and/or improve the quality (i.e., by reducing the concentration of nutrients, sediments, hazardous substances and other pollutants) of stormwater runoff.

Stream bed: The substrate of the stream channel between the ordinary high water marks. The substrate may be bedrock or inorganic particles that range in size from clay to boulders. Wetlands contiguous to the stream bed, but outside of the ordinary high water marks, are not considered part of the stream bed.

Stream channelization: The manipulation of a stream's course, condition, capacity, or location that causes more than minimal interruption of normal stream processes. A channelized stream remains a water of the United States.

Structure: An object that is arranged in a definite pattern of organization. Examples of structures include, without limitation, any pier, boat dock, boat ramp, wharf, dolphin, weir, boom, breakwater, bulkhead, revetment, riprap, jetty, artificial island, artificial reef, permanent mooring structure, power transmission line, permanently moored floating vessel, piling, aid to navigation, or any other manmade obstacle or obstruction.

Tidal wetland: A tidal wetland is a wetland (i.e., water of the United States) that is inundated by tidal waters. The definitions of a wetland and tidal waters can be found at 33 CFR 328.3(b) and 33 CFR 328.3(f), respectively. Tidal waters rise and fall in a predictable and measurable rhythm or cycle due to the gravitational pulls of the moon and sun. Tidal waters end where the rise and fall of the water surface can no longer be practically measured in a predictable rhythm due to masking by other waters, wind, or other effects. Tidal wetlands are located channelward of the high tide line, which is defined at 33 CFR 328.3(d).

Vegetated shallows: Vegetated shallows are special aquatic sites under the 404(b)(1) Guidelines. They are areas that are permanently inundated and under normal circumstances have rooted aquatic vegetation, such as seagrasses in marine and estuarine systems and a variety of vascular rooted plants in freshwater systems.

Waterbody: For purposes of the NWPs, a waterbody is a jurisdictional water of the United States. If a jurisdictional wetland is adjacent – meaning bordering, contiguous, or neighboring – to a waterbody determined to be a water of the United States under 33 CFR 328.3(a)(1)-(6), that waterbody and its adjacent wetlands are considered together as a single aquatic unit (see 33 CFR 328.4(c)(2)). Examples of "waterbodies" include streams, rivers, lakes, ponds, and wetlands.

State of Utah

GARY R. HERBERT
Governor

GREG BELL
Lieutenant Governor

Department of
Environmental Quality

Amanda Smith
Executive Director

DIVISION OF WATER QUALITY
Walter L. Baker, P.E.
Director

April 16, 2012

Jason Gipson, Chief Utah/Nevada Regulatory Branch
U.S. Army Corps of Engineers, Sacramento District
Utah Regulatory Office
533 West 2600 South, Suite 150
Bountiful, UT 84010

Dear Mr. Gipson:

Subject: 2012 U.S. Army Corps of Engineers Section 404 Nationwide Permits

Pursuant to the provision of Section 401of the federal Clean Water Act, 33 U.S.C. Section 1341, as amended, and consistent with the Utah Water Quality Act UCA § 19-5-101-124, the Utah Division of Water Quality (DWQ) has the authority to review section 404 permits and issue a 401 water quality certification decision.

DWQ certifies that if the applicants comply with the terms and conditions imposed by the above-referenced permits, the regional conditions set forth by the U.S. Army Corps of Engineers Utah Regulatory Office (COE) and the conditions set forth in this water quality certification, then there is reasonable assurance the discharges will comply with the applicable requirements of the Sections 301, 302, 303, 306 and 307 of the Clean Water Act, including the Utah Water Quality Act UCA § 19-5-101-124.

This certification does not constitute authorization for the applicant from the obligation to obtain any other necessary permits, authorizations or approvals which may be required by federal, state, or local law, including without limitation those overseen by Utah Pollutant Discharge Elimination System (UPDES) program: Construction Dewatering and Hydrostatic Testing, General Permit No. UTG070000 (http://www.waterquality.utah.gov/UPDES/updes_f.html) and the Storm Water General Permit for Construction Activities, Permit No. UTR300000 (https://secure.utah.gov/stormwater/main.html).

In an effort to provide applicants with some of the necessary scientific information to meet the following 401 water quality certification conditions, the Utah Division of Water Quality (DWQ) will soon provide an internet based searchable State surface water quality map application at: http://wq.deq.utah.gov. For all State surface waters this internet application will identify their 303d listing status, Total Maximum Daily Load (TMDL) approval status, TMDL document links, assigned beneficial uses, including blue ribbon fishery designation, any causes of impairment, and

the assigned watershed scientist contact information. We encourage applicants to contact the watershed scientist if they have any questions or need further assistance.

To ensure compliance with water quality standards, DWQ requests, as a required condition of 401 water quality certification, that the following conditions be included in the 404 Nationwide Permits:

1) The Utah Division of Water Quality may require submission of a formal application for an Individual Certification for any project if the project has been determined to likely have a significant adverse effect upon water quality or degrade the waters of the Utah.

2) All activities conducted on impaired waters with a total maximum daily load (TMDL) must be implemented in a manner that is consistent with the TMDL and any other appropriate requirements of federal, state or local law. A list of UDWQ-approved TMDLs is available on-line at: http://www.rules.utah.gov/publicat/code/r317/r317-001.htm#T7 and in the application at: http://wq.deq.utah.gov.

3) All activities shall not cause further degradation of impaired—as defined in DWQ's most recent 303d list—waters regardless of whether a TMDL has been completed. A 303d listing status can be found on-line in the application at: http://wq.deq.utah.gov.

4) All activities conducted in the waters of state must implement and maintain best management practices (BMPs) to fully protect the assigned beneficial uses. If during project implementation there are indications that water quality standards are not being met, then, the BMPs must immediately be modified as necessary to ensure compliance with water quality standards.

5) All activities to be conducted adjacent to or in beneficial use Class 1C (domestic drinking water) streams that are upstream two miles or less from any water intake supply must notify the water supply operator and the local health department in writing 10 days prior to work starting. If the water supply operator or the local health department recommends additional best management practices or monitoring, the applicant must consider those recommendations in their project design. The assigned beneficial use can be found on-line in the application at: http://wq.deq.utah.gov.

6) All activities conducted in the waters of the state must implement BMPs to prevent and control spill of fuel, lubricants or any other toxic material. Utah Code Annotated 19-5-114 requires that any spill, discharge of oil or other substance which may cause pollution to waters of the state must be immediately reported to DWQ at (801) 536-4100 or after hours to (801) 536-4123. Fill cannot be comprised of material that can leach organic chemicals (e.g. asphalt), nutrients (e.g. phosphate rock); construction demolition debris, automobiles or other manufactured equipment, liquid concrete; and/or any other material containing chemicals pollutants (e.g., creosote or pentachlorophenol).

7) Hazardous and otherwise deleterious materials (e.g. oil, gasoline, chemicals, trash, and sawdust) must not be stored, disposed of, or accumulated adjacent to or in the immediate

vicinity of waters of the state unless adequate measures and controls are provided to ensure that those materials will not enter waters of the state.

8) All activities conducted in the waters of state must not use or operate heavy equipment within the stream channel. If in-stream work is unavoidable, it shall be performed in such a manner as to minimize the duration of the disturbance, turbidity increases, substrate disturbance, and riparian vegetation. To the maximum extent practicable, all in-stream work shall be performed during low flow conditions in perennial streams, or no flow in the case of ephemeral and intermittent waterbodies. In-stream work may not be performed during the spawning season.

9) All activities conducted on or immediately adjacent to waters of the state with an assigned beneficial use of 3A (cold water fishery) or has a blue ribbon fishery designation must avoid—to the maximum extent possible—removal of native riparian vegetation that provides stream shading. Assigned beneficial use designations are available on-line in the application at: http://wq.deq.utah.gov. Destruction of any stream shade vegetation within the project area must be replaced with native vegetation that, once mature, will provide similar or greater channel shading that exists prior to project implementation.. The applicant is ultimately responsible for ensuring revegetation success. Prior to vegetation removal the applicant must submit a restoration plan to the DWQ's office that includes:

   i) An estimate of the portion of the shaded water surface area within the project area in each of three shade classes: no shade, poor shade, and shade. Time of the year, time of the day, and weather can affect your observation of shading. Therefore, the relative amount of shade is a professional best-guess estimate. Ideally the applicant would be measuring or estimate the amount of shading that would be expected to occur when the sun is at an angle that provides maximum stream shade and the vegetation is in full leaf-out.

   ii) A revegetation plan that includes planting locations and species that will planted to ensure restoration of existing channel shading.

10) Fertilizer, herbicide and insecticide chemicals used for the project shall be selected and plied in a manner that minimizes environmental impacts and must be approved by the USEPA for the intended use. Application rates printed on the product labels shall be strictly followed. Excess chemicals shall not be applied on recently treated areas and must either be stored, used elsewhere or disposed of appropriately.

11) All NWP 17 (Hydropower) projects require state notification 60 days prior to request for FERC exemption or license. Hydropower project permitted under NWP 17 shall minimize any disturbance to the existing water flow regime, the ecosystem and aquatic habitat.

All conditions established in this certification become part of coverage issued under the relevant Nationwide Permit, and hence are enforceable through the permit and its associated mechanisms. In addition, in event of any violation or threatened violation of the conditions of this certification, the violation or threatened violation shall be subject to any remedies, penalties, process, or sanctions as provided through the state process. In response to a suspected or confirmed violation

of any condition of this certification, DWQ may require the holder of any permit or license subject to this certification to furnish any technical or monitoring reports that DWQ deems appropriate. Please contact Mr. Bill Damery at (801) 536-4354, wdamery@utah.gov with any questions you may have concerning this 401 Water Quality Certification.

Sincerely,

Walter L. Baker, P.E.
Director

WLB:(WED):(wed)
WDAMERY\WP\RDCC\401 CERT NEW\NWP
FILE: 2012 UT CERT NWP Final Draft .docx

Section 00555M

PROJECT # S-I15-1(113)5

PIN # 12780

APPENDIX B

Stream Alteration Permit

GARY R. HERBERT
Governor

SPENCER J. COX
Lieutenant Governor

State of Utah

DEPARTMENT OF NATURAL RESOURCES

MICHAEL R. STYLER
Executive Director

Division of Water Rights

KENT L. JONES
State Engineer/Division Director

ORDER OF THE STATE ENGINEER

FOR STREAM ALTERATION APPLICATION NUMBER **16-81-17SA**
IN THE NAME OF UTAH DEPARTMENT OF TRANSPORTATION – REGION 4
FOR ALTERATION TO THE VIRGIN RIVER IN WASHINGTON COUNTY, UTAH

This **ORDER** is issued pursuant to statute and in accord with the statutory criteria for approval of a stream alteration application that are described at UTAH CODE ANN. § 73-3-29. The State Engineer has determined that this application does meet the necessary legal criteria to **ORDER** the approval of the application based upon the following information and reasoning set forth in the Findings of Fact and Discussion.

FINDINGS OF FACT

1. The application was received by the Division of Water Rights ("Division") on September 15, 2016, and made available for comment on the Division's webpage, provided to pertinent governmental agencies, and to other entities as warranted, for a period of 20 calendar days, said period concluding prior to October 6, 2016.

2. The application contains the following information:
   - The stated description of the proposed project is: To remove an existing bridge and replace with a 3-span structure associated with the Virgin River in Washington County.
   - The stated purpose of the proposed project is: To increase bridge capacity.

3. A site visit was not conducted by Division personnel.

4. The Division received comments or objections on the proposed project from:
   - Kathy Holder – Utah Division of Emergency Management
   - Bill James – Utah Division of Wildlife Resources

   The comments or objections received by the Division are summarized as follows:
   - The applicant must be compliant with all rules and regulations of the Federal Floodplain Insurance Program as administrated by the local city or county floodplain administrator.
   - This section of the Virgin River contains the following native fish species: Desert sucker (Catostomus clarkii), flannelmouth sucker (*Catostomus latipinnis*), Virgin River chub (*Gila seminuda*), Virgin spinedace (*Lepidomeda mollispinis mollispinis*), woundfin (*Plagopterus argentissimus*), and speckled dace (*Rhinichthys osculus*). Virgin River chub and woundfin are listed as endangered under the Endangered Species Act, and the project area occurs within designated critical habitat for both species.

Virgin spinedace are managed under the Virgin Spinedace Conservation Agreement and Strategy, which was formulated to avoid the need for listing of the species under the Endangered Species Act. Flannelmouth sucker are currently managed under a state-wide Conservation and Management Strategy, as well as being included in a range-wide Conservation Agreement and Strategy. Desert sucker are listed as a state species of concern because of their limited distribution. Speckled dace are not listed but are an important native fish in the Virgin River. Because of the importance of the Virgin River to native fish species, we provide the following recommendations regarding any action developed for this project to avoid unnecessary take of native fish:

- Avoid crossing the river whenever possible. If it is necessary for equipment to cross or enter the river, do so only once at a pre-identified crossing point approved by Utah Division of Wildlife Resources (UDWR). Channel diversions, crossings, and in-stream work will require fish clearances. Fish clearance activities must be performed before any construction activities begin in order to minimize take of native fishes. Contact the UDWR's Washington County Field Office personnel (Melinda Bennion 435-619-1229 or main office 435-879-8694) at least 3 business days prior the start of any construction activities that will impact the channel. UDWR personnel will determine if fish clearances are necessary. At a minimum, fish salvage efforts must occur prior to construction of any diversions and before such diversions are removed. Ongoing fish salvage may be required depending on the length of stream impacted and the duration of the impact. In addition, we also request to visit the site during construction activities to ensure protection of native fish species and their habitat.
- Construction activities that may result in any disturbance to the stream should not be completed during critical spawning months; UDWR recommends that no construction activities occur from April 1 to July 31. Exceptions to this should be permitted only when explicit conservation actions are formulated from direct consultation with UDWR Native Aquatics biologist Melinda Bennion (435-619-1229).
- We recommend that living native woody vegetation, especially willows and cottonwoods not be disturbed. Any ground that is graded clean, or where salt cedar (tamarisk) is to be removed, should be required to be re-vegetated with appropriate native woody species.
- Establish a bulldozer-length buffer zone, or maintain an elevation of two feet above the flowing river channel, for all work in the project area. This element is intended to keep all equipment out of the active channel to avoid direct take of conservation fish species. This condition also precludes the need for additional extensive and ongoing fish salvage in the project area during activities.
- During any cutting, filling, or grading of slopes, machinery and associated sediment should not be allowed in the stream. Excavated material and construction debris may not be wasted in any stream channel or placed in flowing waters or adjacent wetlands; this will include material such as grease, oil, joint coating, or any other possible pollutants.

Excess materials must be wasted at an upland site well removed from any channel, and excavated material must be removed from stockpiled areas within 12 months of project completion.

- Fill materials should be free of fines, waste, pollutants, and noxious weeds / seeds.
- Machinery must be properly cleaned and fueled offsite prior to construction.
- In 2009, the Utah Division of Wildlife Resources (UDWR) completed a statewide management plan to address strategies that prevent the spread of aquatic invasive species (AIS) in Utah. The Utah Aquatic Invasive Species Management Plan was created to identify threats and provide techniques to protect Utah's waterways from aquatic nuisance species. Special decontamination procedures are required by the UDWR, and protocols are outlined in the following publication: http://wildlife.utah.gov/mussels/PDF/decon_protocol.pdf

5. The U.S. Army Corps of Engineers is processing a Nationwide Permit for the proposed project.

DISCUSSION

1. Based on a review of the Division's water rights records and/or a review of the application by personnel of the Division's regional office, it is the opinion of the State Engineer that the project will not impair vested water rights.

2. It is the opinion of the State Engineer that the project will not unreasonably or unnecessarily affect recreational use or the natural stream environment.

3. It is the opinion of the State Engineer that the project will not unreasonably or unnecessarily endanger aquatic wildlife.

4. It is the opinion of the State Engineer that the project will not unreasonably or unnecessarily diminish the natural channel's ability to conduct high flows.

5. Other comments or concerns submitted by interested persons or parties are not believed to be within the purview of the State Engineer in evaluating an Application to Alter a Natural Stream.

ORDER

Stream Alteration Application No. **16-81-17SA**, submitted in the name of Utah Department of Transportation – Region 4, applicant, in order to remove an existing bridge and replace with a 3-span structure associated with the Virgin River, a natural stream located in Washington County, Utah, is hereby APPROVED AS A STATE ONLY PERMIT, contingent upon the conditions outlined in this **ORDER**. The applicant is hereby authorized to conduct the work detailed in the application and supporting documentation, as described in this **ORDER**. Any modification or addition to the work may require additional authorization and/or application resubmittal.

1. The expiration date of this order is **October 11, 2018**. Work affecting the bed and/or banks of the stream may not be conducted after this date. Extension of the order is subject to reverification and review by the Division. A request for extension must be submitted in writing to the Division and include an explanation for project delay. The request must be submitted at least 30 days prior to expiration of the order.

2. A copy of this order must be kept onsite at any time the work authorized under this order is in progress.

3. Contact the UDWR's Washington County Field Office personnel (Melinda Bennion 435-619-1229 or main office 435-879-8694) at least 3 business days prior the start of any construction activities that will impact the channel.

4. Construction activities that may result in any disturbance to the stream should not be completed during critical spawning months; therefore no construction activities may occur from April 1 to July 31.

5. Work must be accomplished during a period of low flow. Sediment introduced into stream flows during construction must be controlled to prevent increases in turbidity downstream. Flows must be diverted away from the construction area using a non-erodible cofferdam or other means of bypass.

6. Impacts to the stream channel and surrounding environment must be minimized. Vegetation should not be destroyed, but if some disturbance is necessary, then revegetating with native species will be required, especially in the case of woody shrubs. The channel contours and configuration must not be changed except in the case of bank contouring for stabilization purposes.

7. Riprap must consist of only clean, properly sized angular rock, which must be keyed deeply into the streambed to prevent undercutting. A filter must be placed behind if necessary (i.e., if soils are fine grained, non-cohesive, and/or erodible). Demolition debris or refuse will not be allowed, nor material such as bricks, concrete, asphaltic material [either natural (tar sand, oil shale, etc.) or man-made].

8. Fill materials should be free of fines, waste, pollutants, and noxious weeds/seeds.

9. Equipment should work from the top of the bank or from the channel to minimize disturbance to the riparian area and to protect the banks. Heavy equipment should avoid crossing and/or disturbing wetlands.

10. Machinery must be properly cleaned and fueled offsite.

11. Best Management Practices should be implemented and maintained during any streamside or instream work to minimize sedimentation, temporary erosion of stream banks, and needless damage or alteration to the streambed.

12. Excavated material and construction debris may not be wasted in any stream channel or placed in flowing waters, this will include material such as grease, oil, joint coating, or any other possible pollutant. Excess materials must be wasted at an upland site well away from any channel. Construction materials, bedding material, excavated material, etc. may not be stockpiled in riparian or channel areas.

13. Approval of this application does not authorize trespass, easements, rights-of-way, or any other access and land use permits. It is the responsibility of the applicant to obtain any such authorizations as may be necessary for this proposal.

Your contact with the Division is Chuck Williamson, who can be reached at telephone number 801-538-7404.

This **ORDER** is subject to the provisions of UTAH ADMIN. CODE R. 655-6-17 of the Division of Water Rights and to UTAH CODE ANN. §§ 63G-4-302 and 73-3-14, which provide for persons or parties with legal standing to file either a Request for Reconsideration with the State Engineer or an appeal with the appropriate District Court. A Request for Reconsideration must be filed with the State Engineer within 20 days of the date of this **ORDER**. However, a Request for Reconsideration is not a prerequisite to filing a court appeal. A court appeal must be filed within 30 days after the date of this **ORDER**, or if a Request for Reconsideration has been filed, within 30 days after the date the Request for Reconsideration is denied. A Request for Reconsideration is considered denied when no action is taken within 20 days after the Request is filed.

Dated this 11th day of October, 2016.

David K. Marble, P.E.
Assistant State Engineer

Mailed a copy of the foregoing Order this 11th day of October, 2016, to:

UTAH DEPARTMENT OF TRANSPORTATION – REGION 4
210 WEST 800 SOUTH
RICHFIELD UT 84701

Corps of Engineers
Nathan Moses - Regional Engineer
Richard Clark - EPA
Rhett Boswell - Wildlife Resources
Kathy Holder - Utah Division of Emergency Management, kcholder@utah.gov
Bill James - Utah Division of Wildlife Resources

By: Tiffany Gonzales
Tiffany Gonzales
Secretary

Section 00555M

PROJECT # S-I15-1(113)5

PIN # 12780

APPENDIX C

Flood Plain Development Permit

COPY

St.George
THE BRIGHTER SIDE

Permit #: 8.4.160-16

FLOODPLAIN DEVELOPMENT PERMIT

PART 1 - *This section to be completed by applicant:*

Name: Utah Department of Transportation (UDOT) Date: 10/10/16
Address: 210 West 800 South
City/State/Zip: Richfield, UT 84701
Location of Proposed Development: I-15 and Virgin River
Engineer or Authorized Agent: Horrocks Engineers
Description of Development (more than one item may be applicable)

___	Residential	_X_	Addition or Improvement
___	Commercial	___	Subdivision
___	Mobile Home	___	Mobile Home Park
_X_	New Construction	___	Fill
___	Watercourse Alteration	___	Other

Applicant Signature: Todd Auerkamp Date: Oct 13, 2016

NOTE:

1. Applicant shall not initiate any development activities on the floodplain until this permit has been issued by the office of the City Engineer (designated Floodplain Administrator).

2. Information described below applicable to this application must accompany this form: Plans drawn to scale showing the nature, dimensions and elevations of the area in question; existing or proposed structures, fill, storage of materials, drainage facilities and the location of the foregoing. Specifically, the following information is required: (a) Mean Sea Level elevation; (b) Elevation to which structure is flood proofed; (c) A description of alterations to any watercourse.

3. Applicants may be required to furnish additional information as may be necessary for the City Engineer's office to evaluate the application.

4. This application and all correspondence shall be delivered to:

City of St. George - Engineering Services Division
Attn: Ken Bricker
175 East 200 North
St. George, Utah 84770
Phone: (435) 627-4125
Email:ken.bricker@sgcityorg

ADMINISTRATIVE ACTION

Part 2 - *This section to be completed by City:*

Permit Number: 8.4. 160 - 16 Fee Received: _____

The proposed development is located in the: ___ Floodway ✓ Flood Fringe

The Base Flood Elevation at the development site is: _____

Source documents: _____

Plan Review:
Elevation to which the lowest floor is to be constructed:
Elevation to which the structure is to be flood proofed:
Elevation to which compacted fill is to be elevated:

Action:

___ **Permit is Denied**. The proposed development is not in conformance with applicable floodplain management standards (explanation attached).

___ **Permit is Approved**. The plans and materials submitted in support of the proposed development are in compliance with applicable floodplain management standards.

___ **Conditional Approval is Granted**. The proposed development is in general conformance with applicable floodplain management standards with the following conditions (see attached)

14 OCT 16 Ken Bridge

Date Signature

STORMWATER ENGINEER

Title

✓ Applicant has been advised that the proposed development may require approval by:

✓ State Engineer (Stream Alteration Permit)
✓ Pre-Construction Notification (PCN)
___ Other

N/A Applicant has been advised that an Elevation Certificate is required and has been given an Elevation Certificate form.

N/A Applicant has been advised that a Flood Proofing Certification is required and has been given a Flood Proofing Certification form.

CONDITIONS OF APPROVAL

Part 3 - *This section to be completed by Engineering Services*:

Permit Number: 8.4. 160-16

1. This permit is issued in conjunction with Title 10, Chapter 23, *Construction Subject to Geologic, Flood, or other Natural Hazards*, of the St. George City Code. Nothing herein constitutes a waiver of any other City ordinance or Code requirements that may apply.
2. This permit is only for work that resides within the borders of the accompanying project information submitted.
3. Any and all work shall not decrease existing flood carrying capacity.
4. ~~No cut, fill or other encroachments into the floodway are permitted at this time.~~
5. It is the sole responsibility of the applicant to acquire any and all necessary City, State, and Federal approvals associated with this project work.
6. Where applicable, all work shall conform to the City of St. George Standard Specifications for Design and Construction.
7. Applicant, where applicable, should develop a restoration, erosion and maintenance plan to minimize existing problems for the future.
8. Applicant shall provide adequate professional inspection to insure the work is completed in compliance with this permit and to insure minimal disturbance to the flood plain.
9. Applicant shall provide a record of drawings that details the finished work.
10. Work shall be completed by one (1) year from permit date.
11. No disturbance of any kind shall be allowed beyond the boundary of this project and any existing or future disturbance outside the boundary of this project shall be restored to a near natural condition prior to approval of this permit.
12. Work shall be in compliance with the application, technical drawings, plans and specifications submitted for approval.

Notes:

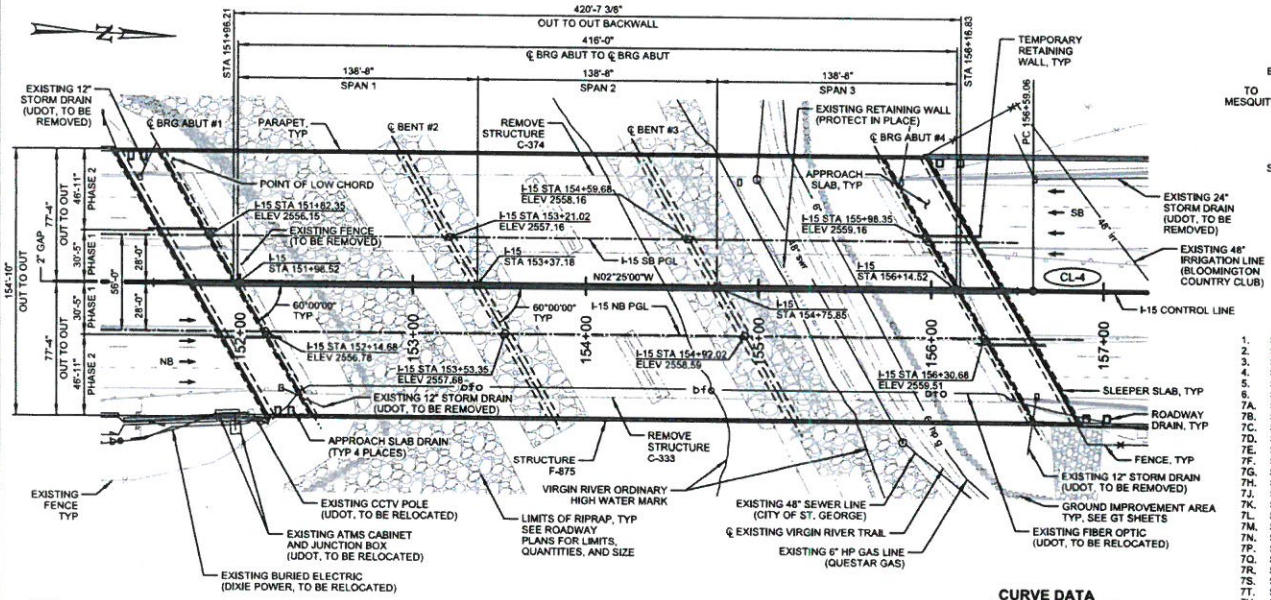

NOTE:
1. CENTER LINE OF ALL SUBSTRUCTURE COMPONENTS ARE PARALLEL TO N57°35'00"E.

PLAN

CURVE DATA

CURVE NUMBER CL-4
Δ = 02°21'25" RIGHT
R = 14100.00'
L = 580.02'
T = 290.05'
PI = STA 159+49.12
N = 997394.86
E = 532364.36
PC TO PI = N02°25'00"W

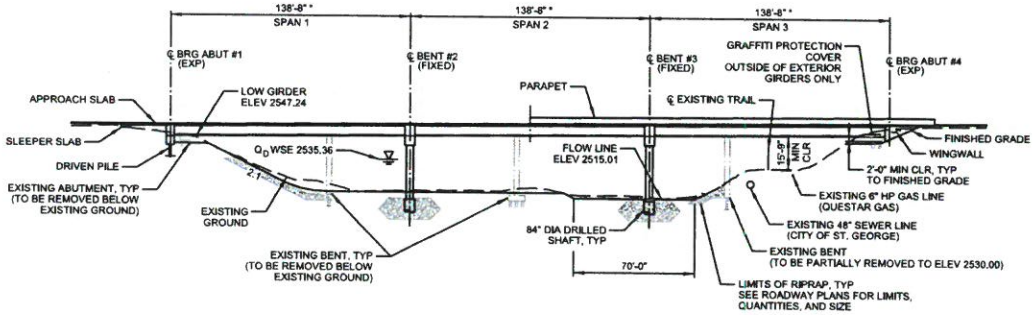

ELEVATION

NORMAL TO I-15 CONTROL LINE
* MEASURED ALONG I-15 CONTROL LINE

BRIDGE LOAD RATING		
	HL-93 (LRFR)	
	RATING	LOCATION
INV	1.12	SPAN 1 OR 3, 70.10', S, STR 1
OPER	1.41	SPAN 1 OR 3, 70.10', S, STR 1

F DENOTES RATING CONTROLLED BY FLEXURE
S DENOTES RATING CONTROLLED BY SHEAR
My AT 70.10' = 15727 K-FT
Vy AT 70.10' = 2405 KIPS

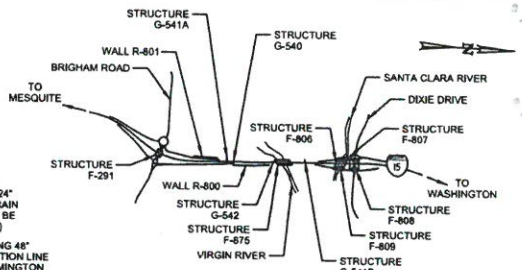

LOCATION PLAN

INDEX OF SHEETS

1. SITUATION AND LAYOUT 1 OF 6
2. SITUATION AND LAYOUT 2 OF 6
3. SITUATION AND LAYOUT 3 OF 6
4. SITUATION AND LAYOUT 4 OF 6
5. SITUATION AND LAYOUT 5 OF 6
6. SITUATION AND LAYOUT 6 OF 6
7A. SOIL DATA 1 OF 27
7B. SOIL DATA 2 OF 27
7C. SOIL DATA 3 OF 27
7D. SOIL DATA 4 OF 27
7E. SOIL DATA 5 OF 27
7F. SOIL DATA 6 OF 27
7G. SOIL DATA 7 OF 27
7H. SOIL DATA 8 OF 27
7J. SOIL DATA 9 OF 27
7K. SOIL DATA 10 OF 27
7L. SOIL DATA 11 OF 27
7M. SOIL DATA 12 OF 27
7N. SOIL DATA 13 OF 27
7P. SOIL DATA 14 OF 27
7Q. SOIL DATA 15 OF 27
7R. SOIL DATA 16 OF 27
7S. SOIL DATA 17 OF 27
7T. SOIL DATA 18 OF 27
7U. SOIL DATA 19 OF 27
7V. SOIL DATA 20 OF 27
7W. SOIL DATA 21 OF 27
7X. SOIL DATA 22 OF 27
7Y. SOIL DATA 23 OF 27
7Z. SOIL DATA 24 OF 27
7AA. SOIL DATA 25 OF 27
7AB. SOIL DATA 26 OF 27
7AC. SOIL DATA 27 OF 27
8. AS CONSTRUCTED DRILLED SHAFT AND PILE TIP ELEVATIONS
9. FOUNDATION PLAN
10. DRIVEN PILE DETAILS
11. DRILLED SHAFT DETAILS
12. ABUTMENT PLAN AND ELEVATION
13. ABUTMENT DETAILS 1 OF 2
14. ABUTMENT DETAILS 2 OF 2
15. WINGWALL DETAILS
16. BENT PLAN AND ELEVATION
17. BENT DETAILS 1 OF 2
18. BENT DETAILS 2 OF 2
19. UBT82 GIRDER DETAILS
20. GRAFFITI COVER AND ABUTMENT BEARING DETAILS
21. BENT BEARING DETAILS
22. INTERMEDIATE DIAPHRAGM DETAILS FOR PRESTRESSED GIRDERS
23. HALF DEPTH PANEL PLAN
24. PRECAST CONCRETE DECK PANEL - HALF DEPTH DETAILS 1 OF 2
25. PRECAST CONCRETE DECK PANEL - HALF DEPTH DETAILS 2 OF 2
26. FRAMING PLAN 1 OF 3
27. FRAMING PLAN 2 OF 3
28. FRAMING PLAN 3 OF 3
29. SCREED ELEVATIONS 1 OF 2
30. SCREED ELEVATIONS 2 OF 2
31. DECK PLAN 1 OF 2
32. DECK PLAN 2 OF 2
33. DECK SECTIONS 1 OF 3
34. DECK SECTIONS 2 OF 3
35. DECK SECTIONS 3 OF 3
36. APPROACH SLAB PLAN AT I-15 NB ABUT #1
37. APPROACH SLAB PLAN AT I-15 NB ABUT #4
38. APPROACH SLAB PLAN AT I-15 SB ABUT #1
39. APPROACH SLAB PLAN AT I-15 SB ABUT #4
40. APPROACH SLAB DETAILS
41. APPROACH SLAB DRAIN DETAILS
42. EXPANSION JOINT DETAILS
43. 42-INCH SINGLE SLOPE PARAPET
44. 54-INCH SINGLE SLOPE PARAPET
45. PARAPET END DETAILS
46. ELECTRICAL DETAILS 1 OF 2
47. ELECTRICAL DETAILS 2 OF 2
48. AESTHETIC DETAILS
49. REINFORCING STEEL SCHEDULE 1 OF 2
50. REINFORCING STEEL SCHEDULE 2 OF 2

GENERAL NOTES

SEE "SITUATION AND LAYOUT 2 OF 6" FOR THE GENERAL NOTES.

DESIGN DATA

SEE "SITUATION AND LAYOUT 2 OF 6" FOR THE DESIGN DATA.

FOR INFORMATION ONLY

C-333 SHEETS 1-26
C-374 SHEETS 1-14

QUANTITIES			
ITEM	EST	UNIT	AS CONST
GRANULAR BACKFILL BORROW (PLAN QUANTITY)	870	CU YD	
FREE DRAINING GRANULAR BACKFILL (PLAN QUANTITY)	330	CU YD	
REMOVE BRIDGE	2	EACH	
TEMPORARY RETAINING WALL	1	LUMP	
PILE DRIVING EQUIPMENT	1	LUMP	
DRIVEN PILES HP 14x117	5055	FT	
DRILLED SHAFTS, 84 INCH	880	FT	
REINFORCING STEEL - COATED (PLAN QUANTITY)	1038467	LB	
STRUCTURAL CONCRETE (EST LUMP QTY: 4387.8 CU YD)	1	LUMP	
PRECAST CONCRETE DECK PANEL	31200	SQ FT	
THIN BONDED POLYMER OVERLAY, TYPE I	70123	SQ FT	
PRESTRESSED CONCRETE MEMBER 138 FT 2 INCH TYPE UBT82	42	EACH	
EXPANSION JOINT	358	FT	
CONCRETE COATING	1	LUMP	
ELECTRICAL WORK BRIDGES	1	LUMP	

PRELIMINARY - NOT FOR CONSTRUCTION
PS&E SUBMITTAL - 09/15/2016

DESIGN JHO 06/16 CHECK RSH 09/16
DRAWN LM 09/16 CHECK RSH 09/16
APPROVAL RECOMM MARDOYY DATE
APPROVED FOR USE BY UDOT MARDOYY DATE

UTAH DEPARTMENT OF TRANSPORTATION
STRUCTURES DIVISION
HORROCKS ENGINEERS

I-15; BRIGHAM ROAD TO DIXIE DRIVE
I-15 OVER VIRGIN RIVER
SITUATION AND LAYOUT 1 OF 6
PROJECT NUMBER S-I15-1(113)5 PIN 12780

WASHINGTON
COUNTY
F-875
STRUCTURE NUMBER
F-875
DRAWING NUMBER
SHEET 1 OF 50

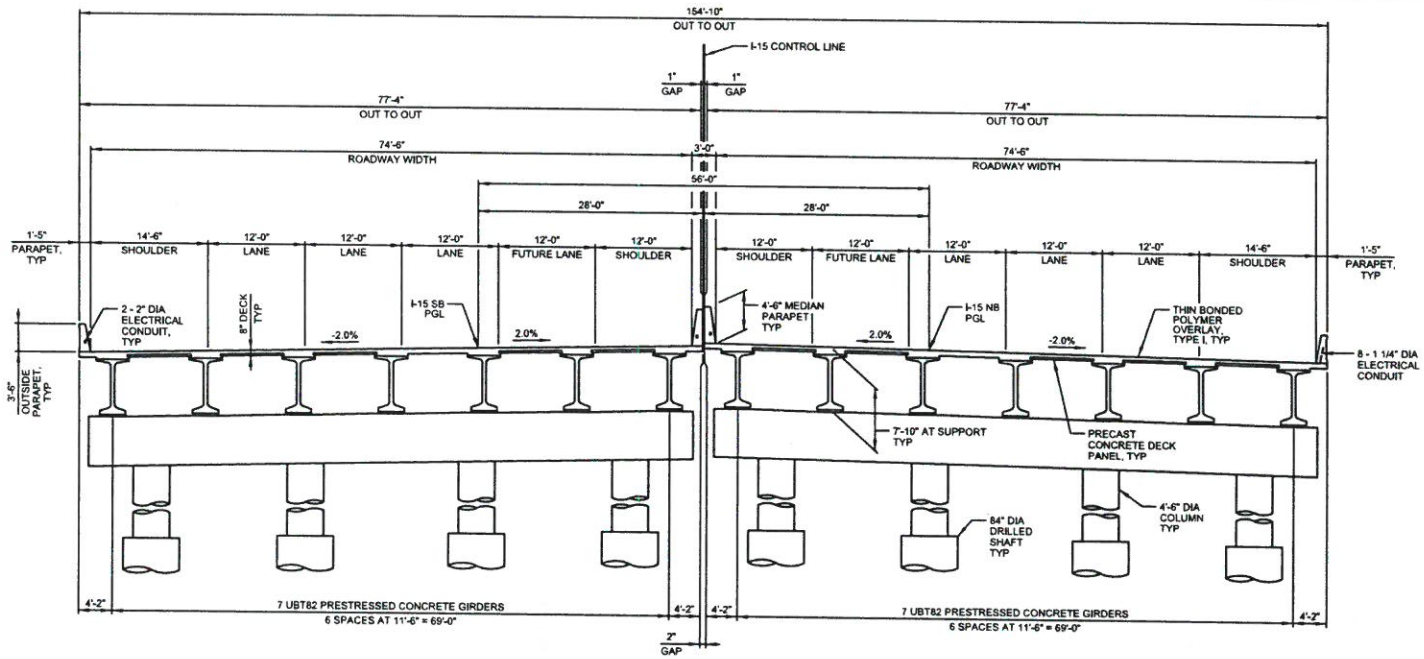

SECTION THROUGH STRUCTURE

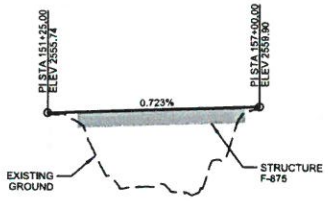

I-15 SB PROFILE

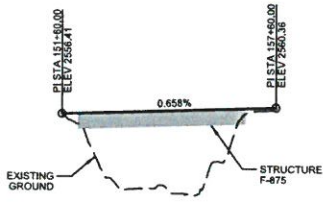

I-15 NB PROFILE

DESIGN DATA

HL-93 LOADING IN ACCORDANCE WITH AASHTO LRFD BRIDGE DESIGN SPECIFICATIONS, 7TH EDITION 2014 INCLUDING INTERIMS THROUGH 2016, AND THE UDOT STRUCTURES DESIGN AND DETAILING MANUAL, 2015. SEISMIC DESIGN IN ACCORDANCE WITH AASHTO GUIDE SPECIFICATIONS FOR LRFD SEISMIC BRIDGE DESIGN, 2ND EDITION 2011 INCLUDING INTERIMS THROUGH 2015. LOAD RATING IN ACCORDANCE WITH THE MANUAL FOR BRIDGE EVALUATION, SECOND EDITION 2011, WITH 2013 INTERIMS AND THE UDOT BRIDGE MANAGEMENT MANUAL, 2014.

CAST-IN-PLACE CONCRETE:	f'c = 4.0 KSI	n = 8	CLASS AA (AE) fy (REINF) = 60 KSI
PRESTRESSED GIRDER CONCRETE:	f'c = 10.0 KSI	f'ci = 7.5 KSI	CLASS AA (AE) fy (REINF) = 60 KSI
PRECAST DECK PANEL CONCRETE:	f'c = 6.0 KSI	f'ci = 4.5 KSI	CLASS AA (AE) fy (REINF) = 60 KSI
PRESTRESSED STRAND:	0.600" DIA GRADE 270 LOW RELAXATION STRAND (GIRDER) 0.375" DIA GRADE 270 LOW RELAXATION STRAND (PANELS)		
STRUCTURAL STEEL:	Fy = 36 KSI (GRADE 36)		
SACRIFICIAL WEARING SURFACE:	1/2" CONCRETE		
FUTURE WEARING SURFACE:	40 PSF		
DESIGN SPEED:	70 MPH I-15		
SEISMIC:	3% PROBABILITY OF EXCEEDANCE IN 75 YR DESIGN EVENT (SITE SPECIFIC) A = 0.329g, S = 0.571g, S = 0.416g 7% PROBABILITY OF EXCEEDANCE IN 75 YR DESIGN EVENT (SITE SPECIFIC) A = 0.252g, S = 0.558g, S = 0.223g SITE CLASS F, SDC D BRIDGE CLASSIFICATION - ESSENTIAL		
TRAFFIC DATA:	I-15 NORTHBOUND 2040 AADT = 45,000		2014 AADT = 21,600
	I-15 SOUTHBOUND 2040 AADT = 46,800		2014 AADT = 22,500
PARAPET TEST LEVEL:	TL-4		

GENERAL NOTES

1. USE COATED DEFORMED CARBON STEEL BARS CONFORMING TO AASHTO M111 OR ASTM A775 AND AASHTO M31 GRADE 60, RESPECTIVELY. USE COATED DEFORMED CARBON STEEL BARS CONFORMING TO ASTM A706 GRADE 60 IN CONCRETE COLUMNS.
2. USE STRUCTURAL STEEL CONFORMING TO AASHTO M270 GRADE 36 EXCEPT WHERE NOTED OTHERWISE.
3. CHAMFER ALL EXPOSED CONCRETE CORNERS 3/4 INCH EXCEPT WHERE NOTED OTHERWISE.
4. PROVIDE 2 INCH MINIMUM CONCRETE COVER TO REINFORCING STEEL EXCEPT WHERE NOTED OTHERWISE.
5. USE NORMAL-WEIGHT CLASS AA(AE) CAST-IN-PLACE CONCRETE EXCEPT WHERE NOTED OTHERWISE.
6. VERIFY UTILITY LOCATIONS BEFORE CONSTRUCTION. PROTECT EXISTING UTILITIES IN PLACE UNLESS NOTED OTHERWISE.
7. COAT OR GALVANIZE ALL MISCELLANEOUS STEEL PLACED IN STRUCTURAL CONCRETE. UNLESS NOTED OTHERWISE.
8. DO NOT SCALE DRAWINGS. HORIZONTAL DIMENSIONS ARE PLAN. VERTICAL DIMENSIONS ARE PLUMB.
9. USE TYPE V CEMENT (HIGH SULFATE RESISTANCE).

HYDRAULIC DATA

DRAINAGE AREA	3853 SQ MI
FLOWLINE ELEV AT APPROACH SECTION	2515.01 FT
FLOWLINE ELEV AT BRIDGE SECTION	2515.01 FT
DESIGN FREQUENCY	100 YR
DESIGN DISCHARGE (Qd)	23500 CFS
UNCONSTRICTED WSEL AT APPROACH SECTION (Qd)	2534.36 FT
CONSTRICTED WSEL AT APPROACH SECTION (Qd)	2534.36 FT
WSEL AT UPSTREAM FACE OF BRIDGE SECTION (Qd)	2534.36 FT
VELOCITY THROUGH BRIDGE SECTION (Qd)	7.61 FPS
100 YR DISCHARGE (Q100)	23500 CFS
UNCONSTRICTED WSEL AT APPROACH SECTION (Q100)	2534.36 FT
CONSTRICTED WSEL AT APPROACH SECTION (Q100)	2534.36 FT
WSEL AT UPSTREAM FACE OF BRIDGE SECTION (Q100)	2534.36 FT
VELOCITY THROUGH BRIDGE SECTION (Q100)	7.61 FPS
DEPTH OF CONTRACTION SCOUR (Q100)	0 FT
TOTAL SCOUR DEPTH AT LEFT ABUTMENT (Q100)	0 FT
TOTAL SCOUR DEPTH AT RIGHT ABUTMENT (Q100)	0 FT
TOTAL SCOUR DEPTH AT BENTS (Q100)	18 FT
500 YR DISCHARGE (Q500)	64000 CFS
UNCONSTRICTED WSEL AT APPROACH SECTION (Q500)	2541.36 FT
CONSTRICTED WSEL AT APPROACH SECTION (Q500)	2541.36 FT
WSEL AT UPSTREAM FACE OF BRIDGE SECTION (Q500)	2541.36 FT
DEPTH OF CONTRACTION SCOUR (Q500)	4 FT
TOTAL SCOUR DEPTH AT LEFT ABUTMENT (Q500)	0 FT
TOTAL SCOUR DEPTH AT RIGHT ABUTMENT (Q500)	0 FT
TOTAL SCOUR DEPTH AT BENTS (Q500)	23 FT

PRELIMINARY - NOT FOR CONSTRUCTION
PS&E SUBMITTAL - 09/15/2016

DESIGN JHO 06/16 CHECK RSH 09/16
DRAWN LM 06/16 CHECK RSH 09/16

UTAH DEPARTMENT OF TRANSPORTATION
STRUCTURES DIVISION
HORROCKS ENGINEERS

I-15; BRIGHAM ROAD TO DIXIE DRIVE
I-15 OVER VIRGIN RIVER
SITUATION AND LAYOUT 2 OF 6

PROJECT NUMBER S-I15-1(113)5 PIN 12780

WASHINGTON
COUNTY

F-875
STRUCTURE NUMBER

F-875
DRAWING NUMBER

SHEET 2 OF 50

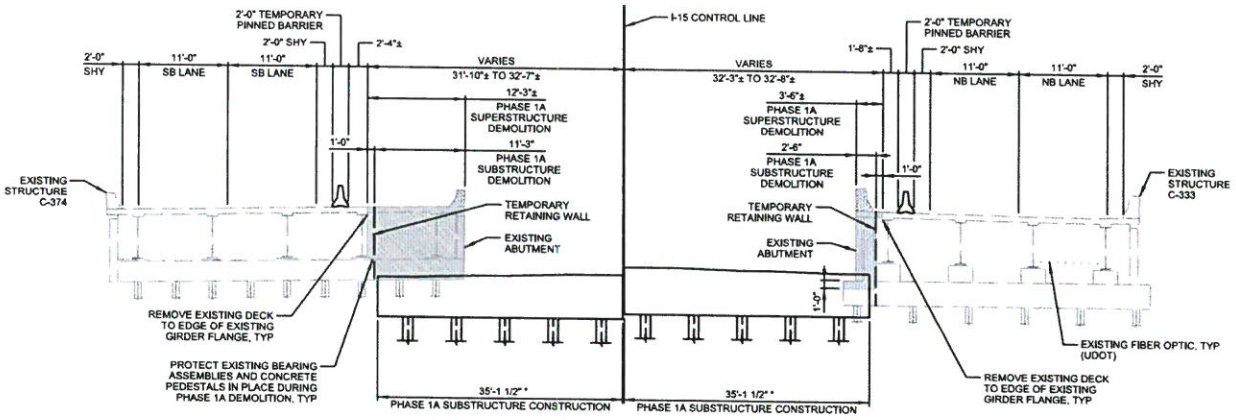

TYPICAL SECTION PHASE 1A AT ABUTMENTS

* MEASURED ALONG ℄ ABUTMENT

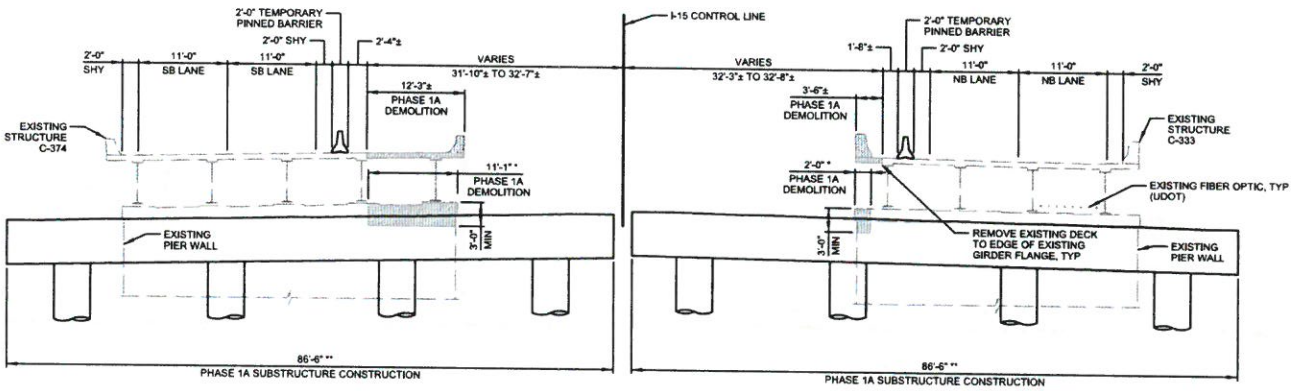

TYPICAL SECTION PHASE 1A AT BENTS

* MEASURED ALONG EXISTING BENT
** MEASURED ALONG ℄ BENT

PRELIMINARY - NOT FOR CONSTRUCTION
PS&E SUBMITTAL - 09/15/2016

APPROVAL RECOMM: MAJ/DDIV/ DATE
APPROVED FOR PUBLIC ADVERTISE BY UDOT: MAJ/DDIV/ DATE

DESIGN: JHO 06/16 CHECK: RSH 09/16
DRAWN: LM 06/16 CHECK: RSH 09/16

UTAH DEPARTMENT OF TRANSPORTATION
STRUCTURES DIVISION
HORROCKS ENGINEERS

I-15; BRIGHAM ROAD TO DIXIE DRIVE
I-15 OVER VIRGIN RIVER
SITUATION AND LAYOUT 3 OF 6
PROJECT NUMBER S-I15-1(113)5 PIN 12780

WASHINGTON COUNTY
F-875 STRUCTURE NUMBER
F-875 DRAWING NUMBER
SHEET 3 OF 50

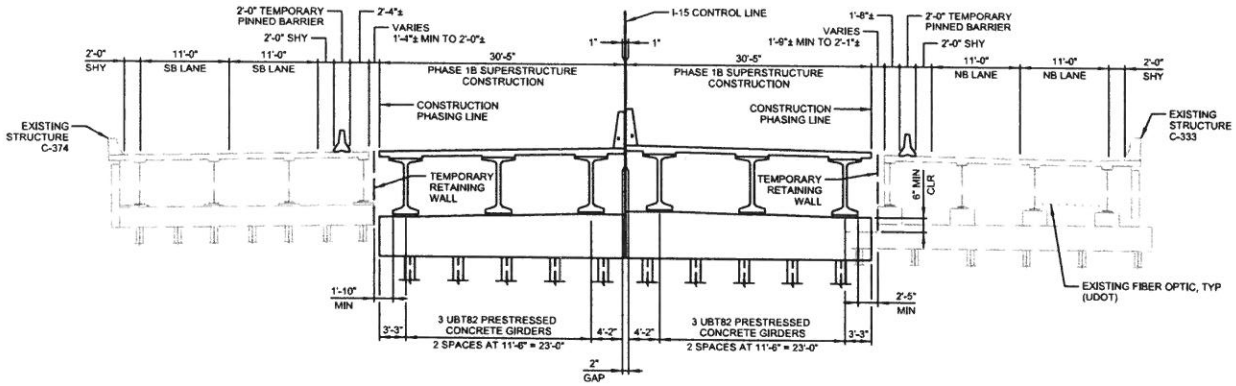

TYPICAL SECTION PHASE 1B AT ABUTMENTS

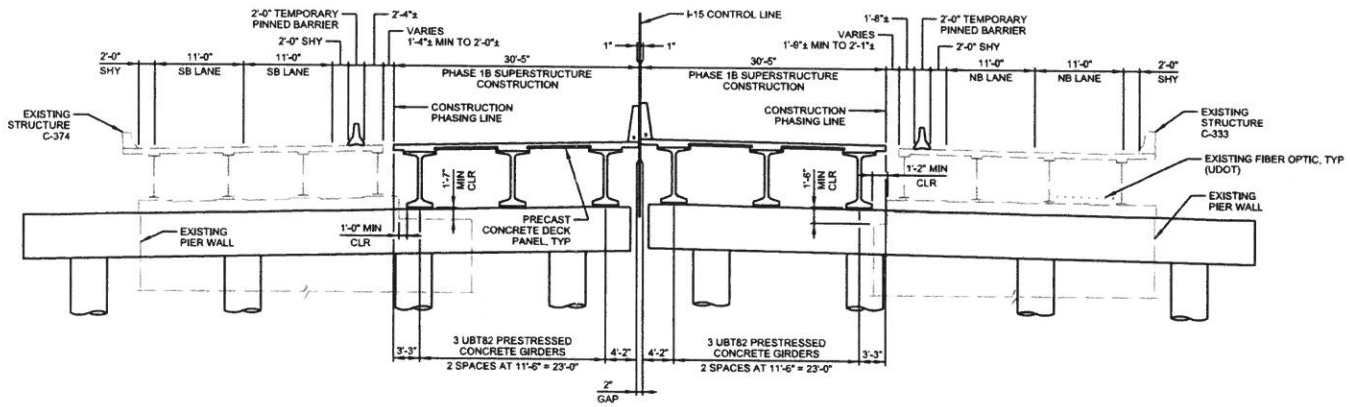

TYPICAL SECTION PHASE 1B AT BENTS

PRELIMINARY - NOT FOR CONSTRUCTION
PS&E SUBMITTAL - 09/15/2016

DESIGN JHO 06/16 CHECK RSH 09/16
DRAWN LM 06/16 CHECK RSH 09/16

APPROVAL RECOMM MM/DD/YY DATE
APPROVED FOR USE BY UDOT MM/DD/YY DATE

UTAH DEPARTMENT OF TRANSPORTATION
STRUCTURES DIVISION
HORROCKS ENGINEERS

I-15; BRIGHAM ROAD TO DIXIE DRIVE
I-15 OVER VIRGIN RIVER
SITUATION AND LAYOUT 4 OF 6

PROJECT NUMBER S-I15-1(113)5 PIN 12780

WASHINGTON
COUNTY

F-875
STRUCTURE NUMBER

F-875
DRAWING NUMBER

SHEET 4 OF 50

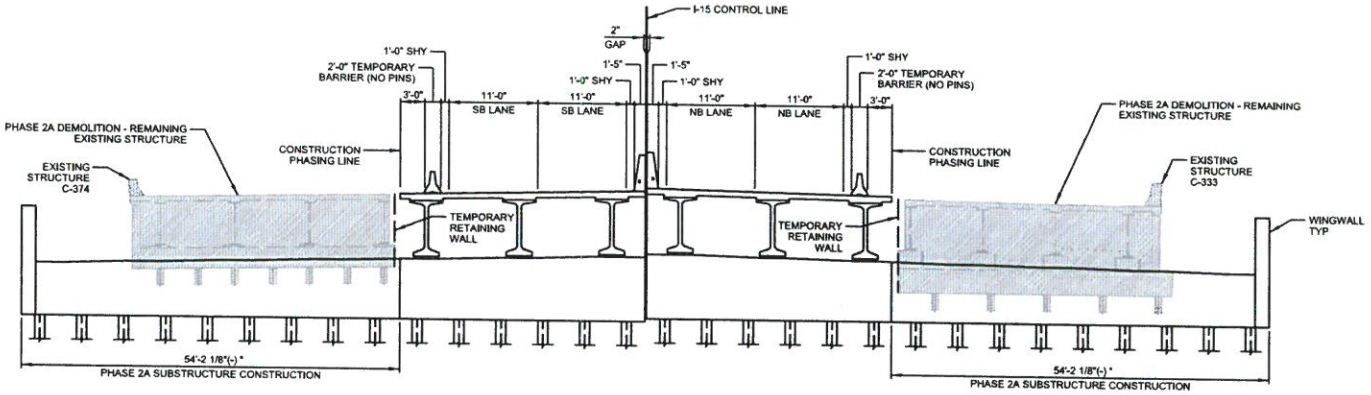

TYPICAL SECTION PHASE 2A AT ABUTMENTS

* MEASURED ALONG ℄ ABUT

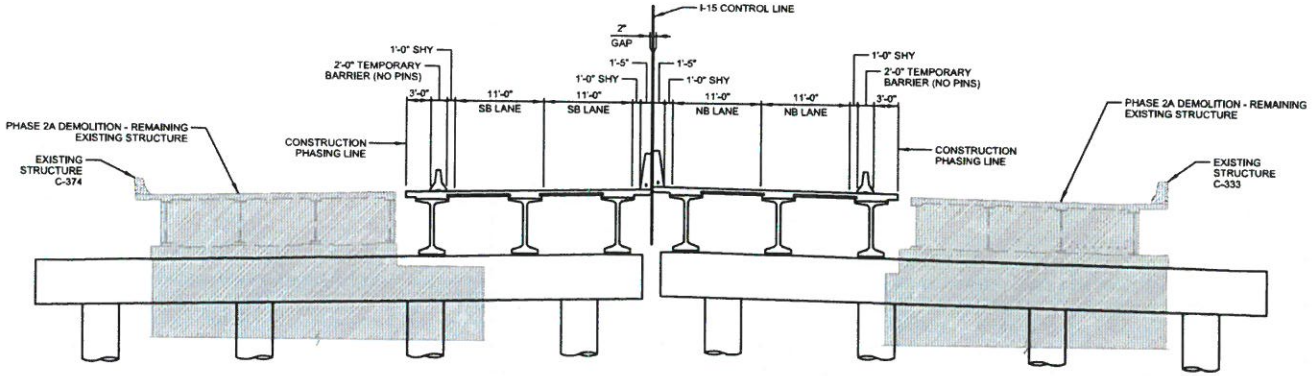

TYPICAL SECTION PHASE 2A AT BENTS

PRELIMINARY - NOT FOR CONSTRUCTION
PS&E SUBMITTAL - 09/15/2016

APPROVAL RECOMM: MMOODY DATE
APPROVED FOR USE BY UDOT: MMOODY DATE

DESIGN JHO 06/16 CHECK RSH 09/16
DRAWN LM 06/16 CHECK RSH 09/16

UTAH DEPARTMENT OF TRANSPORTATION
STRUCTURES DIVISION
HORROCKS ENGINEERS

I-15; BRIGHAM ROAD TO DIXIE DRIVE
I-15 OVER VIRGIN RIVER
SITUATION AND LAYOUT 5 OF 6

PROJECT NUMBER S-I15-1(113)5 PIN 12780

WASHINGTON
COUNTY
F-875
STRUCTURE NUMBER
F-875
DRAWING NUMBER
SHEET 5 OF 50

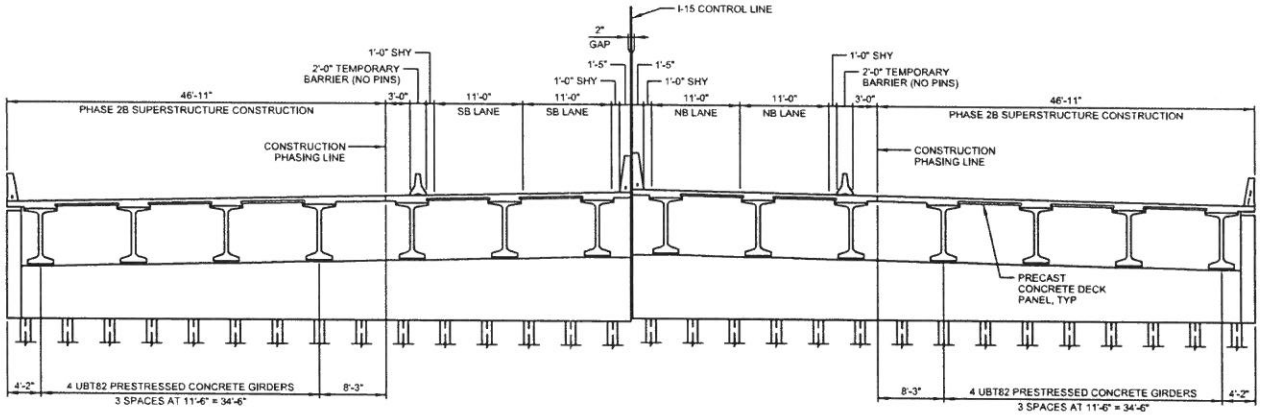

TYPICAL SECTION PHASE 2B AT ABUTMENTS

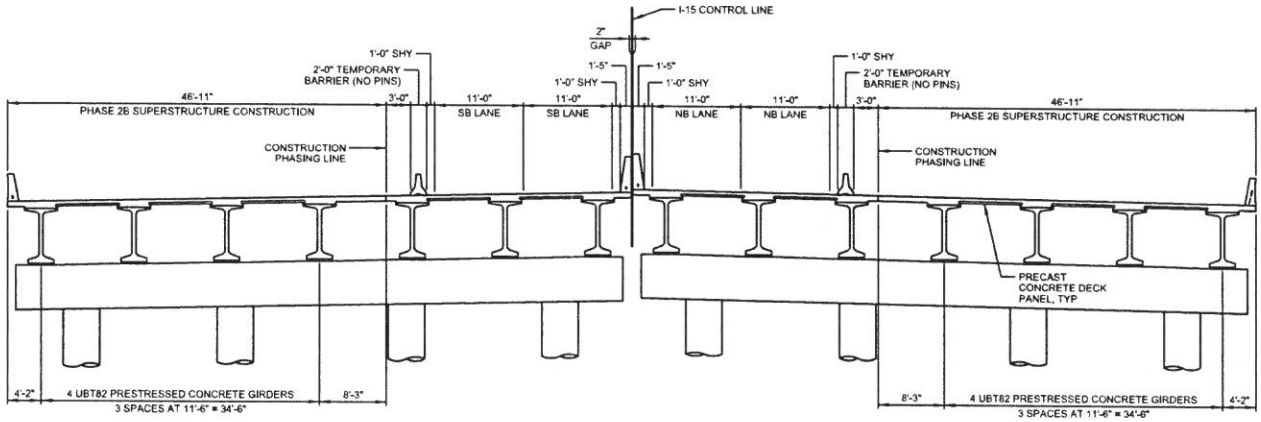

TYPICAL SECTION PHASE 2B AT BENTS

PRELIMINARY - NOT FOR CONSTRUCTION
PS&E SUBMITTAL - 09/15/2016

APPROVAL RECOMM. MMDDYY DATE
APPROVED BY/FOR MMDDYY DATE
DESIGN JHO 06/16 CHECK RSH 09/16
DRAWN LM 06/16 CHECK RSH 09/16

UTAH DEPARTMENT OF TRANSPORTATION
STRUCTURES DIVISION
HORROCKS ENGINEERS

I-15; BRIGHAM ROAD TO DIXIE DRIVE
I-15 OVER VIRGIN RIVER
SITUATION AND LAYOUT 6 OF 6
PROJECT NUMBER S-I15-1(113)5 PIN 12780

WASHINGTON
COUNTY
F-875
STRUCTURE NUMBER
F-875
DRAWING NUMBER
SHEET 6 OF 50

I-15; Brigham Road to Dixie Drive

Virgin River Hydraulics Report
October 2016

WASHINGTON COUNTY, ID
PROJECT NUMBER: S-I15-1(113)5
PIN: 12780

PREPARED FOR:
UTAH DEPARTMENT OF TRANSPORTATION (UDOT)

PREPARED BY:
HORROCKS ENGINEERS

TABLE OF CONTENTS

1 Introduction 3
1.1 Purpose 3
1.2 Location 3
2 Existing Conditions 4
2.1 Existing Bridges 4
3 Hydrology 6
3.1 FEMA FIS Flow rate 6
4 Hydraulics 6
4.1 Hydraulic Model 6
4.2 Model Geometry 6
4.3 Model Boundary Conditions 7
4.4 Bridge Skew 7
4.5 Manning's n Values 7
4.6 Model of Proposed Bridge 8
4.7 Proposed Scour 8
4.8 Proposed Scour Mitigation 9
4.9 Conclusion 9
Appendix (HEC-RAS Output Data) 10

Figures

Figure 1 – Vicinity Map 3
Figure 2 – Existing I-15 Bridges over Virgin River (August 2016) 4
Figure 3 – On West Bridge Looking Downstream (Looking Southwest), June 2016 5
Figure 4 – On East Bridge Looking Upstream (Looking Northeast), June 2016 5

Tables

Table 1 – FEMA Design Flow Rates 6
Table 2 – Comparison of Corrected Effective Model and Duplicate Effective Model WSEs 7
Table 3 – Comparison of Proposed Conditions Model and Corrected Effective Model WSEs 8
Table 4 – Proposed Bridge Estimated Scour Depths 9

1 INTRODUCTION

1.1 PURPOSE

This report documents the hydraulic analysis for the proposed replacement of the existing I-15 bridges over the Virgin River in Washington County, Utah. The existing bridges are being replaced to accommodate the extra roadway width needed for additional traffic lanes. This report provides information to understand the basis for the analysis and the performance of the hydraulic elements of the existing and proposed bridges.

1.2 LOCATION

The project is at the intersection of I-15 and the Virgin River in St George. Refer to Figure 1 for a location map of the project area.

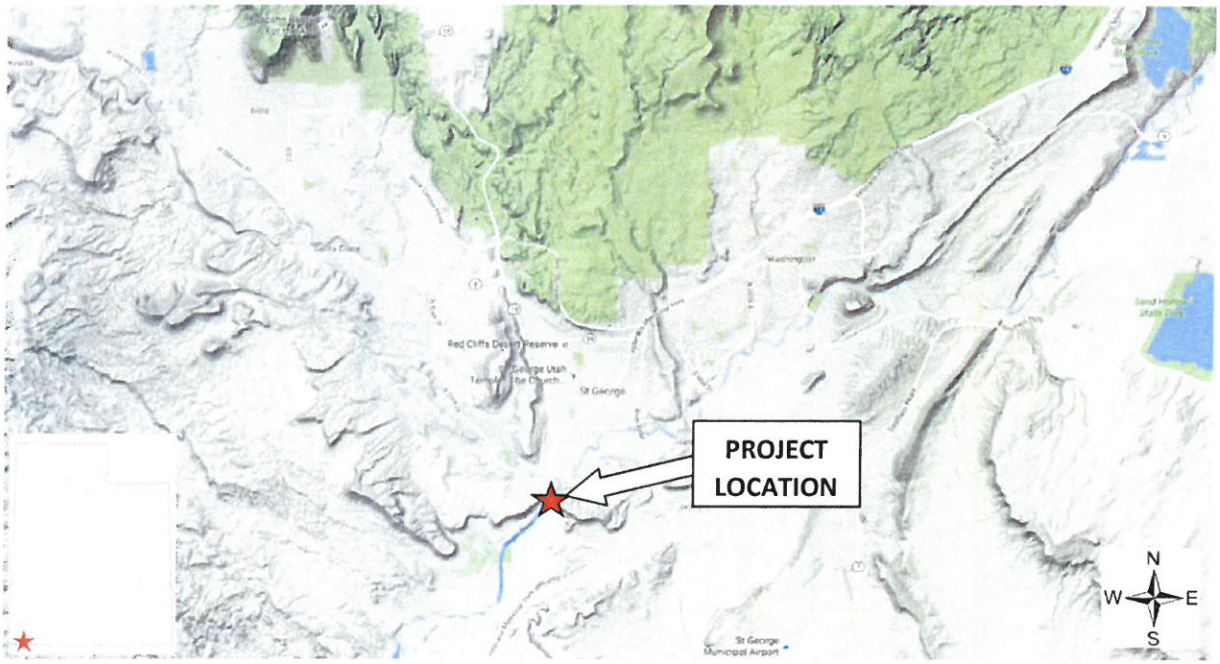

Figure 1 – Vicinity Map

2 EXISTING CONDITIONS

2.1 EXISTING BRIDGES

The existing bridges were constructed in the early 1960s. Hydraulically, the existing bridge has performed well in handling peak flows over the last 50+ years. See Figure 2 through Figure 4 for pictures of the pre-project bridges and the Virgin River channel.

Figure 2 – Existing I-15 Bridges over Virgin River (August 2016)

Figure 3 – On West Bridge Looking Downstream (Looking Southwest), June 2016

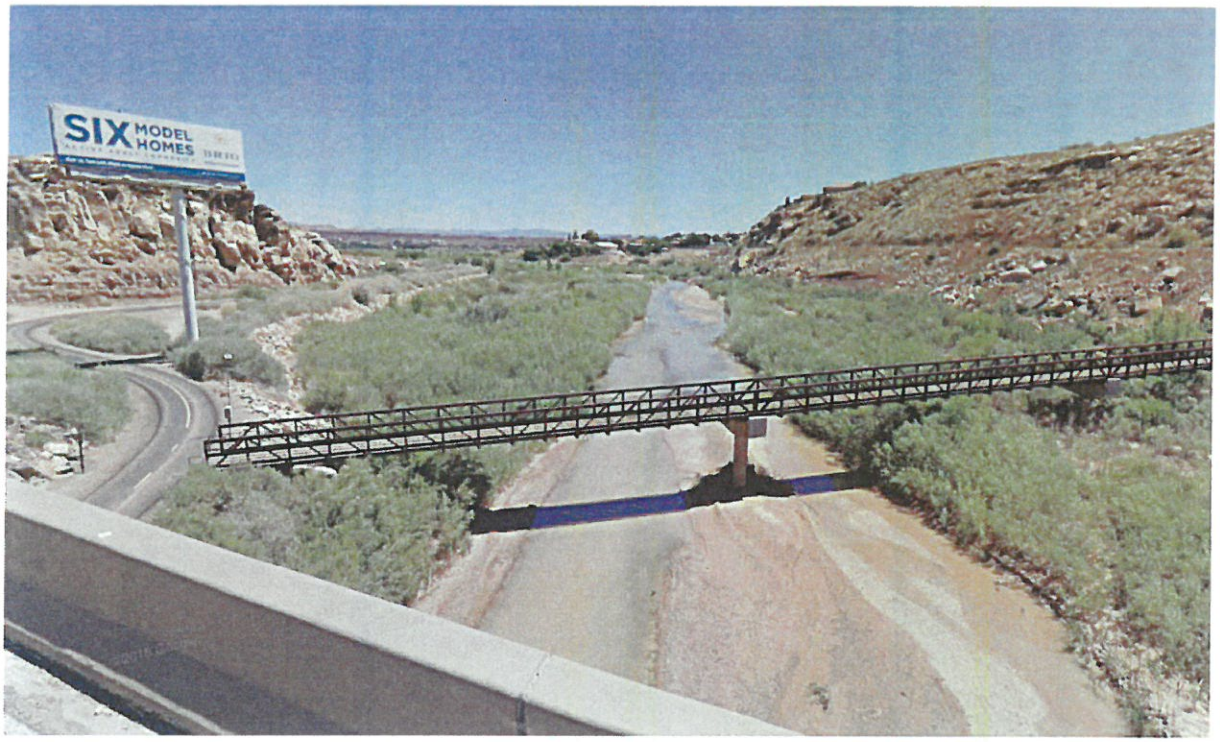

Figure 4 – On East Bridge Looking Upstream (Looking Northeast), June 2016

3 HYDROLOGY

3.1 FEMA FIS FLOW RATE

A Federal Emergency Management Agency (FEMA) Flood Insurance Study (FIS) with an effective date of April 2, 2009 exists for Washington County. A FEMA Flood Insurance Rate Map (FIRM) with the same effective date also exists which correlates with the FIS.

Table 1 shows the summary of the design flow rates. These values were used for the project design elements and no other hydrologic analysis was conducted as part of this project.

Table 1 – FEMA Design Flow Rates

Return Period (year)	Flow Rate (cfs)
10	12,000
50	19,500
100	27,500
500	64,000

4 HYDRAULICS

4.1 HYDRAULIC MODEL

The hydraulic model used to create the profiles in the FIS was last modified on August 31, 2006. The FEMA hydraulic model, created using HEC-RAS, is a one-dimensional, steady state, model of the bridge and upstream and downstream channel.

The existing FEMA model was obtained electronically and was run, unedited, by Horrocks Engineers using HEC-RAS version 4.1.0 to create a duplicate effective hydraulic model. The duplicate effective model was then edited to create a corrected effective model. This model accounts for more recent survey information in the vicinity of the bridge. It also adjusts cross section locations just upstream and downstream of both the I-15 bridges and upstream pedestrian bridge. The proposed conditions model was created to analyze the proposed bridge geometry. The proposed conditions model was compared to the corrected effective model to evaluate any change in water surface elevations (WSE).

4.2 MODEL GEOMETRY

Throughout the entire model extents, the Virgin River channel geometry used in the corrected effective model and proposed conditions model is identical to that used in the duplicate effective model except in cross-sections AD through AP where the channel geometry was updated with more recent survey data that was obtained in the spring and summer of 2016. Due to the changes in cross-sectional geometry in cross-sections AD through AP, the WSEs of the corrected effective model differ from those in the duplicate effective model, but they match within 0.5 vertical feet in the 100-year event at the upstream and downstream extents of the cross-section geometry modifications (cross-sections AD and AP). Table 2 show the summary of the difference in 100-year WSEs.

Table 2 – Comparison of Corrected Effective Model and Duplicate Effective Model WSEs

FEMA Lettered Cross-Section ID	100-Year Water Surface Elevation		
	Duplicate Effective Model	Corrected Effective Model	Difference (feet)
*AC	2525.34	2525.34	0.00
AD	2526.01	2525.95	-0.06
AE	2526.57	2525.85	-0.72
AF	2527.66	2527.45	-0.21
AG	2528.15	2527.98	-0.17
AH	2531.51	2531.65	0.14
AI	2529.16	2529.20	0.04
AJ	2535.09	2535.58	0.49
AK	2535.30	2536.40	1.10
AL	2537.40	2537.59	0.19
AM	2539.26	2538.70	-0.56
AN	2540.78	2540.00	-0.78
AO	2542.10	2541.00	-1.10
AP	2542.52	2542.10	-0.42
*AQ	2542.87	2543.02	0.15
*AR	2543.43	2543.55	0.12
*AS	2546.53	2546.55	0.02
*AT	2549.05	2549.05	0.00

*Cross-sections unchanged from duplicate effective model

4.3 Model Boundary Conditions

Downstream boundary conditions were set to normal depth for the duplicate effective (FEMA) model. This approach was also taken for the corrected effective model and the proposed conditions model.

4.4 Bridge Skew

The existing I-15 bridges and the upstream pedestrian bridge both appear to be skewed to the direction of flow in the Virgin River. The duplicate effective model did not account for a skew angle at the cross-sections upstream and downstream of these bridges. The corrected effective model and the proposed conditions model use skew angles of 20 degrees for the I-15 bridges and 26 degrees for the pedestrian bridge cross-sections. These angles were approximated from the bridge face to the anticipated flow direction angle based on current channel geometry.

4.5 Manning's n Values

Manning's n values for the corrected effective model and proposed conditions model are identical to those used in the duplicate effective model except in cross-section AD through AP where the cross-

sectional geometry has been modified. In this stretch, the station limits of the Manning's n values were updated based on information obtained from recent site visits and aerial photography.

4.6 Model of Proposed Bridge

The proposed bridge will be slightly longer and have a similar low chord to the existing bridge and will have 2 rows of 8 unconnected 5-foot diameter round piers instead of 3 rows of 2-foot wide continuous piers. The proposed conditions model shows no rise in WSE when compared to the corrected effective model. Table 3 shows a comparison of water surface elevations between the corrected effective model and proposed conditions model.

Table 3 – Comparison of Proposed Conditions Model and Corrected Effective Model WSEs

FEMA Lettered Cross-Section ID	100-Year Water Surface Elevation		
	Corrected Effective Model	Proposed Conditions Model	Difference (feet)
*AC	2525.34	2525.34	0.00
AD	2525.95	2525.95	0.00
AE	2525.85	2525.85	0.00
AF	2527.45	2527.45	0.00
AG	2527.98	2527.98	0.00
AH	2531.65	2531.65	0.00
AI	2529.20	2529.20	0.00
AJ	2535.58	2535.44	-0.14
AK	2536.40	2536.28	-0.12
AL	2537.59	2537.50	-0.09
AM	2538.70	2538.63	-0.07
AN	2540.00	2539.97	-0.03
AO	2541.00	2540.98	-0.02
AP	2542.10	2542.09	-0.01
*AQ	2543.02	2543.02	0.00
*AR	2543.55	2543.55	0.00
*AS	2546.55	2546.55	0.00
*AT	2549.05	2549.05	0.00

*Cross-sections unchanged from duplicate effective model

4.7 Proposed Scour

Contraction scour, pier scour and abutment scour for the proposed bridge were estimated using HEC-18 methodology within the HEC-RAS software. For this report, 2 mm is conservatively assumed as the D50 and will be used for all scour calculations. Two rows eight unconnected 5-foot diameter round piers was used in conjunction with the CSU equation for pier scour calculations. The proposed piers are intended to be lined up parallel to high flows in the channel, but are modeled to be skewed 10 degrees to account

for potential flow path variations. No reduction for pier scour depth was applied in any pier scour calculations (K4 is assumed to be 1). The HIRE equation was used for abutment scour calculations. Various scour depth estimates calculated in HEC-RAS are in Table 4.

Table 4 – Proposed Bridge Estimated Scour Depths

HEC-RAS Calculated 100-Year Scour Depths			
Storm Event	Contraction	Pier (CSU)	Abutment (HIRE)
100-Year	0 ft	18 ft	0 ft
500-Year	4 ft (South Side), 2 ft (North Side), 0 ft (Main Channel)	23 ft	0 ft

4.8 Proposed Scour Mitigation

The AASHTO LRFD Bridge Design Specifications, 7th edition, 2014, requires pier and abutment foundations on new bridges to be designed based on the total scour depths (including contraction and local (pier and abutment) scour). Scour countermeasures, including riprap, do not change the design procedures and is not taken into account in the proposed conditions model. However, using riprap along both abutments and the center piers will help to reduce the maintenance required in the channel due to erosion. The proposed riprap layout details are in the roadway design plans.

See Appendix for the HEC-RAS output files including scour calculations, and a figure of the scour depths

4.9 Conclusion

The existing I-15 bridges over the Virgin River in St George are being replaced with new bridges. The proposed bridges will be slightly longer and wider and have a similar low chord to the existing bridges and will have 2 rows of 8 unconnected 5-foot diameter round piers instead of 3 rows of 2-foot wide continues piers. The proposed conditions model shows no-rise in WSE when compared to the corrected effective model.

The low chord of the proposed bridge will have at least 10 feet of freeboard above the 100-year water surface elevation, which meets the UODT freeboard requirement of 2 feet.

Consistent with 2014 AASHTO LRFD Specifications, foundations should be designed to withstand the scour without any ground support (lateral or vertical) from soil or riprap. However, riprap should be placed around the abutments and center piers to limit the amount of future maintenance required.

APPENDIX (HEC-RAS OUTPUT DATA)

100-Yr Bridge Scour

Contraction Scour

		Left	Channel	Right
Input Data				
	Average Depth (ft):	1.47	12.16	1.32
	Approach Velocity (ft/s):	1.10	8.87	1.31
	Br Average Depth (ft):	2.81	12.83	1.70
	BR Opening Flow (cfs):	156.49	27309.70	33.81
	BR Top WD (ft):	24.02	253.40	12.11
	Grain Size D50 (mm):	2.00	2.00	2.00
	Approach Flow (cfs):	34.46	27454.25	11.29
	Approach Top WD (ft):	21.26	254.42	6.55
	K1 Coefficient:	0.590	0.590	0.590
Results				
	Scour Depth Ys (ft):	0.00	0.00	0.00
	Critical Velocity (ft/s):	2.23	3.18	2.19
	Equation:	Clear	Live	Clear

Pier Scour

All piers have the same scour depth

Input Data		
	Pier Shape:	Round nose
	Pier Width (ft):	5.00
	Grain Size D50 (mm):	2.00000
	Depth Upstream (ft):	13.09
	Velocity Upstream (ft/s):	7.92
	K1 Nose Shape:	1.00
	Pier Angle:	10.00
	Pier Length (ft):	40.00
	K2 Angle Coef:	1.75
	K3 Bed Cond Coef:	1.10
	Grain Size D90 (mm):	2.00000
	K4 Armouring Coef:	1.00
	Set K1 value to 1.0 because angle > 5 degrees	
Results		
	Scour Depth Ys (ft):	17.90
	Froude #:	0.39
	Equation:	CSU equation

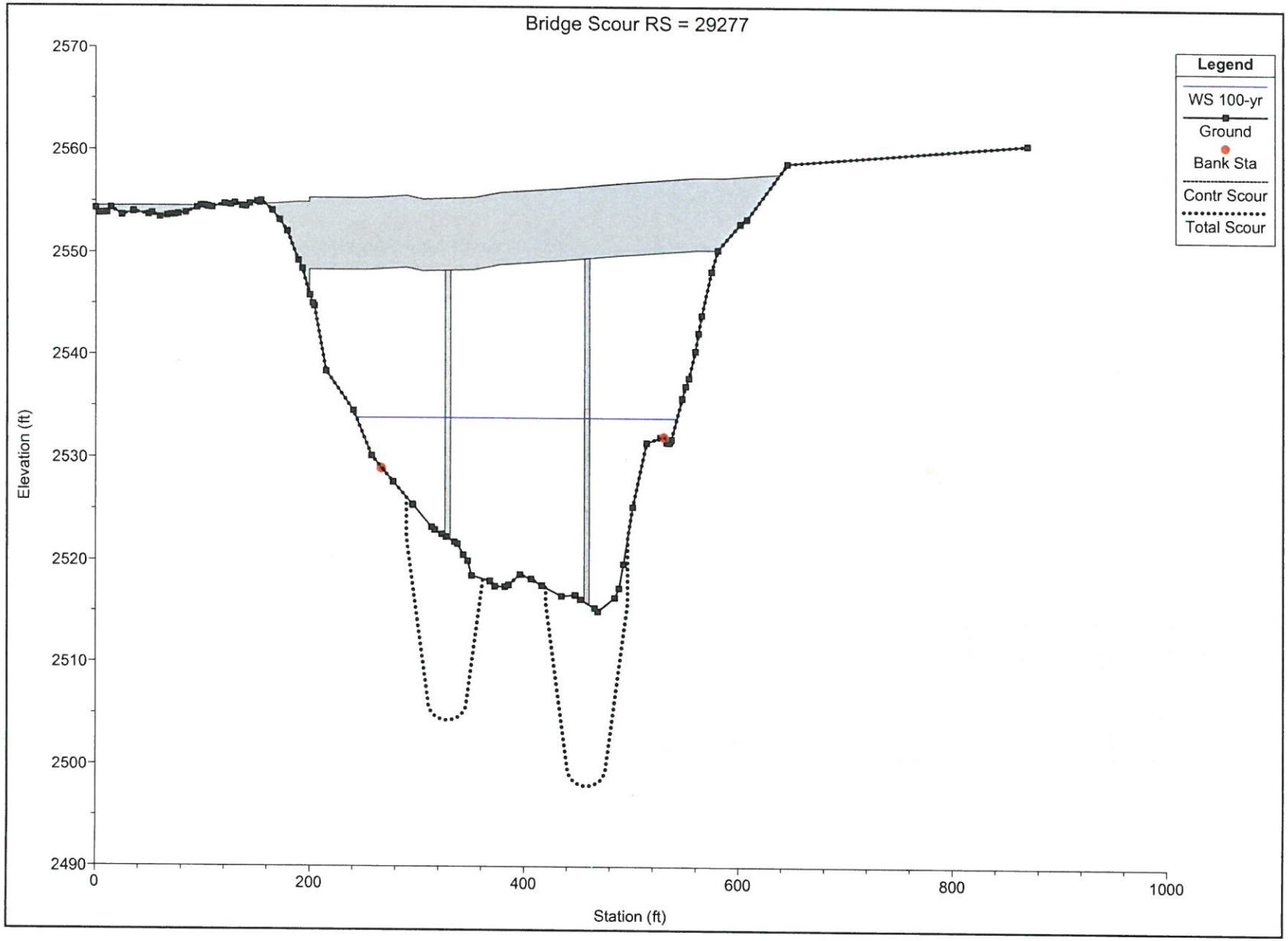
Bridge Scour RS = 29277
Legend
WS 100-yr
Ground
Bank Sta
Contr Scour
Total Scour
Elevation (ft)
2570
2560
2550
2540
2530
2520
2510
2500
2490
0
200
400
600
800
1000
Station (ft)

500-Yr Bridge Scour

Contraction Scour

		Left	Channel	Right
Input Data				
	Average Depth (ft):	5.40	19.21	4.74
	Approach Velocity (ft/s):	2.92	12.88	3.33
	Br Average Depth (ft):	6.55	19.79	5.67
	BR Opening Flow (cfs):	1772.57	61508.97	718.46
	BR Top WD (ft):	56.22	253.40	29.64
	Grain Size D50 (mm):	2.00	2.00	2.00
	Approach Flow (cfs):	727.91	62938.93	333.16
	Approach Top WD (ft):	46.20	254.42	21.12
	K1 Coefficient:	0.640	0.640	0.640
Results				
	Scour Depth Ys (ft):	3.66	0.00	1.70
	Critical Velocity (ft/s):	2.78	3.43	2.72
	Equation:	Live	Live	Live

Pier Scour

All piers have the same scour depth

Input Data		
	Pier Shape:	Round nose
	Pier Width (ft):	5.00
	Grain Size D50 (mm):	2.00000
	Depth Upstream (ft):	20.21
	Velocity Upstream (ft/s):	11.59
	K1 Nose Shape:	1.00
	Pier Angle:	10.00
	Pier Length (ft):	40.00
	K2 Angle Coef:	1.75
	K3 Bed Cond Coef:	1.10
	Grain Size D90 (mm):	2.00000
	K4 Armouring Coef:	1.00
	Set K1 value to 1.0 because angle > 5 degrees	
Results		
	Scour Depth Ys (ft):	22.36
	Froude #:	0.45
	Equation:	CSU equation

Combined Scour Depths

Pier Scour + Contraction Scour (ft):

Channel:	22.36

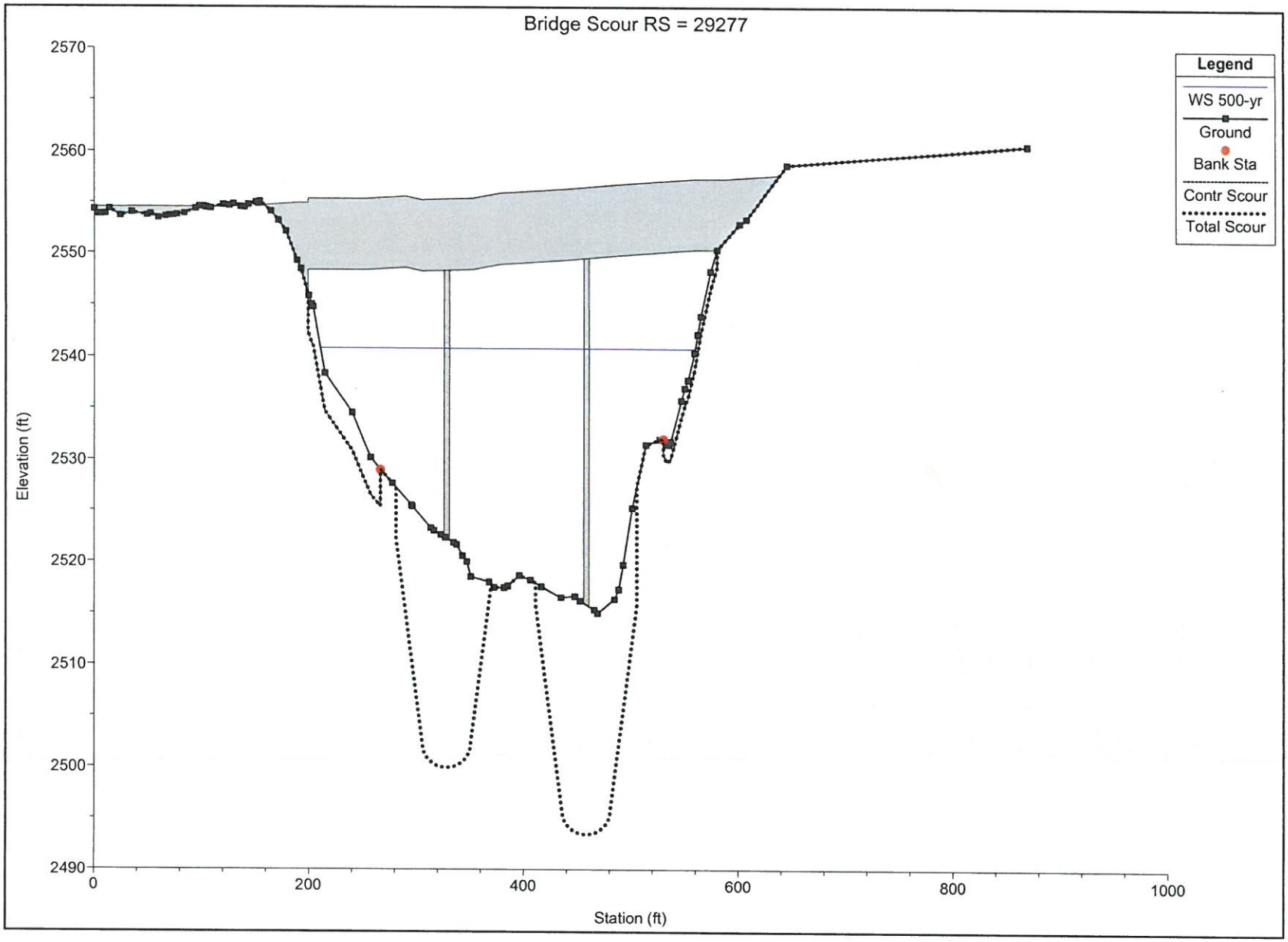
Bridge Scour RS = 29277
Legend
WS 500-yr
Ground
Bank Sta
Contr Scour
Total Scour
Elevation (ft)
2570
2560
2550
2540
2530
2520
2510
2500
2490
0
200
400
600
800
1000
Station (ft)

Comparison of 100-Yr Water Surface Elevation

Duplicate Effective Model Vs. Corrected Effective Model

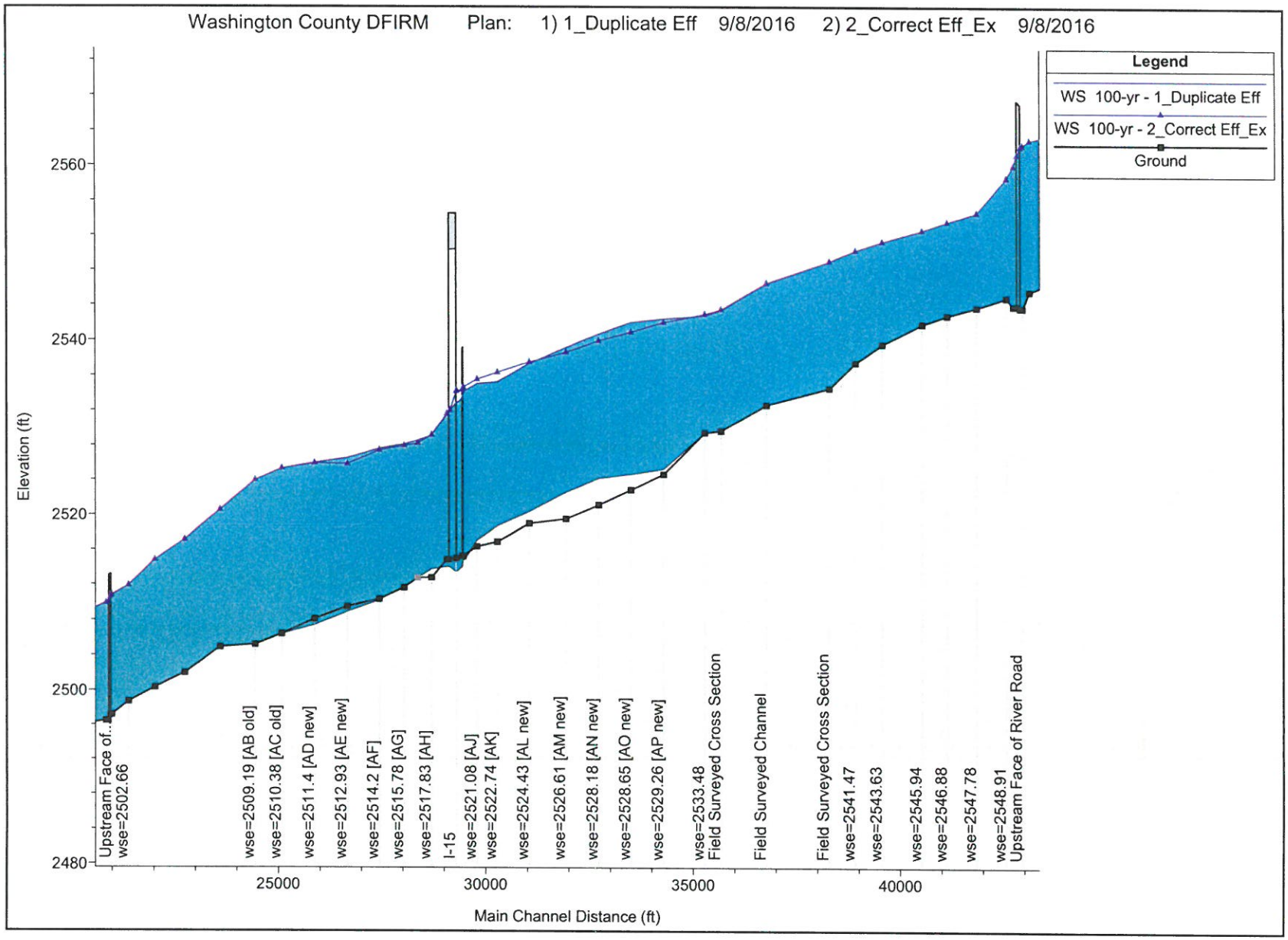
Washington County DFIRM Plan: 1) 1_Duplicate Eff 9/8/2016 2) 2_Correct Eff_Ex 9/8/2016
Legend
WS 100-yr - 1_Duplicate Eff
WS 100-yr - 2_Correct Eff_Ex
Ground
Elevation (ft)
2480
2500
2520
2540
2560
Main Channel Distance (ft)
25000
30000
35000
40000
Upstream Face of...
wse=2502.66
wse=2509.19 [AB old]
wse=2510.38 [AC old]
wse=2511.4 [AD new]
wse=2512.93 [AE new]
wse=2514.2 [AF]
wse=2515.78 [AG]
wse=2517.83 [AH]
I-15
wse=2521.08 [AJ]
wse=2522.74 [AK]
wse=2524.43 [AL new]
wse=2526.61 [AM new]
wse=2528.18 [AN new]
wse=2528.65 [AO new]
wse=2529.26 [AP new]
wse=2533.48
Field Surveyed Cross Section
Field Surveyed Channel
Field Surveyed Cross Section
wse=2541.47
wse=2543.63
wse=2545.94
wse=2546.88
wse=2547.78
wse=2548.91
Upstream Face of River Road

Comparison of 100-Yr Water Surface Elevation

Corrected Effective Model Vs. Proposed Model

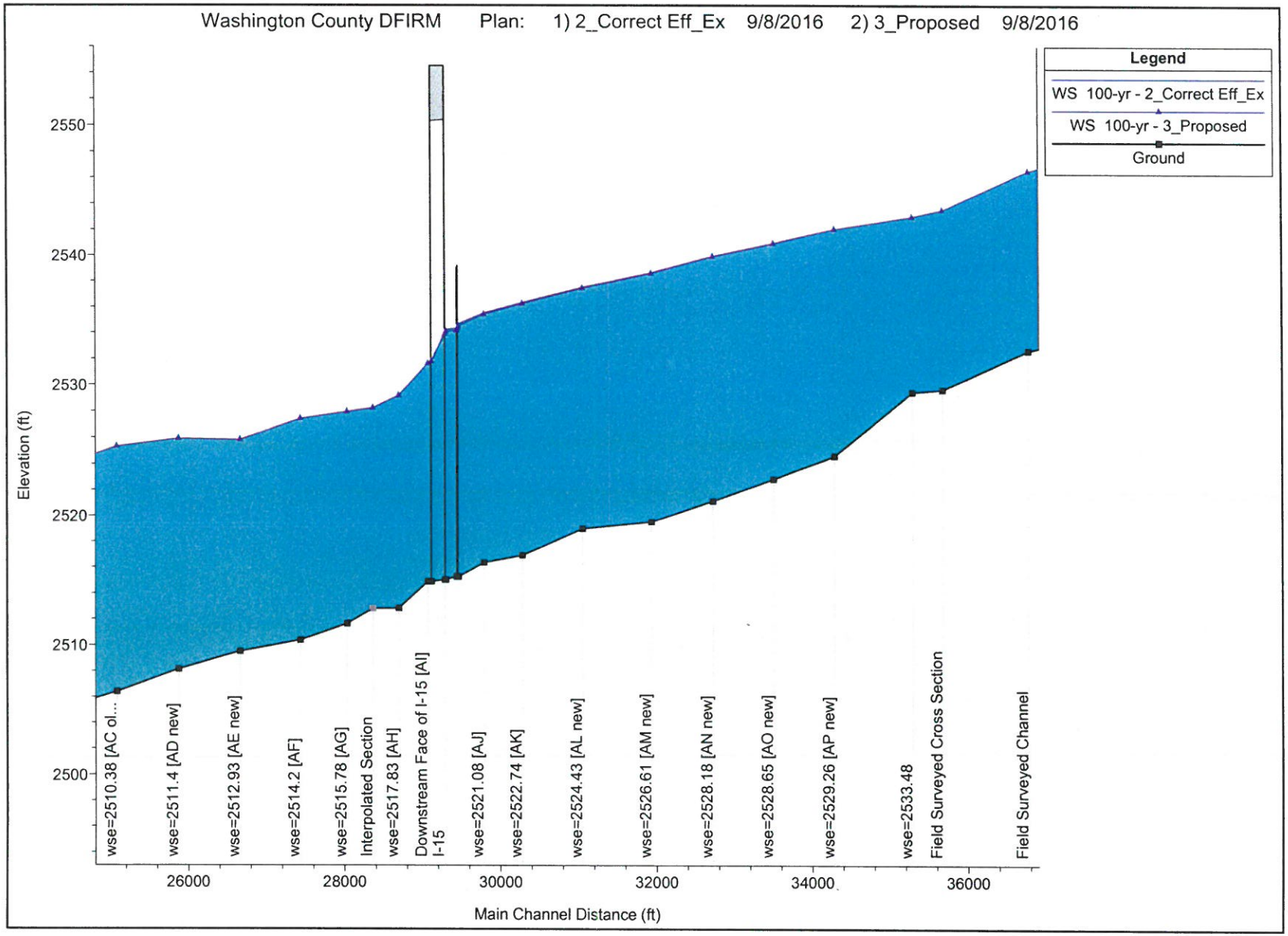
Washington County DFIRM Plan: 1) 2_Correct Eff_Ex 9/8/2016 2) 3_Proposed 9/8/2016
Legend
WS 100-yr - 2_Correct Eff_Ex
WS 100-yr - 3_Proposed
Ground
Elevation (ft)
2550
2540
2530
2520
2510
2500
wse=2510.38 [AC ol...
wse=2511.4 [AD new]
wse=2512.93 [AE new]
wse=2514.2 [AF]
wse=2515.78 [AG]
Interpolated Section
wse=2517.83 [AH]
Downstream Face of I-15 [AI]
I-15
wse=2521.08 [AJ]
wse=2522.74 [AK]
wse=2524.43 [AL new]
wse=2526.61 [AM new]
wse=2528.18 [AN new]
wse=2528.65 [AO new]
wse=2529.26 [AP new]
wse=2533.48
Field Surveyed Cross Section
Field Surveyed Channel
26000
28000
30000
32000
34000
36000
Main Channel Distance (ft)

September 15, 2016

SPECIAL PROVISION

PROJECT # S-I15-1(113)5
PIN # 12780

SECTION 00570M

DEFINITIONS

Add the following to Paragraph A.89, Article 1.7, "Terms" and replace with the following:

e. Landscaping and planting of the mitigation area may occur after the Substantial Completion date, as approved by the Engineer. See project landscape sheet for additional information.

Supplemental Specification
2012 Standard Specification Book

SECTION 00570M

DEFINITIONS

Delete Article 1.2 and replace with the following:

1.2 Related Sections

A. Section 00725: Scope of Work

B. Section 01280: Measurement

C. Section 01282: Payment

Add Article 1.3, paragraph B:

B. UDOT Specification Writers' Guide

Delete Article 1.6, paragraph A45 and replace with the following:

45. MUTCD Utah Manual on Uniform Traffic Control Devices (This applies to all references to the MUTCD in Department Standard Specifications and Drawings, Supplemental Specifications and Drawings, Special Provisions, and Plan Sheets.) Refer to http://www.udot.utah.gov/go/standardsreferences for a link to the Utah MUTCD.

Delete Article 1.7, paragraph A38 and replace with the following:

38. **Debarment** – Action taken by the Department or federal government pursuant to policies or regulations that prohibits a person or company from performing work on a public project.

Delete Article 1.7, paragraph A49, Table 1 and replace with the following:

Table 1

Holiday Categories	
Category I	**Category II**
Martin Luther King, Jr. Day	New Year's Day
Presidents' Day	Memorial Day
Columbus Day	Independence Day
Veteran's Day	Pioneer Day
	Labor Day
	Thanksgiving Day
	Christmas Day

Delete Article 1.7, paragraph A66 through A104 and replace with the following:

66. **Probation** – Action taken by the Department pursuant to Department policies that prohibits a person or company from bidding on Department or Department administered projects.
67. **Profile Grade** – The trace of a vertical plane intersecting the top surface of the proposed wearing surface, usually along the longitudinal centerline of the roadbed. Profile grade means either elevation or gradient of such trace according to the context.
68. **Project** – The specific section of the highway or other specific property on which construction is to be performed together with all improvements to be constructed under the contract.
69. **Proposal** – A bidder's written response to a Department request for proposals. See Value Engineering Change Proposal.
70. **Responsible Bidder** – A bidder able to perform the specified work as determined by the Department.
71. **Responsive Bid** – A bid that meets all requirements of the invitation for bids.
72. **Resources** – The labor, equipment, materials, and incidentals necessary to perform work on a contract bid item or other element of work.
73. **Right-of-Way** – A general term denoting land, property, or interest acquired for or devoted to transportation purposes.
74. **Roadbed** – The graded portion of highway within top and side slopes, prepared as a foundation for the pavement structure and shoulders.
75. **Roadbed Material** – Material in cuts, embankments, and embankment foundations from the subgrade down that supports the pavement structure.

76. **Roadside** – The areas between the outside edges of the shoulders and the right-of-way boundaries including unpaved median areas between inside shoulders of divided highways and areas within interchanges.
77. **Roadside Development** – Items necessary for the preservation or replacement of landscape materials. Features may include suitable plantings and other improvements or ground cover to preserve and enhance the appearance and stability of the highway right-of-way or acquired easements for scenic improvements.
78. **Roadway** – The portion of a highway within the construction limits.
79. **Shoulder** – The portion of the roadway adjacent to the traveled way where vehicles may stop for emergencies and which supports base and surface courses.
80. **Sidewalk** – That portion of the roadway constructed exclusively for pedestrian use.
81. **Significant Change in Character of Work –** Work that differs materially in kind or nature from that involved or included in the original contract or results in the total quantity of a major contract item, as defined in this section, varying from the original contract quantity by more than 25 percent.
82. **Site of Work –** As defined in Title 29 CFR Part 5.2 (l).
83. **Specifications** – The compilation of provisions and requirements for the performance of prescribed work.
    a. **Special Provisions** – A unique specification or a modification or revision to the standard specifications applicable to an individual contract.
    b. **Supplemental Specifications** – Approved additions and revisions to the Standard Specifications.
    c. **Standard Specifications** – Specifications approved for general application and repetitive use.
84. **Specifications Format** – See the Specification Writer's Guide. Refer to http://www.udot.utah.gov/go/standardsreferences.
    The titles or headings of the sections, parts, articles, paragraphs, and sub-paragraphs in Standard Specifications and Special Provisions are intended for convenience of reference and have no bearing on their interpretation.
85. **Stabilization** – Modification of soils or aggregates by incorporating materials that increases load-bearing capacity, firmness, and resistance to weathering or displacement.
86. **State** – The State of Utah acting through its authorized representative.
87. **Structures** – Bridges, culverts, catch basins, drop inlets, retaining walls, cribbing, manholes, endwalls, buildings, sewers, service pipes, underdrains, foundation drains, and other such features that may be encountered in the work.

88. **Subcontractor** – An individual or legal entity to which a Contractor sublets part of the work.
89. **Substantial Completion** – Substantially complete. The day, determined by the Engineer, when all of the following have occurred:
    a. The public, including vehicles and pedestrians, has full and unrestricted use and benefit of the facilities both from the operational and safety standpoint including all Intelligent Transportation Systems (ITS) and Advanced Traffic Management Systems (ATMS).
    b. All safety features are installed and fully functional, including, but not limited to, illumination, signing, pavement markings, all coats of striping paint, barrier, guardrail, impact attenuators, delineators, and all other safety appurtenances.
    c. All remaining bid items in the contract are complete in addition to safety features. Only minor corrective work and replacement of temporary substitute facilities remains for physical completion.
    d. The Contractor and Engineer mutually agree that all work remaining will be performed without lane closures, trail or sidewalk closures, or further delays, disruption, or impediment to the public.
90. **Substructure** – All of the structure below the girders or main load carrying members of simple and continuous span bridges, including abutments, bent caps, columns, bents, footings, wingwalls, and skewbacks of arches.
91. **Superintendent** – The Contractor's authorized employee in responsible charge of the work.
92. **Superstructure** – All of the structure except the substructure as defined in this section.
93. **Surety** – The legal entity or individual, other than the Contractor, executing a bond furnished by the Contractor.
94. **Time Related Cost (Time component)** – A bid item that identifies a daily value based on user costs or liquidated damages. Time value is the sum of the products of the time-related cost rates multiplied by the time bid by the Contractor to achieve the milestones specified.
95. **Town, City, or District** – A subdivision of the county used to designate or identify the location of the contract.
96. **Traveled Way** – The portion of the roadway designated for the movement of vehicles, excluding shoulders and auxiliary lanes.
97. **Unbalanced Bid**
    a. **Mathematically Unbalanced** – A bid containing lump sum or unit bid items that do not include reasonable actual costs plus a reasonable proportionate share of the bidder's anticipated profit, overhead costs, and other indirect costs.

b. **Materially Unbalanced** – A mathematically unbalanced bid that generates a reasonable doubt that awarding the contract to the bidder will result in the lowest ultimate cost to the Department.

98. **Unrestricted Traffic** – No traffic control measures in use that obstruct, delay, or in any way impede traffic flow, other than those specifically permitted in the contract.

99. **User Costs** – Costs incurred by the traveling public due to construction activities.

100. **Utility** – All privately, publicly, or cooperatively owned lines, facilities, and systems for producing, transmitting, or distributing communications, power, heat, gas, oil, water, waste, and storm water not connected with the highway drainage, signal systems, and other products that directly or indirectly serve the public. The utility company.

101. **Value Engineering Change Proposal** – A change proposed by the Contractor and considered by the Department intended to result in project cost savings to contract pay items without reducing the essential functions and characteristics of the project. Refer to Section 00725.

102. **Work** – The elements, activities, and incidentals necessary to complete a project (including labor, materials, equipment, and the interim products and stages attained in the course of reaching completion), and all alterations, amendments, or extensions made by change order or other written orders of the Engineer.

103. **Working Day** – Any calendar day, except:
    a. Contract designated holidays or days restricted in the contract.
    b. Days when the Contractor is specifically required by the contract or letter from the Engineer to suspend operations through no fault of the Contractor.
    c. Days when the Engineer determines that inclement weather or adverse conditions interfere with the progress of the work.
        1) When the Engineer determines that inclement weather prevents the Contractor from working for at least 50 percent of the normal working day.
        2) The day may be considered a working day even though conditions may improve and the major portion of the day could be considered suitable for operations if weather stops the Contractor's crew from beginning work at the normal starting hour and the crew is released as a result.
    d. Saturdays and Sundays for submittals and notifications.

104. **Working Drawings** – Drawings produced by the Contractor that supplement the contract drawings to provide information not included in the contract documents but that is required to fabricate, erect, transport, or temporarily support the structure or structural elements in the completion of the work. Working drawings do not supersede the contract drawings.

105. **Written Permission of the Engineer** – A letter signed by the Engineer granting specific permission and outlining limitations of the permission.

March 12, 2015

SPECIAL PROVISION

PROJECT # S-I15-1(113)5
PIN # 12780

SECTION 00725M

SCOPE OF WORK

Delete Article 1.2 and replace with the following:

1.2 RELATED SECTIONS

A. Section 00221S: Bidding Contract Time

B. Section 00555: Prosecution and Progress

C. Section 00570: Definitions

D. Section 00727: Control of Work

E. Section 01282: Payment

F. Section 01355: Environmental Compliance

G. Section 01554: Traffic Control

H. Section 01741: Final Cleanup

Delete Article 1.5 and replace with the following:

1.5 SUBMITTALS

A. Refer to this Section, article 1.7, paragraph C.

Delete Article 1.7 and replace with the following:

1.7 PARTNERING

A Implement partnering according to the Partnering Field Guide. Refer to http://www.udot.utah.gov/go/standardsreferences.

B. Share all partnering costs equally with the Department.

C. Submit certificates for all required individuals, as listed in the Partnering Field Guide before execution of the first month's construction estimate. Failure to comply will result in 25 percent of the first estimates Mobilization payment up to $25,000 being withheld until all individuals have completed the required training.

Add Article 1.19, paragraph J5:

5. Time savings resulting from a VECP are not financially compensated to the Contractor above the maximum dollar amount eligible for incentive payment as specified in Section 00221S.

Supplemental Specification
2012 Standard Specification Book

SECTION 00727M

CONTROL OF WORK

Delete Article 1.26 and 1.27 and replace with the following:

1.26 CLAIMS HIGHER LEVEL REVIEW

A. Make a good-faith effort to settle the claim by utilizing the Partnering Escalation Ladder identified in the Partnering Field Guide prior to submitting a claim and requesting a meeting with the Claims Review Board.

B. Submit a written request for a higher-level review to the Engineer within 10 calendar days after receiving the Engineer's decision or offer if not accepting the Engineer's denial of a claim, or a settlement offer. Attach to the written request for a higher-level review all required information. Refer to this Section, Article 1.23, paragraph D.

C. Failure to submit a request within this 10-day time frame is considered acceptance of the Engineer's claim denial or offer.

1.27 CLAIMS REVIEW BOARD

A. A Claim will be referred to the Claims Review Board (CRB) when requested by the Contractor as provided in this Section.

B. The purpose of the CRB is to provide an independent and impartial review of submitted claims, written findings, and recommendations to the Department's Deputy Director.

C. Scheduling a hearing or utilizing the CRB does not relieve the Contractor or Department of complying with all Contract terms and conditions, and does not waive any notice or timeliness requirements. Proceed diligently with all work during the CRB process.

D. The Director of Construction or designee schedules a hearing before the CRB when deemed to be in the best interest of both the Contractor and the Department based on the Contractor's request for a higher-level review.
   1. The claim may be presented informally with or without legal counsel.

2. Notify the Department at least 10 calendar days before the meeting when using legal counsel.
3. Legal counsel will be allowed to attend the presentation, and will be allowed to make brief opening and closing remarks and advise their clients. No other participation by legal counsel at the presentation will be permitted.

E. Parties will bear their own costs.
1. All costs associated with preparation and participation in the CRB meeting will be the responsibility of each party.
2. The Contractor will not receive compensation for travel, time, research activities, time away from the project, presentation preparation, presentation time or any other activities associated with the preparation for or participation in the CRB process.

F. Pre-presentation Requirements

1. The Department and the Contractor will prepare concise written statements describing the claim and each party's position with reasoning and submit to the Project Controls Engineer who will distribute them to the other party a minimum of 7 calendar days before the scheduled presentation.
2. The parties will submit their visual presentation to the Project Controls Engineer who will distribute it to the other party a minimum of 7 calendar days before the scheduled presentation, if either party chooses to prepare a visual presentation.

G. Presentation
1. The party that is in attendance will prevail in their position on the claim if either the Department or the Contractor fails to appear before the CRB on the date and time scheduled for the presentation without justifiable cause.
2. The Contractor will submit their position first, followed by the Department.
3. The duration of each party's presentation will be determined when the Claim meeting is scheduled and will be agreed to by both parties.
   a. The duration may vary depending on the complexity and size of the claim.
4. Only information or claims related to the Contractor's original claim may be discussed in the hearing.
   a. No new information may be submitted.
   b. The CRB will inform the party that no additional information or claims are permitted if the Contractor or Department attempts to submit new information.

5. Recording the meeting by tape, court reporter, or video is prohibited.
6. This presentation is informal, allowing for the Contractor and Department to present their positions, and for all parties to exchange questions and answers.
7. The meeting will be conducted as follows:
    a. The chairman informs the meeting attendees of the procedures and format of the meeting.
    b. Both parties may deliver brief opening and closing remarks.
    c. The Contractor presents their claim in detail as supported by previously submitted information and documentation.
        1) The presentation can be verbal or visual.
    d. The Department presents its detailed position as supported by previously submitted information and documentation.
        1) The presentation can be verbal or visual.
8. The CRB may allow rebuttals by both parties during the meeting after both the Contactor and Department make their presentations.
    a. Rebuttals will not be heard after the meeting has ended.

H. Offer of Settlement or Rejection of Claim
1. The Department Deputy Director makes an offer of settlement within 45 calendar days of the claim hearing if the offer is less than the amount required to be reviewed by the Transportation Commission.
2. The decision of the Department Deputy Director is administratively final.
    a. The CRB hearing ends all administrative appeal processes available to the Contractor.
    b. The Contractor may elect to file a complaint in State court if the claim is rejected, or if the sum tendered by way of settlement is not acceptable to the contractor.

I. Acceptance or Rejection
1. Provide written notice to the Deputy Director of acceptance or rejection of the offer or rejection of the claim within 7 days of the date of the Deputy Director's offer.
    a. The Department will promptly process any required payments or contract changes if both the Department and Contractor agree to resolve the Claim.

Delete Article 1.28, paragraph B and replace with the following:

B. Employ a qualified safety person.
   1. Required qualifications
      a. Verifiable broad based safety background.
      b. One of the following degrees or certifications:
         1) College degree in Occupational Safety & Health (OSH) related field
         2) Associate Safety Professional (ASP)
         3) Certified Safety Professional (CSP)
         4) Certified Industrial Hygienist (CIH)
         5) Construction Health and Safety Technician (CHST)
         6) Associate in Risk Management (ARM)
         7) OSHA 500, or other nationally recognized OSH related field certification approved by UDOT Risk Management
      c. Must stay current on certification via the OSHA 502 or equivalent of 8 Continuing Education Units (CEU) in OSH related fields every 3years.
   2. Responsibilities
      a. Perform on-site safety inspections on a monthly basis, for jobs 45 days or longer in duration. Refer to the UDOT Safety and Health Manual.
      b. Coordinate all safety related efforts with the on-site competent safety person.
      c. Cannot perform production-related responsibilities on the project.

August 8, 2016

SPECIAL PROVISION

PROJECT # S-I15-1(113)5
PIN # 12780

SECTION 00820M

LEGAL RELATIONS AND RESPONSIBILITY TO THE PUBLIC

Delete Article 1.18, Paragraph B.2 and replace with the following:

2. General Liability Insurance in the amount of $7,000,000.
   a. This can be accomplished with a Stand-Alone General Liability policy or a combination of a General Liability policy and an Excess/Umbrella policy adding up to $7,000,000.
3. Pollution Liability Insurance in the amount of $1,000,000 per occurrence and $3,000,000 in aggregate.

Supplemental Specification
2012 Standard Specification Book

SECTION 00820M

LEGAL RELATIONS AND RESPONSIBILITY TO THE PUBLIC

Delete Article 1.13 and replace with the following:

1.13 PROTECTING AND RESTORING PROPERTY AND LANDSCAPE

A. Preserve public and private property during the work.

B. Secure legal right to access the property before any work is performed on public or private property. All damage as a result of trespass will be the financial responsibility of the Contractor including additional acquisition costs.

C. The Engineer verifies the location of monuments and property line markers and provides written approval before they are moved, disturbed, or damaged.

D. Accept liability for any damage to public or private property resulting from defective work, materials, or non-execution of the contract until contract completion.

E. Restore damaged property and items removed temporarily during construction to a condition similar or equal to that existing before the damage at no cost to the Department.

F. Temporarily discontinue work if remains of prehistoric dwelling sites or artifacts of historical or archeological significance are encountered. Refer to Section 01355.

Delete Article 1.17, paragraph C and replace with the following:

C. Contractor and the Department agree to provide each other with a copy of the summons and complaint within a reasonable time if served with a lawsuit or Notice of Claim. Do not file a responsive pleading on behalf of the Department until receiving written notice that the Department chooses to have Contractor handle the defense. The Department will provide the Contractor such written notice in a timely manner allowing the Contractor adequate time to respond to the summons.

Delete Article 1.17, paragraph F3 and replace with the following:

3. Notify claimants of their right to request re-examination of denied or partially denied claims of $5,000 or less by the:
   UDOT Claims Re-Examination Board
   4501 South 2700 West
   West Valley City, UT 84114-8430
   Phone: (801) 965-4715
   a. The information provided to the claimant includes:
      1) A time deadline for requesting re-examination equal to seven days after notification of denial or partial denial
      2) Address and name of the person to whom it should be directed
      3) General information helpful in making a determination
      4) Department project number and location
   b. The claim can be overturned by the Department if claimant is not notified of right to request re-examination.

Add Article 1.17, paragraph F5:

5. The Claims Re-examination Board cannot review any claim filed in the small claims court, district court, or appealed to the district court.
   a. The person in charge of responding to Claims Re-examination Board requests will put the following paragraph on all written correspondence:

      "Parties seeking to file a claim before the Claims Re-examination Board must certify that the claim has not been filed in or heard by a small claims or district court."

Delete Article 1.18, paragraph B.2.a and replace with the following:

a. Provide General Liability insurance with the following minimum limits of liability:
   1) $1 million Bodily Injury and Property Damage – Each Accident
   2) $3 million General Aggregate
   3) $3 million Products and Complete Operations Annual Aggregate

Supplemental Specification
2012 Standard Specification Book

SECTION 01282M

PAYMENT

Delete Article 1.8, paragraph A1 and replace with the following:

1. The Department does not allow compensation for loss of expected reimbursement or loss of anticipated profits suffered or claimed by the Contractor resulting either directly from such alterations or indirectly from unbalanced allocation among the contract items of overhead expense and subsequent loss of expected reimbursement or from any other cause.

Delete Article 1.9, paragraphs C and D and replace with the following:

C. Negotiated lump sum or unit prices for changes to the contract work will be based on the Contractor's estimate to do the work as validated by the Engineer's independent cost assessment. Support the price with a detailed cost estimate that includes the following information:
   1. Estimated labor hours based on agreed upon productivity rates.
      a. Use the actual cost of wages and benefits for the labor rates applied to the estimated man hours.
      b. Include certified accounting records verifying these costs or make them available upon request of the Engineer.
   2. Estimated material quantities based on agreed upon quantities.
      a. Use actual material costs as verified by supplier estimates or invoices.
      b. Use agreed to production rates for material produced on site.
   3. Estimated equipment hours based on agreed upon productivity rates.
      a. Use the lesser of the following for determining equipment costs:
         1) Rental rates obtained from the Rental Rate Blue Book for Construction Equipment according to this Section article 1.11.

2) Actual cost of the equipment to the Contractor based on internal equipment billing rates or actual rental rates supported by rental agreements for equipment applied to the estimated equipment hours. Include certified accounting records substantiating these costs or make them available upon request of the Engineer.

4. A 15 percent markup will be paid on all expenses identified above. This markup compensates the Contractor for home office overheads and profit.
5. The following additional markups will be allowed on the total of all work according to change order performed solely by subcontractors:
   a. 15 percent markup on first $75,000 of total subcontracted work.
   b. 10 percent markup on total of subcontracted work between $75,000 up to $250,000.
   c. 7.5 percent markup on total of subcontracted work exceeding $250,000.
6. No other expenses will be compensated unless approved by the Engineer.

Delete Article 1.10, paragraph A2 and replace with the following:

2. The Department does not compensate for the following:
   a. Labor inefficiencies caused by the Contractor.
   b. Consequential damages, including but not limited to, loss of bonding capacity, loss of bidding opportunities, and insolvency.
   c. Attorney's fees, claims preparation expenses, or litigation costs.

Delete Article 1.11 and replace with the following:

1.11 FORCE ACCOUNT

A. The Engineer may require the Contractor to work on a force account basis for the convenience of the Department or when the Contractor and Engineer are unable to negotiate an agreed upon price for changed or added work. Costs reimbursed according to this Section are considered full and complete compensation for the work performed.

B. Labor will be reimbursed at the actual cost of wages, benefits and burdens. A 15 percent markup will be paid on all labor expenses. This markup compensates the Contractor for field overheads, home office overheads, and profit.

1. Provide daily field records showing the labor hours charged to the force account work. The Engineer must approve these records daily.
2. Include certified accounting records verifying these costs or make them available upon request of the Engineer.

C. Materials installed and accepted by the Engineer as part of the force account work will be paid for at actual cost plus a 15 percent markup. The markup compensates the Contractor for field overheads, home office overheads, and profit.

1. Provide daily field records showing the materials installed as part of the force account work. The Engineer must review and approve these records daily.
2. Include copies of invoices and certified accounting records verifying these costs or make them available upon request of the Engineer.

D. Compensation for Equipment

1. The Department will pay the following:
   a. Hourly rates for machinery or special equipment, excluding small tools, authorized by the Engineer. Hourly rental rates are determined by the monthly rental rate found in the Rental Rate Blue Book for Construction Equipment divided by 176. The total hourly rates have been computed from equipment costs currently in effect and do not include costs for operating personnel.

      Obtain this publication through:
      Equipment Watch
      1735 Technology Drive, Suite 410
      San Jose, CA 95110-1313
      Phone: (800) 669-3282
      Fax: (800) 224-3527
      Refer to http://www.udot.utah.gov/go/standardsreferences.

      The rates require adjustment by a Regional Factor and a Depreciation Factor with operating and standby rates established as follows:

      1) Operating Rate – Hours the equipment is actually in use. This includes ownership and operating costs adjusted for depreciation and region factors.

2) Standby Rate – Compensation for equipment required to be at the work site but not operating. This rate is 50 percent of the adjusted ownership and operating costs computed above. The duration of allowable standby time must be approved in writing by the Engineer with a maximum of eight hours per day or 40 hours in a week.

3) The Department uses the shown capacity that is closest to the manufacturers when the manufacturer's rated capacity falls between those shown in the Rental Rate Blue Book for Construction Equipment.

4) Agree upon all rates in writing before beginning work.

5) Obtain approval from the Engineer for any equipment rental rates not provided before the start of any force account work.

2. The Department does not pay for pickup trucks used solely for transportation.

3. Provide daily field records showing the equipment hours charged to the force account work. The Engineer must review and approve these records daily.

4. Provide certified accounting records verifying these costs.

E. Subcontract work will be reimbursed in the same manner as the Contractor's work is reimbursed as described above.

1. The following additional markups will be allowed on the total of all work according to force account performed soley by subcontractors:

   a. 15 percent markup on first $75,000 of total subcontracted work.

   b. 10 percent markup on total of subcontracted work between $75,000 up to $250,000.

   c. 7.5 percent markup on total of subcontracted work exceeding $250,000.

2. Provide daily field records showing the subcontract labor, material, and equipment charged to the force account work. The Engineer must review and approve these records daily.

3. Provide certified accounting records verifying these costs.

Delete Article 1.12 paragraph C and replace with the following:

C. Payments are based on estimates prepared by the Engineer of the value of work performed and materials in place under the contract and for payment for material on hand according to this Section. Payment will not be made for material and work without complete acceptance documentation.

Delete Article 1.13 title and paragraph A and replace with the following:

1.13 PAYMENT FOR MATERIAL ON HAND (Stockpile)

A. Present the delivery copies of invoices. The Department may include advance partial payments for acceptable nonperishable materials purchased expressly for incorporation in the work when delivered in the vicinity of the project or stored in approved storage place.

1. The Engineer determines the amount to be included in the estimate but in no case will the amount exceed the value of the materials as shown on the delivery invoice or 75 percent of the in-place price, whichever is less.
2. Furnish evidence that the stockpiled materials are irrevocably obligated to the project when the approved storage location is other than the project site.
3. The Department does not pay when the invoice value of such materials, as determined by the Engineer, amounts to less than $2,000 or if materials are to be stored less than 30 calendar days, unless otherwise specified.
   a. The Department will waive the 30 day limit and pay advance payment for Pavement Marking Tape if the Pavement Marking Tape placement is delayed more than one week beyond the original CPM schedule date.
4. Furnish the Engineer certified paid invoices or a certified statement with a copy of the check showing payment within 60 calendar days following the date of the estimate invoice on which the stockpile material is to be paid by the Department.
5. Material will be removed from the next partial estimate as stockpiled materials if proper invoices showing payment to the supplier is not received.

Add Article 1.14, paragraph A4:

4. An affidavit may be required, as determined by the Engineer, from all Subcontractors certifying they have been paid for all labor and materials incorporated into the project.

Delete Article 1.15, paragraph A3 and replace with the following:

3. This provision is automatically invoked and becomes effective when the change in the cost of fuel warrants the adjustment during the course of construction of the project and remains in effect for the duration of the project.
   a. Adjustments are then made on all future partial estimates.

Add Article 1.16, paragraph A3:

3. The Contractor can choose to opt out of the Asphalt Cost Adjustment (ACA).
   a. Check the appropriate box on the bid proposal indicating the intent to opt out of the ACA.
   b. The ACA cannot be reactivated on a project for which the Contractor has opted out.

Delete Article 1.16, paragraph C.1.a.2) and replace with the following:

2) The high reported wholesale asphalt price (per ton) from the Argus Asphalt Report for Rocky Mountain and West coast asphalt prices for:
   Denver
   Las Vegas
   Montana
   Phoenix
   Salt Lake City
   Wyoming

October 18, 2016

SPECIAL PROVISION

PROJECT# S-I15-1(113)5
PIN# 12780

SECTION 01315S

PUBLIC INFORMATION SERVICES

Delete Section 01315 in its entirety and replace with the following:

PART 1 GENERAL

1.1 SECTION INCLUDES

A. Responsibilities of Contractor Public Information Contact for the duration of a project.

1.2 RELATED SECTIONS

A. Section 00555: Prosecution and Progress.

B. Section 01554: Traffic Control.

1.3 REFERENCES Not Used

1.4 DEFINITIONS

A. Contractor Public Information Contact (PIC): Person from the Contractor, who is regularly on the project site and will be responsible for coordinating public needs with the Third-party Public Information Manager (PIM) and UDOT Engineer.

B. Third party Public Information Manager (PIM): Person hired by UDOT to perform public information services on a project.

C. Logbook: Book where communication with Engineer, Third-party PIM, and stakeholders is documented.

D. Project Hotline: Phone number established by the Third-party PIM available for stakeholders to reach the project team.

E. Public Information (PI) Services: Tasks performed to inform and update stakeholders about construction activities, which may include distributing

fliers and PI contact information, updating the UDOT Traffic website and app, and creating media materials.

F. Region Communications Manager (RCM): Person who oversees communications and public information services on projects in the Region.

G. Stakeholder: Any person, business, agency, community or organization affected by construction project impacts.

1.5 SUBMITTALS

A. Provide a copy of the logbook to UDOT Engineer and Third-party PIM on a weekly basis, or as needed.

1.6 PERFORMANCE REQUIREMENT

A. Designate the Contractor PIC at the project pre-construction conference.
   1. Responsible for coordinating PI needs with Engineer and Third-party PIM.
      a. Contractor PIC duties take precedence over other assigned duties.

1.7 CONTRACTOR PIC RESPONSIBILITIES

A. Maintain daily, or as needed, communication with Engineer and Third-party PIM.

B. Document correspondence with Engineer, Third-party PIM, and stakeholders in logbook.

C. Attend weekly construction meeting with project team to gather schedule updates, share stakeholder inquiries, and coordinate PI needs.

D. Work with Engineer and Third-party PIM to resolve PI questions and concerns within 24 hours of initial stakeholder inquiry. Third-party PIM will respond to stakeholder. (Safety issues must be resolved immediately)

E. Attend stakeholder meetings to resolve issues, as needed.

F. Forward all media inquiries, written and verbal, regarding the project to the Third-party PIM.

G. Notify Third-party PIM of the following within specified time frames:
   a. Give notice 14 days in advance of any construction activities that will impact homes, businesses, schools,

communications or transportation.

b. Give notice at least 10 days in advance of construction activities that affect utilities.

c. Give notice immediately of any unanticipated traffic flow impacts. Provide anticipated traveler delay times, avoidance, prevention and/or reduction strategies that the Contractor intends to employ to avoid or minimize such an impact in the future.

d. Provide information about project activities affecting traffic flow 48 hours in advance.

1.8 PAYMENT PROCEDURES

A. Department makes:

1. Partial payments for the pay item Public Information Services as the work progresses when the Contractor provides public information services according to this specification.
2. Payments based on a percentage of project completion.

B. The Engineer and Third-party PIM monitor and evaluate the Contractor PIC and all PI services. Failure to provide public information services according to this specification results in a weekly deduction of $1,000.

PART 2 PRODUCTS

2.1 OFFICE SPACE AND EQUIPMENT - GENERAL

A. Telephone Services.

B. Labor and material required to perform the duties and responsibilities of this section.

PART 3 EXECUTION

3.1 ESTABLISH LOCAL PUBLIC INFORMATION SERVICES

A. Provide contact information to Engineer and Third-party PIM.

B. Provide telephone number (established and communicated by the Third-party PIM) to sign manufacturer or Traffic Control Maintainer for placement on GS20 - 2a End of Road Work Information Sign. Refer to TC Series Standard Drawings and Section 01554.

C. Maintain logbook.

1. Document correspondence with Engineer, Third-party PIM, and stakeholders.
    a. Date, time.
    b. Contact information
        1. Name, phone number, address and/or email address.
    c. Description of inquiry.
    d. Response, if any.
    e. Subsequent responses or actions taken during construction.

2. Work with Third-party PIM to coordinate, answer and determine course of action to respond to all inquiries within 24 hours of initial request. (Safety issues must be resolved immediately). Action may include a phone call, written correspondence and/or in-person meeting, which Third-party PIM will coordinate.

3. Provide copy of logbook to Engineer and Third-party PIM on a weekly basis, or as needed.

D. Respond to questions from UDOT Engineer and Third-party PIM concerning activities and schedules by end of business on the day of request.

E. Communicate deviations from schedule established in the weekly update meeting to Engineer and Third-party PIM as soon as the change is made.

F. Communicate project activities that affect traffic and access to the Engineer and Third-party PIM.

1. Contact them within 15 minutes of a major accident or other unexpected occurrence that impedes traffic flow, alters traffic routes significantly or causes other disruption to the traveling public in the project area.

END OF SECTION

Supplemental Specification
2012 Standard Specifications Book

SECTION 01355M

ENVIRONMENTAL COMPLIANCE

Delete Article 3.7, paragraph A1 and replace with the following:

1. Cultural and Paleontological – Initiate consultation with a Department staff archaeologist to determine cultural resource survey needs and clearance requirements. The Department staff archaeologist provides clearance to the Engineer through written notification.

Supplemental Specification
2012 Standard Specification Book

SECTION 01452M

PAVEMENT SMOOTHNESS

Delete Article 1.8 paragraph I and replace with the following:

I. Failure to correct defects identified at the time of acceptance testing within 14 calendar days after notification by the Engineer results in penalty assessed at $100 per day per affected pavement section.
   1. The Engineer may waive the penalty when it is determined to be in the best interests of the Department to defer corrective work.

April 13, 2016

SPECIAL PROVISION

PROJECT # S-I15-1(113)5
PIN # 12780

SECTION 01455M

MATERIAL QUALITY REQUIREMENTS

Delete Article 1.16, paragraph B1 and replace with the following:

1. All manufacturing processes of the steel and iron material in a product such as melting, rolling, extruding, machining, bending, grinding, drilling, and coating must occur within the United States.

Delete Article 1.16, paragraph C1c and replace with the following:

c. Material descriptions, quantities, and means of material identification such as heat numbers, lot numbers, and other industry identification markings for each process the material underwent so the final product can be tracked through a step process from melting to final product.
d. Tracking quantities is not required for coating operations and for mill certifications.

Delete Article 1.16, paragraph D1 and replace with the following:

1. Track the use of all permanent foreign steel incorporated in the project.

Delete Article 1.16, paragraph E and replace with the following:

E. The following are exempt from Buy America except as noted:

1. Temporary steel or iron materials.
2. Materials left in place for the Contractor's convenience that could be removed without damaging the completed work
3. Items such as nuts, bolts, washers, screws, concrete chairs, spacers, mailboxes, and other steel or iron parts that may be considered miniscule or non-structural to the whole of the project.
4. Fencing stays, clips, staples, or other miscellaneous fencing components.
5. Manufactured assemblies that are less than 51 percent by weight steel or iron content when it is delivered to the job site for installation.
   a) Pre-cast items such as pipe, manholes, and drainage boxes must meet the Buy America requirements.
6. The major steel and iron components of the following and other similar assemblies must meet the requirements of Buy America:
   a) Guardrail, guardrail posts, end sections, terminals, cable barrier, steel or iron pipe, conduit, grates, manhole covers and risers, mast arms, poles, standards, trusses, supporting structural members for signs, luminaires, and traffic control systems.

Supplemental Specification
2012 Standard Specification Book

SECTION 01455M

MATERIAL QUALITY REQUIREMENTS

Add Article 1.4, paragraph B:

B. Approved Products List (APL) - A list of products and materials that the Department accepts as meeting the requirements in the Department's Standard Specifications and Drawings. Refer to the Department Materials Web site to access the APL at http://www.udot.utah.gov/go/standardsreferences.

1. The APL does not include all acceptable products. It includes products submitted by manufacturers and reviewed by the Approved Products Panel.
2. Inclusion in the APL is not a product endorsement by the Department.

Add Article 1.5, paragraph E:

E. Completed APL Compliance Form and Manufacturer Instructions printed from the Department's Approved Products List Web site. Refer to the Department Materials Web site to access the APL at http://www.udot.utah.gov/go/standardsreferences. Refer to this Section, Article 1.18.

Delete Article 1.11, paragraph A4 and replace with the following:

4. Lot identification or manufacturer's identification of the certified materials or assemblies delivered to the project

Add Article 1.11, paragraph D:

D. Provide the APL Compliance Form and Manufacturer Instructions instead of a Certificate of Compliance if the product is listed in the Department's APL. Refer to this Section, article 1.18.

1. Do not use the APL Compliance Form for acceptance when a project special provision modifies the product requirements in the Standard Specifications.

Add Article 1.18:

1.18 APL COMPLIANCE FORM

A. Provide the completed APL Compliance Form and Manufacturer Instructions printed from the Department's Approved Products List website instead of a Certificate of Compliance if the product is listed in the Department's APL. Refer to the Department Materials Web site to access the APL at http://www.udot.utah.gov/go/standardsreferences.

1. The Engineer will evaluate the suitability of the product for its intended use according to the restrictions in the APL.
2. Do not use the APL Compliance Form for acceptance when a project special provision modifies the product requirements in the Standard Specifications.

B. Buy America requirements still apply when acceptance is based upon the APL Compliance Form. Refer to this Section, article 1.16.

Supplemental Specification
2012 Standard Specification Book

SECTION 01456M

MATERIALS DISPUTE RESOLUTION

Delete Article 1.6, paragraph C and replace with the following:

C. Include the following items in the engineering analysis where applicable:
   1. Data supporting the Contractor's test results. Data must be based on project quality control testing.
      a. Split sample testing performed within the applicable contract.
      b. Contractor's test data for the disputed results along with all supporting test data and calculations for calculated values such as bulk specific gravity, maximum specific gravity, and ignition oven results for disputing VMA in asphalt concrete.
      c. Successful laboratory correlation information when required by material specification.
   2. Slump, air, yield, and similar items for disputing compressive strength of Portland cement concrete.
   3. Statistical analysis or identification of outliers.
   4. Procedures or issues leading to disputed acceptance test results.
   5. Incentive/Disincentive calculations based on both Contractor and Department test values, individually.

August 8, 2016

SPECIAL PROVISION

PROJECT # S-I15-1(113)5
PIN # 12780

SECTION 01554M

TRAFFIC CONTROL

Add the following to Article 1.2, "RELATED SECTIONS":

I. Section 02741: Hot Mix Asphalt (HMA)

Add the following paragraph to article 1.1

D. Temporary asphalt pavement requirements for traffic control.

Add the following paragraph to article 1.4

C. UHP – Utah Highway Patrol

Add the following paragraph to article 1.5

C. Submit Implementation Plan to the Engineer for approval a minimum of seven (7) days in advance of the proposed use of Highway Patrol Troopers. The plan will detail the proposed location(s), times, description of roadwork being performed and the use of Highway Patrol Troopers for enforcing the Traffic Control setup within a Work Zone.

D. Utah Highway Patrol (UHP) will submit invoices for Highway Patrol Troopers directly to the Contractor for payment.

Delete paragraph C of Article 1.12 and replace with the following:

C. Include in the bid item Traffic Control all materials, equipment, labor, flagging, pilot car, variable message boards, Utah Highway Patrol (UHP) troopers, temporary pavement markings and removal or both, and workmanship required for the design, implementation, and maintenance of the Traffic Control Plan.

1. The Utah Highway Patrol (UHP) will submit invoices for Highway Patrol Troopers directly to the Contractor for payment. The Contractor will pay the UHP directly for all invoiced hours on the project. The set rate for UHP assistance is $50/hour. Bidders are required to bid the cost for UHP as part of their Traffic Control Plan.

Add the following paragraph to article 2.3, "TRAFFIC CONTROL SIGNING AND DEVICES":

F. Provide, install, and maintain two (2) variable message boards seven (7) days prior to beginning any construction on the project and throughout the major items of work that will impact traffic. Inform the public of the date construction will start and the lane restrictions that will be in place during the project. Prior to placing VMS boards, coordinate messages with Engineer. Coordinate duration and locations of the boards with the Engineer. Any relocation necessary for construction activities will be done at no cost to the Department.

Add the following article to Part 2:

2.5 TEMPORARY ASPHALT PAVEMENT

A. Obtain approval from the Engineer for temporary asphalt pavement mix design prior to use.

Delete Article 3.3 paragraph C and replace with the following:

C. Remove all traffic control from site of work when not required within 96 hours.
   1. Remove traffic control devices from roadway a distance twice that of the Work Clear Zone if they will be used within 96 hours of the daily work stoppage and are not required for immediate traffic control. Refer to the TC Series Standard Drawings.
      a. Obtain written permission from property owner prior to storing traffic control devices on private property.
   2. Cover post mounted signs completely with an opaque and durable cover when not applicable.

Remove Article 3.7. Paragraph A and replace with the following:

A. Rolling Traffic Slow Down

1. Use a Highway Patrol Trooper, or other law enforcement officers who have been trained in implementing rolling traffic slow downs, in a marked vehicle with overhead flashing lights to conduct the slow down. Law enforcement officers used are to have specific training in safe and effective use of law enforcement personnel in work zones. Guidance on training as well as free online training courses can be found at the following link: http://www.nhi.fhwa.dot.gov/training/course_search.aspx?tab=0&key=133119&course_no=133119&res=1
2. Use the officer in the marked vehicle to slow down one or two lanes. Use, in any combination, either contractor-supplied vehicles equipped with overhead amber flashing lights or additional officers in marked vehicles at the rate of one vehicle per lane thereafter for all lanes of the highway to affect the traffic slow down.
3. Additional vehicles as described in this article may be used in the traffic slow down to supplement the law enforcement vehicle when required by the officer.
4. No traffic slow downs will be allowed during peak hours, holiday periods, or events defined in Section 00555M or by the Region Traffic Engineer.
5. The duration of any traffic slow down is not to exceed five minutes or as approved by the Region Traffic Engineer and communicated through the Engineer, except as allowed in Section 00555M.

Add the following article to Part 3:

3.8 NOTIFICATION OF LANE CLOSURES AND SUBSEQUENT OPENINGS

A. Provide advance notification of every lane closure to the Engineer or designee and the Region Communication Manager (RCM) or designee.

1. Notify the Engineer and RCM or designee as soon as it is known that a lane closure is necessary to execute the work and at a minimum, 72 hours before the closure.
2. Notify the Engineer and RCM or designee immediately when the schedule, location, or need for an upcoming lane closure changes.
3. Include in the notification the route, the beginning and ending milepost/mile marker, number of lanes to be closed, direction of the closure, the date and time of the beginning of closure, and the date and time of the ending of the closure.

B. Provide real-time notification of every lane closure, and subsequent lane opening, to the UDOT Traffic Operations Center (TOC) at 801-887-3700.

1. **Lane Closure**: Notify the TOC within 10 minutes before placing the first traffic control device in the travel lane.
2. **Lane Opening:** Notify the TOC within 10 minutes after removing the last traffic control device in the lane.
3. Include in the notification the route, the beginning and ending milepost/mile marker, number of lanes closed or opened, direction of the closure, and the date and time.

Add the following article to Part 3:

3.9 TRAFFIC CONTROL OPERATIONS AND UHP

A. The use of off-duty Utah Highway Patrol Troopers (UHP) is required any time work is taking place that impacts I-15 traffic.

B. Coordinate and schedule with each UHP Section Office for off-duty Highway Patrol Troopers to meet the project implementation plan.
   1. Contact the UHP Section Office in the project area a minimum of twenty one (21) days in advance of the proposed use of Highway Patrol Troopers.
   2. Provide detailed information about the implementation plan, including but not limited to,
      a. Project location
      b. Construction schedule
      c. Number of hours of UHP assistance requested
      d. Contact number(s) for scheduling Trooper(s)
      e. Other information requested
   3. UHP Section Office contact information;

      Section 9: Carbon, Emery & Eastern Wayne Counties
      1367 South Carbon Ave., Price, Utah 84501
      Office: (435) 637-0980

      Section 10: Sanpete, Sevier, Piute, Western Wayne & Garfield Counties
      835 East 300 North Suite 600, Richfield, Utah 84701
      Office: (435) 896-2780

      Section 11: Beaver & Iron Counties
      89 East Canyon Commercial Avenue, Cedar City, Utah 84720
      Office: (435) 865-1970

      Section 12: Kane & Washington Counties
      620 South 5300 West Suite 216, Hurricane, Utah 84737
      Office: (435) 634-2890

Section 13: Grand & San Juan Counties
125 East Center West Side, Basement, Moab, Utah 84532
Office: (435) 259-5441

Section 14: Juab & Millard Counties
765 South Highway 99, Fillmore, Utah 84631
Office: (435) 743-6530

C. Provide a minimum of three (3) working days advanced notice, to the UHP Section Office and/or officers for scheduling your specific traffic control assistance.

D. Provide a minimum of 12 hours advanced notice to the UHP contact for canceling or changing requests. A minimum of two (2) hours will be invoiced by the UHP due to improper notification due to a change in the schedule or implementation plan. Hours invoiced due to cancelations or changes made less than 12 hours in advance will be paid by the Contractor at 100%.

E. Provide an implementation plan and coordinate construction activities that will require the UHP to be on the project for a minimum of two (2) hours, not including travel time.

F. Time shown on the billings will represent time spent at the project site, minimum of two (2) hours per day. Round time to the nearest 30 min and include actual time spent on the project and not estimated or scheduled hours, even when work is finished early.

Add the following article to Part 3:

3.10 TEMPORARY ASPHALT PAVEMENT

A. Provide temporary asphalt pavement, as needed, for any unpaved location under traffic. Refer to Section 00555M for traffic requirements during construction.

B. All temporary asphalt pavement surfaces adjacent to existing pavement must meet the same ride-quality surface.

C. Maintain temporary asphalt pavement during construction. Repair and/or replace any temporary asphalt, as directed by the Engineer, at no additional cost to the Department.

D. Remove all temporary asphalt prior to Final Completion unless otherwise directed by the Department.

Supplemental Specification
2012 Standard Specification Book

SECTION 01554M

TRAFFIC CONTROL

Delete Article 1.2, paragraph G and replace with the following:

G. Section 02845: High Tension Cable Barrier

H. Section 02890: Retroreflective Sheeting

Add Article 2.3, paragraph E:

E. Maintain cable barrier and anchor systems during construction.
   1. Protect existing hazards when cable barrier and anchor systems are rendered inoperable by work. Address barrier length of need for the hazard.
   2. Maintain the required tension in the cable barrier system when the cable is disconnected by installing anchor systems on each end of the disconnect.
      a. Do not cut cable. Disconnect cable at cable splice or anchor system locations only.
   3. Install NCHRP 350 approved terminal compatible with existing cable system. Refer Section 02845.
      a. Tension cable to manufacturer's requirements.

August 8, 2016

SPECIAL PROVISION

PROJECT # S-I15-1(113)5
PIN #12780

SECTION 01571M

TEMPORARY ENVIRONMENTAL CONTROLS

Add the following to Section 01571, Part 1, Article 1.4:

M. Inlet Barrier – A protective barrier placed around an inlet that intercepts and traps sediment before it enters the inlet.

Replace Section 01571, Part 2, Article 2.1.F.1.a with the following:

a. Use 12-inch diameter fiber roll selected from products included on the Department Approved Products List for Fiber Rolls.

Add the following to Section 01571, Part 2, Article 2.1:

M. Gutter Inlet Barrier
   1. Products listed under Drop Inlet Barriers, Pipe Inlet Barrier, or Curb Inlet Barrier that are approved by the Engineer, do not interfere with traffic operations or safety, and do not cause water to bypass inlet in high flows.
      a. The Engineer may approve the use of other best management grate protection, such as top mounted devices or filters that allow water but not sediment to enter the inlet.

N. Inlet Barrier
   1. Products listed under Drop Inlet Barriers, Pipe Inlet Barrier, or Curb Inlet Barrier that are approved by the Engineer, do not interfere with traffic operations or safety, and do not cause water to bypass inlet in high flows.
      a. The Engineer may approve the use of other best management grate protection, such as top mounted devices or filters that allow water but not sediment to enter the inlet.

Add the following to Section 01571, Part 3, Article 3.2:

J. Install the Gutter Inlet Barrier per manufacturer's instructions.
   1. For protection installed at sag locations, include gravel bags, fiber rolls or other check dams to filter and settle out sediment before entering the inlet.
   2. Any protection installed on combination grate and open curb inlets at non-sag locations should not obstruct high flows from going through the open curb portion of the inlet.
      a. Only the grate portion of the inlet should be protected.

K. Install the Inlet Barrier per manufacturer's instructions.

Replace Section 01571, Part 3, Article 3.5.A with the following:

A. Remove temporary sediment and erosion control devices as indicated below or as directed by the Engineer:
   1. Remove check dams in cut ditches when the areas draining to the cut ditch have been seeded and mulched or blanketed and the ditch has been permanently lined.
   2. Remove drop inlet and curb inlet protection when the areas draining to them have been stabilized.
   3. Remove silt fence and fiber rolls when the areas draining to them have been seeded and mulched or blanketed.
      a. Do not remove silt fence or fiber rolls protecting a wetland or waterway unless the surrounding area meets final stabilization requirements.

Supplemental Specification
2012 Standard Specification Book

SECTION 01571

TEMPORARY ENVIRONMENTAL CONTROLS

Delete Section 01571 and replace with the following:

PART 1 GENERAL

1.1 SECTION INCLUDES

A. Requirements for controlling erosion and preventing sediment laden runoff from leaving the construction site and areas under the Contractor's control.

B. Requirements for installing, inspecting, maintaining, and removing temporary erosion and sediment control measures.

C. Materials and procedures for installing and removing temporary environmental fencing.

1.2 RELATED SECTIONS Not Used

1.3 REFERENCES

A. AASHTO M 288: Geotextile Specifications for Highway Applications

B. UDOT Erosion and Sediment Control Field Guide

C. Utah General Permit for Discharges from Construction Activities No. UTRC00000.

1.4 DEFINITIONS

A. Check Dam – A fiber roll or stone structure placed across a ditch to slow velocity and intercept and trap sediment.

B. Drop Inlet Barrier – A fiber roll or silt fence placed around a drop inlet that intercepts and traps sediment.

C. Fiber Roll – A tube-like structure of encased natural materials used to intercept and trap sediment in a sheet flow situation.

D. Gutter Inlet Barrier – A protective barrier placed around a gutter inlet that intercepts and traps sediment before it enters the inlet.

E. Pipe Inlet Barrier – A barrier protecting a pipe inlet that intercepts and traps sediment before it enters the pipe.

F. Sediment Trap – An excavated basin usually installed at low points on a construction site that intercepts and traps sediment.

G. Silt Fence – A geotextile fabric fence used to intercept and trap sediment in a sheet flow situation.

H. Slope Drain – A polyethylene pipe placed on a slope to collect and transport storm runoff down the face of a slope until permanent drainage facilities are installed or vegetation growth is adequate.

I. Stabilized Construction Entrance – A layer of rock placed at a construction site entrance or exit that removes mud from vehicle tires to prevent tracking onto a paved road.

J Straw Bale Barrier – Straw bales placed end to end, used where a silt fence would fail. Install to intercept and trap sediment.

K. Temporary Berm – A ridge of compacted soil with or without a shallow ditch that diverts storm runoff from a slope to a controlled release point.

L Temporary Environmental Fence – A visual barrier used to delineate and prevent encroachment on sensitive areas.

1.5 SUBMITTALS

A. Submit a signed copy of the Notice of Intent (NOI) to the Engineer before beginning any earth disturbing activities on projects that disturb more than one acre.

B. Environmental Control Supervisor (ECS), Certificate of Training
   1. Certification to the Engineer that the ECS selected for the project has completed Department's online ECS training and passed the ECS examination.

1.6 PAYMENT PROCEDURES

A. Payment for the items associated with this section includes all costs for labor, equipment, and materials for installation, inspection, maintenance, and removal as required.

B. Work required by the ECS will be paid under that item when a bid item has been included in the contract for an ECS. Work listed in this Section will still need to be performed by the Contractor and paid under the individual erosion and sediment control measures when a bid item for an ECS is not included on the project.

C. Penalties
   1. Penalties are assessed against the Contractor in the amount of $500 for each calendar day or portion thereof the project is not in compliance with all required permits and regulations. The penalties assessed are increased to $1,000 per day if the Contractor remains in non-compliance after three days and increased to $1,500 per day if the Contractor remains not in compliance after seven days.
   2. Any fines issued by regulatory agencies against the Department are added to the penalty assessed to the Contractor.
   3. No extension of contract time is allowed for any delay resulting directly or indirectly from a violation of environmental requirements.

PART 2 PRODUCTS

2.1 MATERIALS

A. Check Dams
   1. Fiber Roll
      a. Use 12 inch diameter fiber roll selected from products included on the Department Approved Products List for Fiber Rolls.
      b. Wood Stakes – 1 inch square by 18 inches long.
      c. Channel Liner – Use products included on the Department Approved Products List for Channel Liners.
   2. Stone
      a. Angular, well-graded, within 2 to 6 inches in diameter.

B. Silt Fence
   1. Silt Fence Fabric – Refer to AASHTO M 288, Table 7 – Temporary Silt Fence Property Requirements
   2. Wood Post – Nominal 2 inch square by 4 ft long.
   3. Fasteners – Staples, wire, zip ties, or nails sufficient to maintain fabric attachment to post.

C. Fiber Roll
   1. Use 12 inch diameter fiber roll selected from products included on the Department Approved Products List for Fiber Rolls.
   2. Wood Stakes – Nominal 1 inch square by 18 inches long.

D. Slope Drain
   1. 12 inch diameter single wall polyethylene pipe
   2. Polyethylene end section
   3. Loose Riprap
   4. Wood Stakes – Nominal 2 inch square by 3 ft long.

E. Temporary Berm
   1. Existing Soil

F. Drop Inlet Barriers
   1. Fiber Roll
      a. Use 18 inch diameter fiber roll selected from products included on the Department Approved Products List for Fiber Rolls.
      b. Wood stakes – Nominal 2 inch square by 2 feet long.
   2. Stone – Angular, well-graded within 2 to 6 inch diameter.
   3. Silt Fence – Refer to AASHTO M 288, Table 6 – Temporary Silt Fence Property Requirements.
      a. Wood stud: 2 inches x 4 inches nominal.

G. Pipe Inlet Barrier
   1. Stone – Well-graded within 2 to 6 inch in diameter.
   2. Fiber Roll
      a. Use 18 inch diameter fiber roll selected from products included on the Department Approved Products List for Fiber Rolls.
      b. Wood stakes – Nominal 2 inch square by 2 ft long.

H. Curb Inlet Barrier
   1. Fiber Roll – 9 inch minimum diameter selected from products included on the Department Approved Products List for Fiber Rolls.
   2. Sand Bags – 14 inch x 26 inch, UV stabilized polypropylene bags, 50 lb capacity with attached ties.
   3. Sand

I. Sediment Trap
   1. Loose Riprap – Refer to Section 02373.

J. Stabilized Construction Entrance
   1. Stone – 2 to 3 inch diameter.

K. Straw Bale Barrier
   1. Straw Bales – Obtained from weed-free fields that have been certified by the Utah Department of Agriculture.

L. Temporary Environmental Fence
   1. Fence Fabric
      a. Polyethylene, high-density, UV stabilized
      b. Width, 4 ft minimum
      c. Color, Orange
   2. Posts
      a. Wood Post – Nominal 2 inch square by 4 ft long.
      b. Fasteners – Staples, wire, zip ties, or nails sufficient to maintain fabric attachment to post.

PART 3 EXECUTION

3.1 PERMIT COMPLIANCE

(Only for projects disturbing one or more acres of ground)

A. Complete the remaining sections of the Storm Water Pollution Prevention Plan (SWPPP) provided by the Department and sign the SWPPP before submitting the Notice of Intent (NOI).

B. Obtain permit coverage and renewals at the Contractor's expense under the Utah General Permit for Discharges from Construction Activities by completing and submitting the online NOI form located on the Utah Division of Water Quality web site. Refer to http://www.udot.utah.gov/go/standardsreferences.

C. Post documentation of permit coverage on the project site in a publicly assessable location.
   1. Include permit tracking number and contractor's contact name, phone number or email address or both.

D. Do not begin any earth-disturbing activity until the NOI form has been completed online and submitted to the Division of Water Quality.

E. Comply with the requirements of Utah General Permit for Discharges from Construction Activities – Permit No. UTRC00000. Refer to http://www.udot.utah.gov/go/standardsreferences

F. Modify the SWPPP whenever changes are made to the construction plans, stormwater control measures, pollution prevention measures, or other activities at project site that are no longer accurately reflected in the SWPPP.
   1. Document and sign the modifications in the SWPPP within 7 calendar days.

G. Install sediment control measures along the project perimeter and those protecting surface waters and wetlands before starting earth-disturbing activity.

H. Provide and maintain a 50-foot no disturbance buffer around surface waters or equivalent sediment control measures (See Permit 2.1.2) unless the project qualifies under a compliance alternative.

I. Obtain written approval from the Engineer to change the SWPPP.

J. Designate an ECS to work directly with the Engineer's designated ECS and be available as needed to coordinate the SWPPP, inspect and maintain erosion control devices, and resolve other sediment and erosion control issues.

K. Maintain a copy of the prepared SWPPP on the project site at all times and attach the following items as they occur through project construction:
   1. Any changes made to the SWPPP
   2. Inspection forms
   3. Corrective Actions

L. Minimize sediment trackout onto offsite streets, other paved surfaces, or sidewalks from vehicles exiting the construction site.

M. Follow the Permit if a conflict occurs between erosion and sediment control plans or specifications and the Utah General Permit for Discharges from Construction Activities.

3.2 INSTALLATION

A. The control measures in the SWPPP are illustrative.
   1. Adapt measures in the field to meet their intended purpose and implement appropriate control measures through all phases of the project.
   2. Make required changes to the SWPPP to accommodate construction sequencing with the approval of the Engineer.

B. Install additional control measures as directed by the Engineer.

C. Follow installation procedures outlined in the EN Series Standard Drawings and the UDOT Erosion and Sediment Control Field Guide.

D. Provide or construct control measures such as check dams, silt fence, slope drains, drop inlet barriers, sediment traps, and other sediment and erosion control devices or methods to reduce construction site erosion and prevent sediment laden runoff from leaving the site.

E. Initiate soil stabilization measures whenever earth-disturbing activities have permanently ceased on any portion of the site but in no case longer than 14 days.

F. Initiate soil stabilization measures whenever earth-disturbing activities have temporarily ceased on any portion of the site where grading, excavation, or topsoil placement operations will not resume for a period of 14 or more calendar days but such activities will resume in the future.

G. Document on the inspection form the date when earth-disturbing activities temporarily ceased on an area.

H. Refer to the Utah General Permit for Discharges from Construction Activities Part 2.2 for what defines initiation of stabilization.

I. Install temporary environmental fence in the required locations before construction activities begin.
   1. Install posts at a 12 ft maximum spacing so the fence does not sag more than 2 inches between posts.
   2. Weave the fence over the support posts alternating every two loops and secure it to the posts with fasteners.

3.3 INSPECTION

A. Inspect all denuded areas during construction to determine potential erosion problems. Apply control measures as required.

B. Conduct SWPPP inspections at least once a week upon beginning earth-disturbing activities and within 24 hours after any storm event ½ inch or greater. Conduct inspections at least once a month for areas that are temporarily or permanently stabilized and in cases where the ground is frozen, suspend inspections until thawing conditions begin to occur.
   1. Include the Engineer's ECS on all inspections.
   2. Complete a Division of Water Quality inspection form during each inspection and submit it to the Engineer within 24 hours of the inspection. Include the following information:
      a. Names of personnel attending and date of the inspection.
      b. List of problems identified in the previous inspection and note whether or not corrections have been made.
      c. List by location, all earth-disturbing activities since previous inspection.
      d. List by location, erosion and sediment control measures installed since previous inspection.

e. List by location, new and unresolved problems encountered with specific erosion control measures. Describe solutions to be implemented.

f. Sign the inspection form.

C. Accommodate inspections requested by regulatory agencies.

3.4 MAINTENANCE

A. Maintain sediment control devices to function properly until all disturbed areas draining to them are stabilized.

B. Remove and properly dispose of sediment when it has accumulated half way up the overall structure height or when it interferes with the performance of the structure.

C. Dispose of sediment removed from erosion control structures in a manner acceptable to the Engineer.

3.5 REMOVAL

A. Remove temporary sediment and erosion control devises as indicated below:

1. Remove check dams in cut ditches when the areas draining to the cut ditch have been seeded and mulched or blanketed and the ditch has been permanently lined.
2. Remove drop inlet and curb inlet protection when the areas draining to them have been stabilized.
3. Remove silt fence and fiber rolls when the areas draining to them have been seeded and mulched or blanketed. Do not remove silt fence or fiber rolls protecting a wetland or waterway unless the surrounding area meets final stabilization requirements.

B. Remove temporary environmental fence and posts upon completion of construction.

1. Temporary environmental fence and all components become property of the Contractor when construction is complete.

3.6 PERMIT CLOSE-OUT

(Only for projects that obtained a permit)

A. Obtain approval from Engineer through the Region Landscape Architect that all permit requirements for final close-out under the Contractor's control have been met before terminating the permit.

B. Close-out the Utah General Permit for Discharges from Construction Activities by submitting a Notice of Termination (NOT) form to the Division of Water Quality along with a signed copy to the Engineer on project locations that receive less than 20 inches of average annual precipitation.

C. Transfer the permit to the Department as directed by procedures identified in the permit on project locations that receive more than 20 inches of average annual precipitation and the project has not met final stabilization requirements upon project close-out.

END OF SECTION

August 8, 2016

SPECIAL PROVISION

PROJECT # S-I15-1(113)5
PIN # 12780

SECTION 01572M

DUST CONTROL AND WATERING

Delete Paragraph A, Article 1.6, "PAYMENT PROCEDURES" and replace with the following:

A. The Department will not pay separately for furnishing or applying water. This work is to be considered incidental to other items of work. Include all costs in other items of work.

August 8, 2016

SPECIAL PROVISION

PROJECT # S-I15-1(113)5
PIN # 12780

SECTION 01721M

SURVEY

Add the following to Part 3, Article 3.3:

C. Measure and calculate quantities for contract pay items measured or paid for by area, volume, percent of lump sum, or percent of plan quantity.
   1. Provide all computations, plots, and supporting documentation necessary for the Engineer to evaluate and verify quantities.
   2. Payment will be made based on accepted quantities.
   3. No additional payment will be made for providing computations, plots and supporting documents.

Supplemental Specification
2012 Standard Specification Book

SECTION 01721

SURVEY

Delete Section 01721 and replace with the following:

PART 1 GENERAL

1.1 SECTION INCLUDES

A. Construction surveying, staking, measurement, and calculations essential to complete the project and properly control the entire work.

B. Directed surveying as requested by the Engineer.

C. Processes and procedures for implementing Machine Control Guidance (MCG) technology. MCG uses Global Positioning System (GPS) and Robotic Total Station (RTS) in conjunction with three-dimensional computer models to determine the precise location and elevation of the materials being moved.

1.2 RELATED SECTIONS

A. Section 02765: Pavement Marking Paint

1.3 REFERENCES

A. Plan Sheet Development Standards

B. UDOT CADD Standards

C. UDOT Survey & Geomatics Standards Manual

D. Utah Administrative Code

E. Utah Code

1.4 DEFINITIONS **Not Used**

1.5 SUBMITTALS

A. The Department requires that all submittals be signed and sealed by a Professional Land Surveyor licensed in the State of Utah.

B. Re-submittals may be required depending on completeness and correctness of the work.

C. Submit a statement before award date indicating all Department provided horizontal and vertical survey control has been field checked and the control has been determined to be accurate within the tolerances specified in the UDOT Survey and Geomatics Standards Manual. Refer to http://www.udot.utah.gov/go/standardsreferences.
   1. Attach field survey information used to verify control.
   2. Notify the Engineer verbally and in writing if discrepancies are found.
   3. Include any additional survey points required to implement the MCG/RTS technology.

D. Provide a written description of the equipment before beginning work including calibration certifications, manpower, methods, and data storage format proposed for use to complete all survey activities.

E. Record keeping – Keep all field notes, diaries, and books according to standard surveying practice.
   1. Loose leaf books are not acceptable.
   2. Make available at any time all survey records including field notebooks and forms used for the work to the Engineer upon verbal or written request.
   3. Electronic records and reports are acceptable

F. Surveying and design data requirements:
   1. Return all survey and design data to the Engineer after project completion with compliance to the UDOT Survey and Geomatics Standards, Plan Sheet Development Standards, and UDOT CADD Standards. Refer to http://www.udot.utah.gov/go/standardsreferences.
   2. Complete the following if design plans were included with the advertising package for the project:
      a. Provide a red-lined hard copy plan set showing "As-built" features denoting changes from the original design.
      b. Provide an electronic copy of the red-lined 11 x 17 "As-built" plan, containing the “As-Built” stamp dated and signed by the Engineer, in a colored PDF format as follows:
         1) Resolution of not less than 400 dpi.

2) Individual file sizes not greater than 100 megabytes.
3) Group similar sheet types together into individual PDF files such as Summary Sheets grouped together in a single PDF file or Summary Sheets and Plan and Profile Sheets grouped together in a single PDF file.

3. Complete the following if the Department provides 3D elements, 3D models, or both at advertising:
   a. Provide all files, named and placed in accordance to the UDOT CADD Standards Manual, Plan Sheet Development Standards, and submitted into the UDOT Projectwise System.
   b. Update 3D model with "As-built" features denoting changes from the original design.
   c. Provide final model incorporating all design changes.
   d. Intermediate models at request of the Engineer.
   e. Support paperless inspection.
   f. Provide documentation of quality control measurements when requested by the Engineer.
   g. Submit completed "As-Built" electronic files into the UDOT Projectwise System in accordance with the UDOT Survey and Geomatics Standards, Plan Sheet Development Standards, and UDOT CADD Standards.
4. Submit an "As-Built" model with approval of the Engineer to document design changes if construction of a project was based on a model prepared by the Contractor or a project that was not designed using paperless methodology.

G. Survey Monuments
   1. Refer to this Section, article 3.12, paragraph C3 for submittal of drawings and notes.

H. Provide the following for MCG technology implementation:
   1. Written notification to the Engineer that MCG will be used on the project.
   2. Electronic or hand written stakeout/cut-fill reports or both for cross section stakes, according to this Section, Article 3.5.
      a. Reports are not required when measurement of work is by “Plan Quantity” or Weight.

I. Alternate methods of calculating quantities.
   1. Engineer may approve alternate methods of calculating quantities. Submit proposed alternate method of quantity calculation before beginning item of work.

1.6 MEASUREMENT PROCEDURES

A. Directed Survey – Use a survey crew measured by the hour authorized if extra survey work is needed. Department makes no additional payment for travel time to and from the project.

1.7 PAYMENT PROCEDURES

A. Include the costs in all items of work that require survey if contract does not include separate pay item for survey. Failure to comply with any portion of this specification may result in withholding up to 25 percent of contract payments until the deficiencies are corrected.

B. Directed survey work is paid for in the accepted quantities if needed and approved at a standard negotiated rate.

C. Include the costs of all machine control equipment in equipment cost. Include all survey equipment and labor in the bid item for survey.

1.8 QUALITY ASSURANCE

A. Assume responsibility for survey and control of the work and for correcting errors whether the errors are discovered during the actual survey work or in subsequent phases of the project and bears any cost overruns resulting from errors.

B. Perform all work according to the plans and specifications and standard Engineering and Surveying practices under the responsible charge of a Professional Engineer or Professional Land Surveyor licensed in the State of Utah.

C. The Engineer may spot check the work for accuracy and may reject unacceptable portions of work. Resurvey rejected work and correct work that is not within the specified tolerances at no additional cost to the Department.

D. Any 3D model used in conjunction with MCG must be verified by a Professional Engineer or Professional Land Surveyor licensed in the State of Utah.

E. Correct any construction errors that result from errors in a 3-D model once the design 3D model has been accepted.

PART 2 PRODUCTS

2.1 EQUIPMENT

A. Furnish tools, supplies, and stakes suitable for use in highway survey work.

B. Furnish stakes and hubs of sufficient length to provide a solid set in the ground with sufficient surface area above ground for necessary legible markings.

C. Furnish survey instruments and supporting equipment capable of achieving the specified tolerances.
   1. Calibrate survey equipment yearly and check for accuracy before beginning survey work and as required throughout the duration of the project. Make the calibration certificate available upon request by the Engineer.

2.2 EQUIPMENT FOR DEPARTMENT USE

A. Provide and maintain the following equipment when MCG is to be used on the project:
   1. GPS Capable Rover compatible with the other GPS equipment being used on the project.
   2. Other hardware and software associated with the equipment so that Department personnel can operate the equipment for quality assurance purposes.
   3. Provide adequate training so that Department personnel can operate the survey equipment.
   4 Make GPS rover available immediately upon request from the Engineer.
   5. Develop a process with the Department to check-in and check-out equipment from the Contractor.

PART 3 EXECUTION

3.1 PREPARATION

A. Discuss and coordinate the following with the Engineer before survey work begins:
   1. Required submittals
   2. Survey and staking methods
   3. Stake markings
   4. Grade control
   5. Referencing

6. Structure control
7. Any other procedures and control necessary for the work
8. Documentation procedures

B. Establish construction survey points, elevations, and grades as necessary to control layout and complete the work. Verify all control surveying and staking meet specified tolerances before beginning work.

C. Calculate all grades, elevations, offsets, and alignment data necessary for staking or setting items of work. Obtain approval from the Engineer for alternate methods of establishing grade control with wire lines, computer, or laser controlled grading or other suitable methods.

D. Provide appropriate traffic control for all survey activities.

E. The Department furnishes:
1. Horizontal and vertical control points
2. Cross sections developed during design, if any
3. Electronic project data
4. Digital Terrain Model used for design
5. 3-D data consisting of:
   a. LandXML files for the Design Digital Terrain Models, including features for projects implementing MCG
   b. LandXML files for the Design Alignments
   c. A Bentley iModel may be substituted for LandXML data.

F. Contract Provision Disclaimer
1. Provide a written request to the Engineer to obtain electronic data points.
2. Electronic data points are available in UDOT standard CADD formats only.
3. Data points are prepared by the Department for its own purposes and not for the benefit of private individuals or businesses.
4. Waive any claims that may result from the use of or reliance on the data points.
5. Indemnify the Department and hold it harmless for any damages, costs, attorney fees, or other liabilities that might be incurred as a result of the Department's use and reliance on the Contractor's modified data.

3.2 DIRECTED SURVEY

A. Conduct directed surveying if requested by the Engineer.
1. Includes work needed for changes and extra work. Provide all labor, materials, and equipment including total stations, global positioning system (GPS), LiDAR scanning or other equipment.

2. Obtain written authorization from the Engineer documenting the affected work and requirements before performing work under these items.

3.3 COMPUTATIONS AND PLOTS

A. Use cross-sections to calculate volume measurements.
   1. Superimpose final cross sections with original cross sections and calculate final quantities using the average end area method.
   2. Develop cross-sections from field measurements.
      a. Take cross section measurements both before and after excavation and before backfill.
      b. Take cross sections at a maximum centerline spacing of 15ft when the centerline curve radius is less than or equal to 500 ft.
      c. Take cross sections at a maximum spacing of 30 ft when the centerline curve radius is greater than 500 ft.
      d. Take additional cross sections at breaks in terrain and at changes in typical sections.
      e. Measure and record points at breaks in terrain for each cross section but at least every 15 ft unless otherwise approved by the Engineer.
      f. Measure and record points to at least the anticipated slopes and reference locations.
      g. Reduce all cross section distances to horizontal distances from centerline.
      h. Take cross sections at right angles to tangents and normal to curves.
      i. Include in cross sections all grades, locations, and existing ground line profiles.
   3. May develop cross sections from digital terrain models provided if:
      a. Ground survey locations do not exceed 50 ft in any direction.
      b. Major horizontal and vertical breaks in terrain are also included.
      c. Horizontal and vertical control for the project is used.
      d. DTM is verified accurate to required tolerances as indicated in the UDOT Survey & Geomatics Standards manual by spot checking throughout the length of the project. Refer to http://www.udot.utah.gov/go/standardsreferences to view this manual.

B. The Engineer may approve alternate methods of calculating quantities.

3.4 STAKE MAINTENANCE AND MARKINGS

A. Provide and maintain reference/location stakes that identify stationing at least every 200 ft until all work has been completed and accepted by the Engineer for each alignment.
   1. Provide reference/location stakes at whole station intervals such as 1032+00.

B. Maintain ALL staking necessary for the work until the construction has been completed and accepted by the Engineer.
   1. Legibly mark all survey stakes with station and offset referenced to their respective control line.
   2. Mark slope, reference, and guard stakes with station.
   3. Renew illegible or damaged stakes at no additional cost to the Department.

3.5 CONTROL POINTS AND SURVEY TOLERANCES

A. Survey using the guidelines set in the UDOT Survey & Geomatics Standards manual.
   1. Refer to http://www.udot.utah.gov/go/standardsreferences to view this manual.

B. Amend the survey control diagram as requested for the project.
   1. Have the amended diagram sealed, signed, and dated by a licensed surveyor in accordance with UC 58-22-601, 602, 603, and Utah Administrative Code R156-22-601.
   2. Refer to http://www.udot.utah.gov/go/standardsreferences for Utah Code and Utah Administrative Code.

C. Relocate initial horizontal and vertical control points in conflict with construction to areas that will not be disturbed by construction operations.
   1. Furnish the coordinates and elevations for the relocated points before the initial points are disturbed.
   2. Furnish to the Region Surveyor or Engineer the coordinates and elevations for the relocated points before the initial points are disturbed.

D. Protect benchmarks from construction activities.
   1. Position all benchmarks to allow a level rod to stand vertically and squarely on the mark.

E. Reference benchmarks to centerline and horizontal measurements. The surveyor should, to the extent necessary to achieve the standards contained herein:

1. Compensate or correct for systematic errors, including those associated with instrument calibration
2. Select the appropriate equipment and methods, and use trained personnel.
3. Use appropriate error propagation and other measurement design theory to select the proper instruments, field procedures, geometric layouts and computational procedures to control random errors.

F. The surveyor will apply appropriate procedures in order to assure that the allowable positional tolerance of such points is not exceeded if radial survey methods, GPS or other acceptable technologies or procedures are used to locate or establish points on the survey.

G. The positional tolerance may be tested by:

1. Comparing the relative location of points in a survey as measured by an independent survey of equal or higher accuracy or,
2. The results of a minimally constrained, correctly weighted least squares adjustment of the points on the survey.

H. The surveyor will employ, in his judgment, proper field procedures, instrumentation and adequate survey personnel in order to achieve a precision of 0.02 feet (or 6 mm) + 20 ppm.

1. See Table 1 for construction staking tolerances.

Table 1

CONSTRUCTION STAKING TOLERANCES		
Description	**Horizontal**	**Vertical**
	Decimals of a foot	
Box Culverts	± 0.02	± 0.02
Bridge Superstructures	± 0.02	± 0.02
Bridge Substructures	± 0.02	± 0.02
Clearing and Grubbing Stakes	± 1.00	-----
Construction Centerline Control	± 0.05	-----
Construction Centerline Station	± 0.10	-----
Curbs, Walks, and Bike Paths	± 0.03	± 0.02
Grade Stakes – Roadway Subgrade	± 0.20	± 0.05
Grade Stakes – Top of Rock	± 0.20	± 0.03
Grade Stakes – Roadway Finish	± 0.10	± 0.02
Luminaire and Signal Poles (incl.	± 0.20	± 0.20
Manholes, Inlets, and Culverts	± 0.10	± 0.03
PCC Pavement	± 0.10	± 0.02
Slope Stakes and References	± 0.30	± 0.10
Traffic Markings	± 0.20	-----
Walls – Retaining, MSE, Sound, etc.	± 0.05	± 0.05
Wetland Mitigation Control Stakes	± 0.20	± 0.20

Notes:

1. Stakes for miscellaneous items not listed above will have a horizontal and vertical tolerance of 0.20 ft, unless otherwise directed.
2. Features that are to be constructed flush to another surface should take on the same tolerance as that surface.
3. Staking tolerances for special circumstances will be discussed at the pre-survey meeting.
4. Meet the appropriate construction tolerances for the material as specified in the special provisions or standard specifications, regardless of the construction staking tolerances, specific to the work item.
5. Use bridge control once established, independent of other project controls for the duration of the bridge construction. Refer to Survey & Geomatics Standards manual for bridge control methodology. Refer to http://www.udot.utah.gov/go/standardsreferences.
6. Tolerances stated for each type of construction stake in this table indicates the acceptable deviation of the position of each reference point from its computed position relative to the given alignment and grade. Staked positions are generally checked using electronic stakeout reports and, if within tolerances, the stated position is accepted. Reference points may also have an accuracy relative to each other for precise measurements such as structures.

2. Survey Staking Methods:
    a. Furnish reference stakes for all slope stakes and stakes used for setting items for work.
    b. Furnish the following for projects using Conventional Survey Methods:
        1) Maintain the reference stakes for the duration of the project until the Engineer approves removal.
        2) Establish and set slope stakes and references on both sides of centerline at cross section locations.
            a) Place slope stakes at a maximum centerline spacing of 25 ft when the centerline curve radius is less than or equal to 500 ft.
            b) Place slope stakes at a maximum spacing of 50 ft when the centerline curve radius is greater than 500 ft.
            c) Place reference stakes at a maximum centerline spacing of 100 ft on tangents.
        3) Establish slope stakes in the field as the actual point of intersections of the design slope with the natural ground line.
        4) Set slope stake references outside the clearing limits.
        5) Include all reference point and slope stake information on the reference stakes.
3. Furnish the following for projects using Machine Control Guidance Methods:
    a. Maintain the reference stakes for the duration of the project until the Engineer approves removal.
    b. Establish and set location stakes and references on one side of centerline at cross section locations.
        1) Place cross section stakes at a maximum spacing of 300 ft. (Cross-section stakes reference physical points in the proposed cross-section, such as edge of pavement or top back of curb)
    c. Place slope stakes at a maximum spacing of 300 ft.
    d. Establish slope stakes in the field at the actual point of intersections of the design slope with the natural ground line.
    e. Set slope stake references outside the clearing limits.
    f. Include all reference point information on the reference stakes.
    g. Provide adequate bench marks throughout the project for construction equipment equipped with MCG to check setup and tolerances.
        1) Perform equipment checks at least once per day.
        2) Record equipment checks in a log for verification by the Engineer.

4. Staking limits – Reference/Location stakes can serve the purpose of the following staking requirements as long as all required information for both purposes can be written on the stake.
    a. Stake clearing limits on both sides of centerline at each established station.
        1) Locate the clearing limit on the ground as shown by the cut and fill limits on the plans.
    b. Stake right of way limits, or temporary construction easement (TCE) if one exists, every 500 ft maximum on tangents, every 250 ft maximum on curves where ROW is not delineated by existing fence lines or other obvious boundaries.
        1) Stake Right of Way limits at all right of way break/angle points along the right of way lines.
        2) Reduce the distance if staking distance is affected by line of sight.
    c. Stake environmental control limits on both sides of centerline at each established station.
        1) Locate the environmental control limits on the ground as shown by the slope rounding contours and environmental and silt fence locations as shown on the Plans.
        2) Stake environmental control limits every 25 ft in environmentally sensitive areas.
        3) Provide staking as needed to guarantee the silt fence is located inside of right of way in standard silt fence installations where stations/locations are not called out on the environmental control plan sheets,.

I. Furnish reference stakes for all slope stakes and stakes used for setting items for work.
    1. Accomplish the following for projects using ground based total stations, robotics, and levels. (Conventional Survey):
        a. Maintain the reference stakes for the duration of the project until the Engineer approves removal.
        b. Establish and set slope stakes and references on both sides of centerline at cross section locations.
        c. Place reference stakes at a maximum centerline spacing of 100 ft on tangents.
            1) Place slope stakes at a maximum centerline spacing of 25 ft when the centerline curve radius is less than or equal to 500 ft.
            2) Place slope stakes at a maximum spacing of 50 ft when the centerline curve radius is greater than 500 ft.

c. Establish slope stakes in the field as the actual point of intersections of the design slope with the natural ground line.
d. Set slope stake references outside the clearing limits.
e. Include all reference point and slope stake information on the reference stakes.

2. Accomplish the following for projects using Machine Control Guidance Methods:
   a. Maintain the reference stakes for the duration of the project Survey until the Engineer approves removal.
   b. Establish and set location stakes and references on one side of centerline at cross section locations.
      1) Place cross section stakes at a maximum spacing of 300 ft.
         a) Cross-section stakes reference physical points in the proposed cross-section, such as edge of pavement or top back of curb.
   c. Place slope stakes at a maximum spacing of 300 ft.
   d. Establish slope stakes in the field as the actual point of intersections of the design slope with the natural ground line.
   e. Set slope stake references outside the clearing limits.
   f. Include all reference point information on the reference stakes.
   g. Provide adequate bench marks throughout the project for construction equipment equipped with MCG to check setup and tolerances.
      1) Perform equipment checks at least once per day.
      2) Record equipment checks in a log for verification by the Engineer.

J. Setting grade finishing stakes (Conventional Survey or RTK):
   1. Grade elevations and horizontal alignment:
      a. On centerline.
      b. On each shoulder at roadway cross section locations and between centerline and shoulder with a maximum spacing of 25 ft.
      c. At the top of sub grade and the top of each aggregate course.
   2. Locations:
      a. Set stakes on centerline, on each normal shoulder, and on the shoulder of the turnout where turnouts are constructed.
      b. Set hubs at the center and along the edges of parking areas.
      c. Set stakes in all ditches to be paved.
   3. Maximum spacing between stakes along the alignment is 50 ft.
   4. Use brushes or guard stakes at each grade finishing stake.
   5. Reset grade finishing stakes as many times as necessary to construct the sub grade and each aggregate course.

K. Grade Verification (Machine Control Guidance)

1. The following procedure will only be applicable for verification of roadway layers for grade elevations and horizontal alignment.
   a. The Department will use the Contractor provided survey equipment listed above.
   b. The Department will verify elevations at the following locations:
      1) On centerline.
      2) On each shoulder at roadway cross section locations and between centerline and shoulder with a maximum spacing of 25 ft.
      3) At the top of sub grade and the top of each aggregate course.
2. Locations:
   a. On centerline, on each normal shoulder, and on the shoulder of the turnout where turnouts are constructed.
   b. At the center and along the edges of parking areas.
   c. At the top of subgrade and the top of each aggregate course.
   d. In all ditches to be paved.
3. The Department will verify and document elevations at a 300 ft maximum spacing between locations along the alignment.
   a. The Department reserves the right to increase the spacing between grade verification locations up to, but not to exceed, 1000 ft if a level of confidence can be attained by the Engineer.

3.6 CONCRETE PAVING

A. Develop a method of horizontal and vertical control for the placement of concrete pavement.

1. Use laser, wire, or string line, for example, to maintain horizontal and vertical control.
2. Maximum spacing, 50 ft Set control on both sides of roadway.

B. 3D Paving, Machine Control Guidance, Wireless Paver

1. Survey control should be staggered on either side of the highway to provide a good strength of figure.
   a. Typically the distance between control points set for MCG should be no farther than 650 ft. The actual distance may vary by the type of equipment used by the Contractor.
   b. The instrument setup must obtain vertical accuracies within ± 0.02 ft of the existing control.

C. Stake concrete joint and station stamp locations if requested by the Engineer.

3.7 DRAINAGE STRUCTURES

A. Stake drainage structures to fit field conditions and in coordination with the Engineer. The location of the structures may differ from the plans.
   1. Survey and record the ground profile along the centerline of the structure.
   2. Determine the slope catch points at inlets and outlets.
   3. Set reference points and record information necessary to determine structure length and end treatments.
   4. Stake ditches or grade to make the structure functional.
   5. Plot the profile along centerline of the structure to show the natural ground, the flow line, the roadway section, and the structure.
   6. Mark guard stakes with the following, when applicable:
      a. Diameter, length, and type of culvert such as 18 inch x 35 ft corrugated metal pipe (cmp)
      b. The vertical and horizontal distance from the hub to the invert at the end of the culvert or any intermediate point as needed or directed
      c. Flow line grade of the pipe
      d. Station
   7. Provide a reference at a maximum spacing of 50 ft for storm sewers and waterlines. Reference inverts of pipe at all manholes.

3.8 BRIDGES

A. Based upon the Projects Primary Control points, set at least 4 horizontal and vertical control reference points to be used for surveying all bridge substructure and superstructure components including but not limited to pile locations and cutoffs, line and grade for abutments, bents, beam seats, anchor bolts, and screed grades.

B. Set intermediate slope stakes at bridge abutments to establish transitions.
   1. Place finish grade stakes on the centerline of abutment bearing and at the top of slope of all bridge berms.
   2. Place finish grade stakes on each side at top, mid-point, or slope and toe of fill.

3.9 BOX CULVERTS

A. Set horizontal and vertical control and reference points.
   1. Establish and reference the centerline, back of parapet or barrier, skew, and flow line elevations at inlet, outlet, and breaks.

3.10 CURB AND GUTTER

A. Set curb and gutter staking at 25 ft intervals on tangent and 10 ft intervals on curve radii.

B. Set line and grade for curb and gutter within 0.02 ft of the proposed or established grade line.

3.11 GUARDRAIL

A. Stake guardrail vertical and horizontal control at a maximum spacing of 25 ft on tangent sections and 10 ft on curved sections unless otherwise approved.

B. Obtain the Engineer's approval and field verification of staking before installation.

3.12 EXISTING SURVEY MONUMENTS

A. Locate and reference all private and public land survey monuments that may be destroyed by project construction activities before disturbing those existing monuments and under the direction of a Professional Land Surveyor licensed in the State of Utah.

B. Complete referencing and reestablishing those existing monuments at no cost to the Department and before project completion.

C. Reference and reestablish the monuments created by the county surveyor.
   1. Notify the county surveyor at least 30 days before the destruction of any monument.
   2. Coordinate the reestablishment of section corner and quarter corner monuments with the county surveyor.
   3. Prepare a corner record to be filed in the office of the County Surveyor's Office per Utah State Code 17-23-17.5 unless prepared by the County Surveyor's Office.
   4. Submit a certified supplement to the Survey Control Sheet with notes to the Engineer showing references to section corners and quarter corners.

D. The Department pays for the additional work under the Directed Survey item if a monument is found during construction but is not shown on the contract plans and must be reset.

3.13 RETAINING WALLS

A. Set horizontal and vertical control and reference points based upon the Projects Primary and Secondary control.
   1. Establish and reference the centerline offsets for the walls, radius points, and the beginning and ending wall locations as shown on the plans.

B. Stake retaining wall vertical and horizontal control at a maximum spacing of 25 ft on tangent sections and 10 ft on curved sections unless otherwise approved.

3.14 PAVEMENT MARKING

A. Layout all temporary and permanent pavement markings according to Section 02765.
   1. Place references for traffic striping at least 150 ft apart on tangents and at least 50 ft on curves.

3.15 CLEANUP

A. Remove and dispose of all flagging, lath, stakes, and other staking material after the project is complete.

3.16 UTILITIES

A. Stake control lines as needed in cooperation with the utility companies so their facilities can be relocated to their proper final position.

B. Stake crossings or potential points of conflict between facilities to give proper horizontal and vertical control for the relocation.

C. Schedule this survey work with the utility companies to minimize delays and disruption of survey stakes.

D. Replace all disturbed stakes as necessary to facilitate the relocations.

E. The Contractor is responsible for costs incurred to relocate any utility more than once due to inaccurate or incomplete staking.

F. Collect survey grade coordinate data for all exposed, relocated, and new utilities during construction.
   1. Collect data in one foot intervals unless otherwise directed in the UDOT Survey & Geomatics Standards manual. Refer to http://www.udot.utah.gov/go/standardsreferences.

3.17 EXISTING MILEPOST SIGNS

A. Locate all existing milepost sign stations within the project limits.
   1. Contact the Engineer to determine any locations where a milepost sign was placed at a point other than the actual mile point due to prior physical limitations such as driveways, intersections, or bridge parapets, in coordination with Highway Referencing Specialist of the Asset Management Division.

B. Reestablish location of milepost signs before project completion if construction activities required removal of any existing milepost signs.
   1. Reset sign location at original station of existing sign.
      a. Exceptions
         1) Any prior physical limitations listed in this Section, Article 3.17, paragraph A were removed during construction and no longer prevent installation of a sign at the actual mile point.
         2) Roadside conditions or newly constructed physical limitations would prevent reestablishment of any milepost sign within 3 ft of its original station.
      b. Contact the Engineer to determine how to proceed in either of these special cases in this Section, Article 3.17, paragraph B1a, in consultation with the Highway Referencing Specialist.
   2. Establish an appropriate offset for each milepost sign to meet installation and clear zone requirements.

C. Contact the Highway Referencing Specialist through the Engineer to determine the preferred action for reestablishing the milepost signs where the alignment of the roadway was modified during construction to the extent that the new measured mile point locations of any milepost signs were shifted more than 10 ft from their original location.

END OF SECTION

August 8, 2016

SPECIAL PROVISION

PROJECT # S-I15-1(113)5
PIN # 12780

SECTION 01727S

PRECONSTRUCTION INSPECTION

Add Section 01727:

PART 1 GENERAL

1.1 SECTION INCLUDES

A. Conduct preconstruction inspections to depict existing interior and exterior conditions of buildings, utilities, underground structures and structural improvements, streets, sidewalks, and the like, within the area of influence of the work site.
   1. Existing buildings, utilities, and other related structural improvements and properties located in the area of influence of the work site are subject to possible damage as a result of heavy construction activities, including but not limited to excavation and paving operations.
   2. Inspect and identify conditions existing in and around the properties anticipated to be potentially affected by the construction operations.

1.2 RELATED SECTIONS Not Used

1.3 REFERENCES Not Used

1.4 DEFINITIONS

A. Area of Influence: That area in which structures and property are subject to possible damage as a result of heavy construction operations, including but not limited to, excavation, heavy equipment movement, filling, settlement, hauling, pile driving and compacting.

1.5 SUBMITTALS

A. Submit name and qualifications of Contractor's supervisor or subcontractor for Engineer's review.

B. Submit proposed Preconstruction Inspection Plan for Engineer's review.

C. Submit data, tapes, video, photographs and reports as indicated.

D. Submit type of photographic equipment and materials proposed for the work of this section.

PART 2 PRODUCTS

2.1 MATERIALS

A. Furnish photographic and/or video equipment and materials that can produce high quality detailed enlargements.
   1. Digital equipment can be used with images burned onto CD ROM, DVD, flash drive, or other suitable digital recording media.

PART 3 EXECUTION

3.1 GENERAL

A. Begin immediately upon Notice to Proceed and submit applicable portions of this inspection report and data to the Engineer for compliance review prior to the start of construction activities.

B. Inspect all properties within the areas recommended to be inspected.
   1. Submit any Contractor recommended deviations from those areas, if any.

C. Obtain the following data:
   1. List of owners, tenants and leasers to be inspected within buildings.
   2. Video all interior and exterior walls and ceilings clearly and precisely showing and describing any existing damage. Include retaining walls, driveways sidewalks, parking lots, and other ancillary structures that are at risk of damage due to construction activities.

D. After concurrence of the recommended area evaluation, conduct inspections, which adequately illustrate structural and cosmetic defects of the existing buildings and facilities within the indicated areas.

1. Contact the owner of the buildings to gain entry to the buildings for obtaining the necessary inspection data.
    a. If an owner will not permit access to the property, immediately notify the Engineer and indicate in a summary sheet form what efforts were made to gain entry, what reasons where given for not providing entry, time and date of contact, contact made in person or by phone, who made the contact, and other relevant information.
2. Record inspection data on video including narration.
    a. Record information so as to be easily interpreted and contain pertinent information and specific references to exact building areas and locations.
    b. Provide copies of photographs, video, reports and recordings as follows:
        1) Engineer – two sets video, written reports, summaries, and pictures.
        2) Contractor – one original set of videos, written reports, summaries, and pictures.
3. Identify the subject at the beginning and end of each video.
4. Provide other documentation and supporting data compiled and submitted in complete packages according to project section, property or improvement identification.
5. Prepare a brief summary sheet for each item inspected.
    a. The individual making the inspection and the Contractor will sign the summary.
    b. Distribute the summary sheet with the data as indicated above.
6. Include the following in the inspection reports:
    a. Type of construction and date when built.
    b. Differential settlements, visible cracks in walls, floors, and ceilings. Include estimate of settlement, length, width and depth of cracks.
    c. Any other apparent structural or cosmetic damage of defect.
7. Use positive dimensions whenever practical to do so instead of general terms (i.e., “Sagging 1 to 2 inches” instead of “Sagging badly”).

3.2 CONTRACTOR RESPONSIBILITIES

A. Evaluate existing damage to properties in the area of influence of the construction project that might be affected by the construction activities.

B. Submit detailed reports of structures inspected to be used in event of damage claim by owners.
   1. Provide copies to the Engineer.

C. Inspect all properties prior to construction and reexamine post construction damage of properties for which owners have reported damage.

D. Provide expert witness testimony in event that damage claims result in litigation.

3.3 RECOMMENDED AREAS TO BE INSPECTED

A. All structures, utilities, and improvements adjacent to I-15, through the work limits, within 300 feet of the roadway work.

B. The existing trail under the Virgin River bridges, within 200’ of the bridges.

C. The existing trail along the east side of I-15, within the project limits.

END SECTION

August 8, 2016

SPECIAL PROVISION

PROJECT # S-I15-1(113)5
PIN # 12780

SECTION 02056M

EMBANKMENT, BORROW, AND BACKFILL

Delete Article 2.1, paragraph A and replace with the following:

A. Provide materials free of contamination from chemical or petroleum products for embankment and backfill placements. Materials may include recycled Portland cement concrete, and asphalt pavement material.
   1. Do not include asphalt pavement materials in embankment or backfill below the water table.

Supplemental Specification
2012 Standard Specification Book

SECTION 02056M

EMBANKMENT, BORROW, AND BACKFILL

Delete Article 1.3, paragraph G and replace with the following:

G. UDOT Materials Manual of Instruction

H. UDOT Minimum Sampling and Testing Requirements

Delete Article 1.4, paragraph A and replace with the following:

A. Well-graded material – Material having an even distribution of different particle sizes. This even distribution of particles of different sizes results in a dense mass upon compaction.

Delete Article 1.5, paragraph A, and replace with the following:

A. Provide the following before delivering material to the project:
   1. Supplier and source of materials.
   2. Gradation analysis. Refer to AASHTO T 27 and T 11.
   3. Soil classification when applicable. Refer to AASHTO M 145.
   4. Maximum Dry Density and Optimum Moisture Determination
      a. Use AASHTO T 180 Method D for A-1 soils and AASHTO T 99 Method D for all other soils.

Delete Article 1.6, paragraph C, and replace with the following:

C. Density Requirements – Acceptance is on a lot-by-lot basis.
   1. Meet minimum density test average of 96 percent of maximum laboratory density with no single determination lower than 92 percent.
      a. Use AASHTO T 180 Method D for A-1 soils and AASHTO T 99 Method D for all other soils.
      b. Maintain appropriate moisture for compaction during processing.
   2. Meet 100 percent of established field density for free-draining granular backfill or for material with more than 30 percent retained on the ¾ inch sieve.
      a. Develop a field density compaction curve according to UDOT Materials Manual of Instruction Section 989 and approved by the Engineer.

Delete Article 2.9, and replace with the following:

2.9 PIPE FOUNDATION, BEDDING, AND BACKFILL

A. Pipe Foundation (When Required)
   1. Classification A-1. Refer to AASHTO M 145.
   2. Use suitable backfill material or granular backfill borrow when directed by Engineer.
   3. Use Free-Draining Granular Backfill or other uniformly graded materials only with the approval of the engineer and only if enclosed with an appropriate drainage geotextile. Refer to Section 02075.
   4. Over excavate and replace unsuitable materials according to Section 02317 when directed by the Engineer.

B. Pipe Bedding and Backfill
   1. Classification A-1. Refer to AASHTO M145.
   2. Non-plastic, well-graded material.
   3. Maximum aggregate size is 1½ inches for plastic pipe, 2 inches for all other pipes.

C. Other materials or trench configurations for pipe bedding and backfill may be used only upon approval of the Contractor's engineering proposal. Proposals using this option may include the use of native material or uniformly graded materials enclosed in an appropriate drainage geotextile. The Department decides whether or not to consider or approve the Contractor's engineering proposal. Any proposal must include all of the following:
   1. Stamped drawings and specifications signed and sealed by a Professional Engineer licensed in the state of Utah.
   2. Evaluation of site specific conditions and surrounding soils, including potential for migration of fines.
   3. A structural evaluation of the pipe support system for the proposed pipe that includes the pipe structural capacity and the depth of fill.
   4. Complete bedding or backfill source information including gradation, soil classification, and laboratory testing reports.

Delete Article 3.3, paragraphs C and D and replace with the following:

C. Structural Backfill Placement includes bridges, foundation, box culverts, drains, and other structures.
   1. Place suitable backfill material in structural backfill sections. Refer to Section 02317.
      a. Use granular backfill borrow when specified.
   2. Use appropriate compaction equipment adjacent to abutments, backwalls, approach slabs, wing walls, retaining walls, and other structures.

D. Pipe Foundation, Bedding, and Backfill
   1. Refer to Section 02317 and DG Series Standard Drawings for excavation and over-excavation requirements.
   2. Imported material for pipe bedding and pipe backfill and embankment in the pipe trench are incidental when constructed according to the plans and specifications. No separate measurement or payment for these items will be made except for pipe foundation work or other over-excavation of unsuitable material beyond the limits indicated in the contract.
   3. Place uniform layers of pipe backfill on both sides of the pipe.
   4. Use compaction equipment smaller than the trench width between the pipe and the trench wall. Expand the width of the trench to accommodate necessary compaction equipment.
   5. Fully compact the haunch areas. Hand-tamp areas where compaction equipment cannot compact the soil.

March 12, 2014

SPECIAL PROVISION

PROJECT # S-I15-1(113)5
PIN # 12780

SECTION 02072S

GEOGRID
(Sub-Grade Stabilization)

Add Section 02072:

PART 1 GENERAL

1.1 SECTION INCLUDES

A. Roadway and roadway embankment applications.

1.2 RELATED SECTIONS Not Used

1.3 REFERENCES

A. ASTM D 4354: Practice for Sampling of Geosynthetics for Testing

B. ASTM D 4355-05: Standard Test Method for UV and Weather Degradation

C. ASTM D 4759: Practice for Determining the Specification Conformance of Geosynthetics

D. ASTM D 5732-01: Standard Test Method for Determining Flexural Stiffness

E. ASTM D 5818: Practice for Obtaining Samples of Geosynthetics from a Test Section for Assessment of Installation Damage

F. ASTM D 6637: Standard Test Method for Determining Tensile Properties of Geogrids by the Single or Multi-rib Tensile Method

G. U.S. Environmental Protection Agency (U.S. EPA) EPA 9090: Compatibility Test for Wastes and Membrane Liners

H. GRI-GG2: Geosynthetic Institute Test for geogrids junction strength

1.4 DEFINITIONS

A. Geogrid – A biaxial polymeric grid formed by a regular network of integrally connected tensile elements with apertures of sufficient size to allow interlocking with surrounding soil, rock, or earth to function primarily as reinforcement.

B. Minimum Average Roll Value (MARV) – Value based on testing and determined according to ASTM D 4759.

C. Multi-Layer Geogrid – A geogrid product consisting of multiple layers of grid which are not integrally connected throughout.

D. Traffic Benefit Ratio (TBR) is also known as Traffic Improvement Factor or TIF – A ratio comparing the performance of a pavement cross-section with a geogrid-reinforced base course to a similar cross-section without geogrid reinforcement, based on the number of cycles to failure with failure defined as a selected depth of rut.

E. True Tensile Strength – True resistance to elongation when initially subjected to load measured via ASTM D 6637 without deforming test materials under load before measuring such resistance or employing “secant” or “offset” tangent methods of measurement.

F. Welded Strip geogrid – A geogrid product formed by heat bonding (welding) discrete strips of polymer into a regular network.

G. Woven Geogrid – A geogrid product formed by weaving discrete strips of polymer into a network.

1.5 SUBMITTALS

A. Submit geogrid product sample approximately 4 inches by 7 inches or larger. Refer to ASTM D 4354.

B. Submit geogrid product data sheet and certification from the Manufacturer that the geogrid product supplied meets the requirements of this Section, Article 2.2 including Table 1.

C. Submit Manufacturer’s installation instructions and general recommendations.

D. Submit the following to the Engineer at least 15 days before bid letting for alternate geogrid materials that do not meet the requirements of this Section, Article 2.2 including Table 1. The Engineer will respond within 10 days with a written justification to allow or disallow the requested alternate Geogrid. The

Engineer will consult with the Region Pavement Design Engineer to decide on and approve the materials.

1. Full-scale laboratory and in-ground testing of pavement structures, in the United State, reinforced with the specific geogrid that quantifies the TBR or structural benefit of the product. Include full-scale independent research to substantiate the benefits of submitted research. The geogrid benefit must meet or exceed that of the design geogrid.
2. A list of five comparable projects that are similar in terms of size and application, are located in the United States, and where the results of using the specific alternate geogrid material can be verified after a minimum of five years of service life.
3. A sample 4 x 7 inches or larger.
4. Recommended installation instructions.
5. Additional information as requested by the Engineer to fully evaluate the product.

1.6 DELIVERY STORAGE AND HANDLING

A. Storage and Protection

1. Prevent excessive mud, wet concrete, epoxy, or other deleterious materials from coming in contact with and affixing to the geogrid materials.
2. Store at temperatures above -20 degrees F (-29 degrees C).
3. Rolled materials may be laid flat or stood on end.
4. Do not expose geogrid materials to direct sunlight for a period longer than recommended by the manufacturer.

1.7 QUALITY ASSURANCE

A. Pre-Construction Conference – The Contractor will arrange a meeting at the site with the geogrid material supplier and where applicable, the geogrid installer before the installation of the geogrid. Notify the Owner and the Engineer at least three days in advance of the time of the meeting. A representative of the geogrid supplier must be available on an “as needed” basis during construction.

1.8 ACCEPTANCE

A. The Department rejects geogrid at installation if it has defects, rips, holes, flaws, deterioration, or damage incurred during manufacture, transport, handling or storage.

PART 2 PRODUCTS

2.1 GENERAL

A. Synthetic fiber net at least 85 percent by weight of polypropylene, polyethylene, or polyester.

B. Resistant to chemical attack, rot, and mildew.

C. No tears or defects that will adversely alter properties of product.

2.2 ROADWAY AGGREGATE GEOGRID – SUBGRADE IMPROVEMENT

A. Geogrids are a regular network of integrally connected polymer tensile elements constructed with aperture geometry sufficient to permit significant mechanical interlock with the surrounding soil or rock. Geogrids must also be dimensionally stable and able to retain their geometry under manufacture, transport, and installation.

B. Geogrids have the following properties:

Table 1

Geogrid Property Values for SUB-GRADE IMPROVEMENT Minimum Average Roll Values (MARV)					
Geogrid Properties	**Test Method**	**Type 1**		**Type 2**	
		Machine Direction MD[2]	**Perpendicular to Machine Direction XMD[2]**	**Machine Direction MD[2]**	**Perpendicular to Machine Direction XMD[2]**
Type of Geogrid		Punched and Drawn	Punched and Drawn	Punched and Drawn	Punched and Drawn
Rib Shape	Observation	Rectangular or Square	Rectangular or Square	Rectangular or Square	Rectangular or Square
Rib Thickness	Nominal Dimensions	Minimum - 0.03 inch	Minimum – 0.03 inch	Minimum - 0.05 inch	Minimum – 0.05 inch
Nominal Aperture Size	I.D. Callipered	1.0 - 1.3 inch	1.0 -1.3 inch	1.0 - 1.3 inch	1.0 - 1.3 inch
Tensile Strength@2% Strain	ASTM D 6637-09[1]	Minimum – 280 lb/ft	Minimum – 450 lb/ft	Minimum – 410 lb/ft	Minimum – 620 lb/ft
Tensile Strength@5% Strain	ASTM D 6637-09[1]	Minimum – 580 lb/ft	Minimum – 920 lb/ft	Minimum – 810 lb/ft	Minimum – 1340 lb/ft
Ultimate Tensile Strength	ASTM D 6637-09[1]	Minimum – 850 lb/ft	Minimum – 1300 lb/ft	Minimum – 1310 lb/ft	Minimum – 1970 lb/ft
Junction Efficiency[3]	GRI-GG2-05	93%		93%	
Flexural Stiffness[4]	ASTM 5732-01	250,000 mg-cm		750,000 mg-cm	
Aperture Stability[5]	Army Corp of Engineer(Tensional Rigidity)	0.32 m-N/deg		0.65 m-N/deg	
Resistance to Installation Damage[6]	ASTM D 5818-06, ASTM D 6637-09[1]	95 / 93 / 90 %AC/%SW/%GP		95 / 93 / 90 %AC/%SW/%GP	
Resistance to Long Term Degradation[7]	EPA 9090	100%	100%	100%	100%
Resistance to UV Degradation[8]	ASTM D4355-05	100%	100%	100%	100%

1. Resistance to elongation when initially subjected to load measured via ASTM D 6637 without deforming test materials under load before measuring such resistance or employing “secant” or “offset” tangent methods of measurement.
2. Unless indicated otherwise, values shown are minimum average roll values (MARV) determined in accordance with ASTM D 4759.
3. Load transfer capability determined according to GRI-GG2-05 and express as a percentage of the ultimate tensile strength.
4. Resistance to bending force determined according to ASTM D 5732-01, using specimens of width two ribs wide, with transverse ribs cut flush with exterior edges of longitudinal ribs (as a “ladder”) and of length sufficiently long to enable measurement of the overhang dimension. The overall Flexural Stiffness is calculated as the square root of the product of MD and XMD Flexural Stiffness value.
5. Resistance to in-place rotational movement measured by applying a 20 kg-cm(2m-N) moment to the central junction of a 9 inch X 9 inch specimen restrained at its perimeter according with the U.S. Army Corps of Engineers Mythology for measurement of Tensional Rigidity.
6. Resistance to loss of load capacity of structural integrity when subjected to mechanical installation stress in clayery sand (SC), well graded sand(SW) and crushed stone classified as poorly graded gravel(GP). The geogrids will be sampled according to ASTM D 5818-06 and load capacity will be determined according to ASTM D 6637-09.
7. Resistance to loss of load capacity or structural integrity when subject to Chemical aggressive environments according to EPA 9090 immersion testing.
8. Resistance to loss of load capacity or structural integrity when subject to 500 hours of ultraviolet light and aggressive weathering according to ASTM D 4355-05.

C. Acceptance Requirements – Base the actual minimum average roll values furnished by the manufacturer on representative test results from the manufacturing plant that produced the geogrid. Meet or exceed each of the specified minimum values. Clearly label all geogrids as being part of the same production run certified as meeting all applicable requirements.

PART 3 EXECUTION

3.1 GRANULAR BASE REINFORCEMENT

A. Place geogrid at the proper elevation and alignment as shown on the construction drawings. Provide minimum overlap per manufactures recommendations. Install geogrid according to the guidelines provided by the manufacturer or as directed by the Engineer. Geogrid may be temporarily secured in place with ties, staples, pins, sand bags, or backfill as required by fill properties, fill placement, weather conditions, or as directed by the Engineer.

B. Place, spread, and compact granular fill material in such a manner that minimizes the development of wrinkles in or movement of the geogrid.

C. A minimum loose fill thickness of six inches is required before operation of tracked vehicles over the geogrid. Keep the turning of tracked vehicles to a minimum to prevent tracks from displacing the fill and damaging the geogrid. Rubber-tired equipment may pass over the geogrid reinforcement at slow speeds (less than 10 mph) when integrally-formed geogrids are used if subgrade conditions permit. Do not use rubber-tired equipment directly on the geogrid when woven, multi-layer, or welded strip geogrids are used. Avoid sudden braking and sharp turning movements.

D. Replace at no additional cost to the Department any roll of geogrid damaged before, during, or after installation. Proper replacement consists of replacing the affected area and overlapping the geogrid one foot on all sides adjacent to the damaged area. Follow ASTM D 5818 for exposure and retrieval damages done during installation of evaluation samples.

3.2 PROTECTION

A. A minimum of six inches of fill cover is required if tracked vehicles are operated over geogrid.

END OF SECTION

October 17, 2016

SPECIAL PROVISION

PROJECT # S-I15-1(113)5
PIN # 12780

SECTION 02075M

GEOTEXTILES

Replace Article 2.2 with the following:

2.2 EROSION CONTROL GEOTEXTILE

A. Furnish Class 1, non-woven permanent erosion control geotextile according to AASHTO M 288 for all riprap applications.

B. For riprap applications with a D50 of 18 inches or larger, furnish geotextiles with a minimum weight of 12 ounces per square yard.

Supplemental Specification
2012 Standard Specification Book

SECTION 02075M

GEOTEXTILES

Delete Article 1.5 and replace with the following:

1.5 SUBMITTALS

A. Certification that the supplied material was manufactured, sampled, tested, and inspected in accordance with AASHTO M 288.

B. Manufacturer's data sheet and recommended installation instructions.

Delete Article 1.6 and replace with the following:

1.6 SAMPLING AND TESTING Not Used

Delete Article 2.3 and replace with the following:

2.3 DRAINAGE GEOTEXTILE

A. Furnish Class 2 nonwoven drainage geotextile according to AASHTO M 288.

Delete Article 3.4 and replace with the following:

3.4 INSTALL DRAINAGE GEOTEXTILE

A. Install at locations shown on the drawings or as designated by the Engineer.

B. Place and secure geotextile to provide direct contact against the excavated surface.

C. Overlap successive sheets of geotextile at least 1 ft in the down-gradient direction of flow.

D. Overlap geotextile at least 1 ft at the top of the trench, where applicable.

E. Place fill beginning with the sheets overlapped above subsequent sheets to hold geotextile in place.

F. Repair – Place patch over damaged area and extend 3 ft beyond the perimeter of the tear or damage.

August 8, 2016

SPECIAL PROVISION

PROJECT # S-I15-1(113)5
PIN # 12780

SECTION 02221M

REMOVE STRUCTURE AND OBSTRUCTION

Delete Article 3.5, paragraph C and replace with the following:

C. Remove structure
   1. Remove existing abutments 6 ft below finished grade.
   2. Remove existing piers to the depths/elevations shown in the plans.
   3. For all other locations, remove structure so that no remaining portion is closer than 3 ft to any watercourse or closer than 2 ft to the subgrade and embankment surface or within 2 ft of the natural ground surface.

Delete Article 3.17, Paragraph D and replace with the following:

D. Remove abandoned pipe or leave abandoned pipe and pipe culverts in place as shown in plans.
   1. Completely fill all abandoned pipe and pipe culverts to remain in place with flowable fill. Refer to Section 03575.

Add the following to Part 3:

3.24 CABLE BARRIER REMOVAL

A. Completely remove cable barrier and all appurtenances.

B. Maintain integrity of existing cable barrier beyond the removal limits.

C. Salvage the cable barrier system posts and hardware to UDOT Maintenance.
   1. Place the posts on pallets and band together.
   2. Coordinate with Todd Abbott (435-627-8643) for UDOT pickup of salvaged materials.
   3. Contractor retains ownership of cable.

3.25 OVERHEAD SIGN STRUCTURE REMOVAL

A. Remove overhead sign structure and all appurtenances.

B. Remove foundations to a minimum of 2 ft below subgrade or natural ground, and backfill.

3.26 WALL REMOVAL

A. Completely remove wall and all appurtenances.

B. Remove foundation to a minimum of 2 ft below subgrade or natural ground, and backfill.

September 6, 2016

SPECIAL PROVISION

PROJECT # S-I15-1(113)5
PIN # 12780

SECTION 02229S

TEMPORARY RETAINING WALLS

Add Section 02229:

PART 1 GENERAL

1.1 SECTION INCLUDES

A. Design, furnish materials, and construct temporary retaining walls.

1.2 RELATED SECTIONS

A. Section 02075: Geotextiles

B. Section 02221: Remove Structure and Obstruction

C. Section 02317: Structural Excavation

D. Section 03055: Portland Cement Concrete

E. Section 03211: Reinforcing Steel and Welded Wire

F. Section 03310: Structural Concrete

G. Section 05120: Structural Steel

1.3 REFERENCES

A. AASHTO LRFD Bridge Design Specifications, 7th Edition, with 2015 and 2016 Interim Revisions.

B. AASHTO LRFD Bridge Construction Specifications, 3rd Edition, with 2010, 2011, 2012, 2014, 2015, and 2016 Interim Revisions.

1.4 DEFINITIONS

A. Working Drawings – Drawings produced by the Contractor that supplement the contract drawings to provide information not included in the contract documents but that is required to fabricate, erect, transport, or temporarily support the structure or structural elements in the completion of the work.
   1. Working drawings do not supersede the contract drawings.

B. Approval of Working Drawings – Acceptance by the Department for use on the project. The Department will review working drawings for general conformance with the design concept and compliance with the contract documents. Review and approval do not relieve the Contractor from responsibility for errors, correctness of details, conformance to the contract, and the successful completion of the work.

1.5 SUBMITTALS

A. Submit Working Drawings and detailed engineering calculations, prepared and sealed by a Professional Engineer licensed in the State of Utah.
   1. Design temporary retaining walls according to the current edition of the AASHTO LRFD Bridge Design Specifications and the current edition of the AASHTO LRFD Bridge Construction Specifications.
   2. Certify that the Working Drawings and engineering calculations have been checked according to Department QC/QA Procedures.
   3. Prepare drawings according to the following:
      a. Submit drawings electronically in PDF format. Use 11 x 17 inch sheets with a 1½ inch blank margin on the left edge. Place the following information in the title block in the lower right corner of each sheet:
         1) State Project Designation
         2) State Project Name
         3) State Structure Number
         4) Contractor, Fabricator, or Erector Name
         5) Contractor, Fabricator, or Erector Drawing Number
         6) Contractor, Fabricator, or Erector Sheet Number
      b. Revise and resubmit drawings when directed by the Department.
      c. Provide the seal of a PE or SE licensed in the State of Utah when required in the contract. Place the seal in the lower right corner of each sheet when required.
   4. On the Working Drawings, state measures to be taken to prevent impacts on or interference with adjacent foundations, structures, utilities, and properties; including but not limited to impacts or interference from structural elements, settlements, and vibrations.
      a. Submit upper threshold values for settlement and vibration

for each structure.

b. For each event that may impact other structures submit results of monitoring within two calendar days to the Engineer.

c. Events that may impact other structures include but are not limited to pile installation, installation or removal of sheet pile, excavation, fill, compaction, etc.

5. Prepare engineering calculations according to the following:

a. Submit calculations electronically in PDF format. Use 8½ x 11 inch sheets with a 1 inch blank margin on the left edge or 11 x 17 inch sheets with a 1½ inch blank margin on the left edge. Title block location is at the top of 8½ inch by 11 inch sheets or the lower right corner of 11 x 17 inch sheets. Place the following information in the title block:

1) State Project Designation
2) State Project Name
3) State Structure Number
4) Contractor, Fabricator, or Erector Name
5) Contractor, Fabricator, or Erector Drawing Number
6) Contractor, Fabricator, or Erector Sheet Number

b. Provide the seal of a PE or SE licensed in the State of Utah on all engineering calculations. Place the seal on the calculation cover sheet.

c. Certify that engineering calculations have been checked according to the UDOT QC/QA Procedures.

6. Submit calculations that applied bearing pressures from temporary retaining walls do not exceed the supporting capacities of the soils.

7. Do not deviate from the approved drawings unless authorized in writing by the Engineer. Assume the responsibility for costs incurred due to faulty detailing or fabrication.

8. Show drivability analyses of any proposed piles or sheet piles.

B. Allow the Engineer 14 calendar days to review and approve working drawings and supporting calculations.

1. The Engineer may grant an increase in the number of working days for the project when that time is exceeded.

2. This review period applies each time the drawings and calculations are submitted.

C. Respond to Engineer's comments or revise and resubmit Working Drawings and engineering calculations as necessary to the Engineer's satisfaction.

PART 2 PRODUCTS

2.1 TEMPORARY RETAINING WALL TYPES

A. Use Sheet Piling, Soldier Piling, Soil Nailing, MSE Walls, Geotextile Reinforcing, Timber, or Cast-in Place Concrete.

PART 3 EXECUTION

3.1 TEMPORARY RETAINING WALL CONSTRUCTION

A. Follow the requirements of Section 02075, 03055, 03211, 03310, and 05120 for construction of temporary retaining wall.

B. Follow the requirements of Section 02221 for removal of existing bridge structure and obstruction. Follow the requirements of Section 02317 for structural excavation.

C. Construct temporary retaining walls on solid foundations that are safe from undermining, protected from softening, and capable of supporting the loads that will be applied.

D. If subgrade soils are not sufficiently stable, perform necessary subgrade stabilization or other mitigation measures.

E. Contractor is responsible for the stability of all temporary retaining walls.

F. Monitor settlements induced by construction of temporary retaining walls.

3.3 REMOVAL

A. Remove temporary retaining wall (down to 4 feet below finished grade line) prior to final inspection.

END OF SECTION

October 17, 2016

SPECIAL PROVISION

PROJECT # S-I15-1(113)5
PIN # 12780

SECTION 02316M

ROADWAY EXCAVATION

Add the following to Part 3:

3.10 DELINEATOR REMOVAL

A. Remove existing delineators within the limits of the project roadway excavation.

B. Salvage Shur-Tite delineators to UDOT Maintenance.
   1. Coordinate with Todd Abbott (435-627-8643) for UDOT pickup of salvaged materials.

3.11 RIVER EXCAVATION

A. Submit river excavation plan to Engineer for approval prior to beginning work in river.
   1. Comply with requirements in Section 00555M.
   2. Plan includes temporary channel relocation, dewatering / water treatment, and all other work to complete excavation.

B. Includes all river grading and excavation needed to remove, stockpile, and place material needed to temporarily move the channel, dewater, install riprap, backfill channel, finish grade channel and bank areas, compact native backfill, track material, prepare for seeding, and waste excess material appropriately.

C. Use native sandy / silty river excavation material for filling in voids for voidless riprap and for compacted native backfill above riprap and around bridge columns.

D. Use native river excavation material, including some larger material, in areas requiring compacted native backfill along riverbanks.

E. Place material in lifts no greater than 18 inches and compact the backfill material with a compactor or by driving on it with heavy equipment as approved by the Engineer. Produce a dense layer without voids.

F. Prepare the surface for seeding by placing finer material on top 4 to 6 inches and track to reduce erosion risk.

G. Remove and dispose of material that is too large to place properly in these areas.

Supplemental Specification
2012 Standard Specification Book

SECTION 02316M

ROADWAY EXCAVATION

Delete Article 3.5, paragraph C and replace with the following:

C. Remove material in all cut sections to the depth shown. Scarify to an 8 inch depth and compact subgrade to at least 90 percent of maximum laboratory density before placing pavement section.

Supplemental Specification
2012 Standard Specification Book

SECTION 02317M

STRUCTURAL EXCAVATION

Delete Article 1.4 and replace with the following:

1.4 DEFINITIONS

A. Unsuitable material – Material not meeting specifications, organic materials, frozen lumps, soils such as peat or bog, and over-saturated silts, clays, or sands whose water content prevents appropriate compaction.

October 17, 2016

SPECIAL PROVISION

PROJECT # S-I15-1(113)5
PIN # 12780

SECTION 02371S

FLEXIBLE CONCRETE BLOCK MAT

Add Section 02371:

PART 1 GENERAL

1.1 SECTION INCLUDES

A. Materials and procedures for installing flexible concrete block mat for erosion control.

1.2 RELATED SECTIONS

A. Section 02075: Geotextiles

B. Section 02376: Steep-Slope Erosion Control and Flexible Channel Liner

C. Section 02912: Topsoil

D. Section 02922: Seed, Turf Seed and Turf Sod

1.3 REFERENCES

A. ASTM D 6460: Standard Test Method for Determination of Erosion Control Blanket (ECB) Performance in Protecting Earthen Channels from Stormwater-Induced Erosion

B. ASTM D 7277: Standard Test Method for Performance Testing of Articulating Concrete Block (ACB) Revetment Systems for Hydraulic Stability in Open Channel Flow

C. ASTM C 33: Concrete Aggregates

D. ASTM C 150: Portland Cement

E. ASTM C 207: Hydrated Lime Masonry Purposes

F. ASTM C 595: Blended Hydraulic Cements

G. ASTM C 618: Coal Fly Ash and Raw or Calcined Natural Pozzolans for use in Portland Cement Concrete

1.4 DEFINITIONS

A. Flexible Concrete Block Mat – A matrix of concrete blocks permanently connected by geometric interlock, cables or geogrid.

1.5 SUBMITTALS

A. Manufacturer's product data, specifications and installation/anchoring instructions and details, for approval.

B. Certification that product meets ASTM D 7277 or D 6460.

C. Verification that the concrete blocks meet the requirements in this Section.

PART 2 PRODUCTS

2.1 FLEXIBLE CONCRETE BLOCK MAT

A. For closed-cell blocks provide a minimum open area of 8% and a maximum of 12%. For open-cell blocks provide a minimum open area of 10% and a maximum open area of 20%

B. Use a product with a minimum permissible sheer stress of 15 lb/ft^2 and a minimum permissible velocity of 13 fps on its own (without any vegetation growth).

C. Turf reinforcement mats and high performance turf reinforcement mats are not acceptable for this application.

2.2 CONCRETE BLOCKS

A. Cementitious Materials are to conform to the following ASTM Specifications:
   1. ASTM C 33
   2. ASTM C 150
   3. ASTM C 207
   4. ASTM C 595
   5. ASTM C 618

B. Minimum 28-day compressive strength 4,000 psi.

C. Air Entrainment 4-7%

D. Do not cast blocks on site.

2.3 EROSION CONTROL BLANKET AND GEOTEXTILES

A. Integrated with the flexible concrete block mat or placed prior to installation of the flexible concrete block mat, as per manufacturer's recommendations and as per UDOT Standard Specifications 02075 and/or 02376, as applicable.

PART 3 EXECUTION

3.1 PREPARATION

A. Complete all required grading, topsoil placement and seeding prior to placement of the mat.
   1. Subgrade is to have a smooth and unyielding foundation free of rocks or debris of any kind.
   2. Alignment is to have no abrupt grade breaks.
   3. Verify that the Engineer has provided written approval of seed incorporation. Refer to Section 02922.

B. Place topsoil and seeding under closed-cell blocks and in open-cell blocks to prevent erosion of topsoil and seeds after installation.

C. Install closed-cell mat within 24 hours after seeding or before precipitation falls. Replace eroded material, rework the soil, and reseed before installing the mat, if any soil erosion occurs.

3.2 INSTALLATION

A. Install and anchor mats according to the manufacturer's requirements.

B. Anchor and/or key-in edges of mat as per manufacturer's recommendations and as shown in plans.

C. Anchor and/or key-in mat to adjacent concrete structures or slope paving as per manufacturer's recommendations and as shown in plans.

END OF SECTION

October 17, 2016

SPECIAL PROVISION

PROJECT # S-I15-1(113)5
PIN # 12780

SECTION 02373M

RIPRAP

Add the following to Article 2.1:

F. Voidless Riprap: Consists of loose riprap with sandy / silty material forced into the voids between the rocks to create a void free riprap layer.

Add the following to Part 3:

3.6 INSTALL VOIDLESS RIPRAP

A. After the Engineer gives acceptance of the loose riprap, fill the voids of the riprap. Using water jetting or other approved method, fill all the voids with native sandy / silty river excavation material.

B. Apply the material in small enough lifts that the water forces the material into the lowest unfilled section of riprap.

C. Apply additional lifts, if voids appear after the material dries or settles. The finished product must be free of voids throughout the entire riprap layer.

D. Do not place compacted native backfill layer over the voidless riprap until authorized by the Engineer.

E. Collect and treat the runoff water, before it enters the river, with an appropriate trench or dewatering method in compliance with Section 00555M.

Supplemental Specification
2012 Standard Specification Book

SECTION 02373M

RIPRAP

Delete Article 2.1, Paragraph D and replace with the following:

D. Loose Riprap – Stones well graded in size throughout the riprap layer to produce a dense mass.
   1. The riprap layer thickness to be at least 1.5 times the median stone diameter (D_{50}). The diameter of any given stone is based on the middle dimension of the stone (not the longest or the shortest).
   2. Refer to Table 1 for gradation limits.
   3. Control of gradation will be by sample measurement or by visual inspection, as determined by the Engineer.

Table 1

Rock Riprap Gradation Limits	
Stone Diameter Range (ft)	Percent of Gradation Smaller Than
$1.5D_{50}$ to $1.7D_{50}$	100
$1.2D_{50}$ to $1.4D_{50}$	85
$1.0D_{50}$ to $1.15D_{50}$	50
$0.4D_{50}$ to $0.6D_{50}$	15
$0.1D_{50}$	10

October 13, 2016

SPECIAL PROVISION

PROJECT # S-I15-1(113)5
PIN # 12780

SECTION 02455M

DRIVEN PILES

Delete Article 3.3, paragraph A and replace with the following:

A. Pre-drill or pre-auger a minimum depth of 25 feet from the bottom of abutment elevations shown in the plans. Adjust pre-drill/pre-auger length as determined in the field by the Engineer.
   1. Do not drill holes greater in diameter than the diameter or other maximum dimension of the pile.

October 24, 2016

SPECIAL PROVISION

PROJECT # S-I15-1(113)5
PIN # 12780

SECTION 02466M

DRILLED SHAFTS

Add the following to Part 1:

1.8 ADDITIONAL PAYMENT

A. The Department will not consider extra payment of Drilled Shafts until amount of work exceeds twenty percent (20%) of contract bid amount.
   1. Bore logs' summary of subsurface conditions at the time of excavation will differ at other locations, and should be used for information only.
   2. If Contractor requests additional payment, the Department will negotiate for payment above the 20% of item bid amount.
   3. No additional payment will be made between zero (0%) and 20% for additional work.

September 5, 2016

SPECIAL PROVISION

PROJECT # S-I15-1(113)5
PIN # 12780

SECTION 02467S

JET GROUTING

Add Section 02467:

PART 1 GENERAL

1.1 SECTION INCLUDES

A. Material, equipment, and procedures for jet grouting.

1.2 RELATED SECTIONS

A. Section 00555M. Prosecution and Progress

B. Section 03055: Portland Cement Concrete

1.3 REFERENCES

A. AASHTO M 85: Portland Cement

B. AASHTO M295: Standard Specification for Coal Fly Ash and Raw or Calcined Natural Pozzolan for Use in Concrete

C. AASHTO T 106: Compressive Strength of Hydraulic Cement Mortar

D. ASTM C150: Portland Cement

E. ASTM C618: Standard Specification for Coal Fly Ash and Raw or Calcined Natural Pozzolan for Use in Concrete.

F. ASTM C989: Standard Specification for Ground Granulated Blast-Furnace Slag for Use in Concrete and Mortars.

G. ASTM D1633: Standard Test Method for Compressive Strength of Molded Soil-Cement Cylinders.

H. ASTM D420: Core Samples, Core Sample Testing Standard Guide to Site Characterization for Engineering, Design, and Construction Purposes.

I. ACI 233R: Slag Cement in Concrete.

J. API Recommended Practice 13B-1: Standard Procedures for Field Testing Water Based Drilling Fluids

1.4 DEFINITIONS

A. Jet Grouting: An in-situ injection technique employed with specialized equipment that includes grout pump(s), grout mixer, drill rig, drill rods and injection monitor with horizontal radial nozzles delivering high velocity fluids to erode, mix, and stabilize in-situ soils using an engineered grout slurry.

B. Single Fluid Jet Grouting: The jet grouting technique where a single fluid, typically neat cement grout, is injected at high velocity through horizontal radial nozzle(s) to directly erode, and mix with, the in-situ soil.

C. Double Fluid Jet Grouting: The jet grouting technique where one fluid, typically neat cement grout, is injected at high velocity through horizontal radial nozzle(s) and is assisted by a second fluid, typically air, delivered through a coaxial nozzle(s), to directly erode and mix with the in-situ soil.

D. Triple Fluid Jet Grouting: The jet grouting technique where one fluid, typically water, is injected at high velocity through horizontal radial nozzle(s) and is assisted by a second fluid, typically air delivered through a coaxial nozzle(s), to erode the in-situ soil, while a separate nozzle placed lower on the monitor delivers a third fluid, typically neat cement grout, at lower velocity to simultaneously fill the soil zone eroded by the cutting fluids (air and water).

E. Monitor (adjusted for single, double, and triple systems): A single, double, or triple fluid drill pipe attached to the end of a drilling string and designed to deliver one to three elements of the jet grouting process, typically air, water, and grout. The monitor has one or more injection points (nozzles).

F. Jet Grouting Supervisor: The individual on site who is in responsible charge for the jet grouting work.

G. Soil-Cement: Mixture of grout slurry and in situ soils formed by the jet grouting process.

H. Soil-Cement Element: A column, or panel (planar shape), of soil-cement formed by jet grouting, used as a component of a soil-cement structure.

I. Soil-Cement Structure: A single zone or block of jet grout elements that are partially or fully interlocked as indicated on the plans.
   1. Soil cement structures are comprised of soil cement elements of sufficient pattern and spacing as to stabilize the soil mass within the limits shown on the plans to meet the performance requirements specified in this section.

J. Fresh-In-Fresh sequence: Method that involves jet grouting elements successively without waiting for the grout to harden in the overlapping elements.

K. Primary-Secondary Sequence: Method in which installation of an overlapping element cannot commence before a specified hardening time or achievement of predetermined strength of the adjacent previously constructed element(s).

L. Spoil Return: All materials including, but not limited to: liquids, semi-solids, and solids, which are discharged above ground surface during, or as a result of jet grouting.

M. UCS: Unconfined Compressive Strength at 28 days

1.5 SUBMITTALS

A. The Engineer will approve or reject the Contractor's qualifications within 15 calendar days after receipt of a complete qualifications submission.
   1. Additional time required due to incomplete or unacceptable submittals will not be cause for time extension or impact or delay claims.
   2. All costs associated with incomplete or unacceptable submittals are at the expense of the Contractor.

B. Submit the following qualifications, equipment details, mix design, field demonstration test program details, jet grouting procedure, spoil and waste management plan, and quality assurance/quality control plan to the Engineer two weeks prior to the start of the work:
   1. A list of at least five (5) previously completed projects for review by the Engineer.
      a. The list includes a description of the project location, scope and magnitude, and contact person with phone number.
   2. A list of at least five (5) previously completed projects of similar scope and purpose for review by the Engineer.
      a. The list includes a description of the project, relative size, and contact person with phone number.

3. Resumes of the management, supervisory, and key personnel, for review by the Engineer in accordance with qualifications of article above.
4. Submit manufacturer's equipment specifications with details of grout mixers, pumps, drill rigs, and a plan view of the jet grout equipment arrangement, noting any equipment that has been modified or is of unique construction.
5. Submit copies of field data collection forms, including a sample of the report form proposed for use by the Contractor prior to the start of work.
6. Submit a mix design for the project indicating sources and types of grout materials, with volumetric proportions, and field test data from previous projects or from pre-construction grout material trials indicating set time and compressive strength achieved.
7. Submit method for verifying grout mix proportions.
8. Submit details of proposed field demonstration test program for jet grouting, including location of test columns, layout of test pattern, jet grouting parameters to be used and variables to be tested during test program, and details of proposed quality control/quality assurance testing to meet acceptance criteria.
9. Following performance of the field demonstration test program and prior to beginning production jet grouting operations, submit details regarding drilling and installation of test columns, jet grouting parameters, quality control/quality assurance test results, and recommended changes to jet grouting parameters based on test program, if applicable.
10. Submit a general Work Procedures Plan outlining the spacing, location, depth and general sequence to achieve the specified criteria detailed in this guideline.
    a. Dimensionally reference grout hole locations to the plans and show on layout sheets of suitable scale to effectively indicate the details of the layout.
11. Plan location and details of proposed temporary excavations, and subsequent engineering analysis, if warranted.
12. A general jet grout spoil return management plan outlining waste containment methods during jet grouting and treatment and removal plans for jet grout spoil return.
    a. No spoils or wastewater may contaminate the soils or water in the river bottom.
13. Quality assurance, quality control and verification procedures to be used for the field test and production work.
    a. This includes details of the procedures to obtain soil-cement samples and manufacturer's material and/or equipment specifications of the soil-cement sampling device and curing boxes.

b. Proposed details and formats of all required tabular and graphical data presentations that will be submitted to the Engineer during the course of the Work.
   1) This will include submittal of a copy of the reports used for data monitoring and recording.

C. Within one business day of a work shift, submit summary daily reports during test and production jet grouting that provide the information listed below.
   1. Jet grout element number.
   2. Time and date of beginning and completion of each grout element, including interruptions to the jetting process or material supply.
   3. Grout mix data, including mix proportions and unit weight density measurements.
   4. Injection pressure of all fluids used to construct each grout element.
   5. Flow rates of all fluids used to construct each grout element.
   6. Rates of rotation and withdrawal of jet rods for each grout element.
   7. Total grout quantity used for each element.
   8. Top and bottom elevations of the jet grout element.
   9. Continuous flow of spoils return.
   10. Continuous recording of jet grouting parameters are provided for each production column to verify consistency with the approved test program results.

PART 2 PRODUCTS

2.1 MATERIALS

A. The grout slurry may consist of a homogeneous mixture of any of the following materials:
   1. Cement, Portland, type V, ASTM C150 or AASHTO M85.
   2. Ground granulated blast furnace slag per ACI 233R or ASTM C989-99.
   3. Flyash Class C or F, ASTM C618 or AASHTO M295.
   4. Potable Water or approved other source is free of deleterious materials that may adversely affect the grout.
   5. Bentonite, if used, should be prepared according to the supplier’s recommended procedures for proper hydration.
   6. The ratios of the material components are proposed by the Contractor, confirmed during the preconstruction test program, and reviewed by the Engineer.
      a. Once accepted, grout slurry composition cannot be changed unless requested in writing by the Contractor and accepted in writing by the Engineer.

2.2 EQUIPMENT

A. General: All equipment used for drilling boreholes; lowering, raising and rotating jet monitors; mixing grout; supplying pressurized grout and air-water to jet monitors; and jet monitors have proven performance records for use in jet grouting work.

B. Drilling Equipment: Use drilling equipment of a type and capacity suitable for drilling required hole diameters and depths, and lowering, raising, and rotating jet grout monitors to the depths and at the rates required to perform the work as shown on the plans and as specified in this section.
   1. Provide a drill rig equipped with automated controls to regulate and maintain consistent rod retraction rate, and rod RPM and with pressure gauges for all fluids injected.

C. Grout Mixing and Injection Equipment: Use grout mixers and holding tanks, water tanks, air compressors, and pumps of sufficient capacity to ensure adequate supply of grout, air, and water at required pressure to the jet grouting monitors during a full work shift to produce grout elements of the quality and dimensions necessary.

D. Jet-Grouting Pump: Use pump, with the nozzles proposed, capable of providing the required velocity and a delivery rate adequate for the execution of the work.

E. Compressor (for double and triple jet-grouting): Capable of producing the pressure and to deliver the flow rate values proposed by the contractor depending on the parameters chosen.

F. Filling Grout Pump (for triple jet-grouting): Capable of producing the pressure and to deliver the flow rate values proposed by the Contractor depending on the parameter chosen.

G. Jet Grout Tools: Use jet grouting monitors with appropriate nozzles with the capacity suitable for producing jet grout elements in the soil types identified during subsurface explorations performed at the site, and of the size and depth shown on the plans and as specified in this section.
   1. Provide a drill hole diameter sufficiently large to be a clear path for continuous spoil return during all jetting operations.

H. Equipment Instrumentation: Provide instrumentation that allows continuous monitoring and automatic recording of data throughout the jet grouting operations. As a minimum, provide the following versus depth:
   1. Pressure gauges/devices at the drilling rig to automatically record pressures of cement grout, water, and air during the grouting process.
   2. Flow meter(s) to monitor and record the rate and total volume of grouting fluids through the grouting monitor at every element.
   3. Devices that automatically monitor and record the rate of monitor rotation and withdrawal.

PART 3 EXECUTION

3.1 TEST PROGRAM

A. Prior to production work, conduct a test program in accordance with the accepted work plan.
   1. The test program is used to optimize the various parameters including type of jet-grouting (single, double or triple), necessity of pre-jetting with water, grout mix composition, fluid(s) flows and pressures, rotational speed, retraction rate, grout, and number and size of nozzles; and confirm that resultant in situ soil-cement properties meet required design criteria.

B. The test program and its results will be observed and reviewed by the Engineer.
   1. Install the test program in area shown in the plans.

C. Each test section consists of elements suitable to demonstrate feasibility and installed to the same bottom elevation specified for the production jet grouting work.

D. Expose the test elements by excavation (where possible) and measure for geometric properties.
   1. If full-depth excavation is not feasible, drill samples or use other testing methods to demonstrate column size/geometry.
   2. In cases where excavation is not be possible, core the center of a single column or centroid of a group of three (3) elements. Send three acceptable/representative specimens from each column to an independent Laboratory for the tests required to satisfy the design criteria.
   3. Alternative testing methods may be proposed by the Contractor.

E. Subject to the results of the test program, the jet grouting contractor will present parameters selected to achieve the specified acceptance criteria for review of the Engineer.
   1. The Contractor, at their expense, may be required to repeat the construction of a test section, if selected parameters fall outside test requirements.
   2. The test program confirms that the resultant soil-cement properties met the required design criteria prior to the Contractor proceeding with production work.

3.2 PRODUCTION WORK

A. Execute production jet grouting using the same jet grout tooling, materials, and procedures as demonstrated from the satisfactory set of test elements.

B. Install jet grout elements, such that continuous spoil return up the borehole annulus is achieved during all work.

C. The sequence of the jet-grouting, primary and secondary, fresh on fresh, pre-jetting with water is the responsibility of the jet grouting contractor and will be based on the results of the successful test program.

D. Maintain a clean site and dispose of all spoil debris, water, and spilled material during jet grouting operations.

E. Place equipment for mixing, holding, and pumping grout in a secure location. Operate equipment to minimize spillage of material.
   1. No material will be allowed to enter storm drains or other drainage courses.

F. Monitor nearby grade, structures and utilities during all jetting work.

G. Field locate subsurface utilities and notify utility companies of work scheduled near the utility per Section 00555M.

H. If jet-grouting is interrupted during the execution of a column, re-start jetting at least 6 inches below the stopping point.

I. Stability of temporary excavations to facilitate jet grouting is the Contractors responsibility to inspect and maintain.

J. Provide the Engineer site access for observation of the work.

K. If boulders are encountered notify the Engineer. Move column center over a maximum of 2.5 feet as directed by the Engineer.

3.3 TOLERANCES

A. Install Jet Grouted Columns to elevation shown on plans.

B. Ensure no part of a jet grouted element is within 3 feet of existing utilities.

C. Provide Jet Grouted Columns with a minimum diameter of 4 feet.

D. Ensure centerline of elements are not more than 2.5 feet from plan centerline.

E. Overlap Jet Grouted Columns a minimum of 6 inches.

F. Install Jet Grouted Columns beneath riprap.
   1. Where existing riprap is present, remove riprap to facilitate Jet Grouted Column installation. Replace riprap when installation is complete.

G. Install Jet Grouted Columns to site bedrock as determined in the field by the Engineer.

3.4 QUALITY CONTROL/QUALITY ASSURANCE

A. Perform all jet grouting in the presence of the Engineer or the Department's QC/QA Representative.
   1. Notify the Engineer or the Department's QC/QA representative prior to initiating jet grouting.
   2. Monitoring and logging of jet grouting operations for both test areas and production work is performed by the jet grouting contractor.

B. Configure equipment to record and continuously show all fluid flows and pressures, rotational speed, depth and rod retraction rates.
   1. The rod retraction rate and rod RPM are set by the driller then automatically controlled by the drill rig during the entire jet grouting process and recorded on the jet grout installation log.

C. Provide all the data monitored and recorded to the Engineer in a format previously agreed on prior to the work.
   1. Make the software used for the task available to the Engineer.
      a. Provide software capable of processing the recorded data and graphics in a satisfactory manner.
      b. Provide a description to the Engineer in advance of the proposed software to be used.

D. Measure and document grout mix proportions per the submittal.
   1. Keep records and submit to the Engineer to verify that grout mixture(s) are as accepted.

E. Throughout the jet grouting operations, perform continuous coring to full depth on 5 percent of production columns to obtain drill cores of the jet grouted soil.
   1. Notify the Engineer immediately if the soil-cement samples do not meet the acceptance criteria outlined herein.
      a. A minimum core recovery of 80 percent is provided.
      b. At least 85 percent of all jet grout samples tested have a minimum 28-day unconfined compressive strength of 150 psi.

END OF SECTION

October 13, 2016

SPECIAL PROVISION

PROJECT # S-I15-1(113)5
PIN # 12780

SECTION 02468S

DRILLED SHAFTS FOR BRIDGES

Add Section 02468:

PART 1 GENERAL

1.1 SECTION INCLUDES

A. Material, equipment, and procedures for constructing drilled shafts.

1.2 RELATED SECTIONS

A. Section 03055: Portland Cement Concrete

B. Section 03211: Reinforcing Steel and Welded Wire

1.3 REFERENCES

A. ASTM D 4380: Standard Test Method for Density of Bentonitic Slurries

B. ASTM D 4381: Standard Test Method for Sand Content by Volume of Bentonitic Slurries

C. ASTM D 6760: Standard Test Method for Integrity Testing of Concrete Deep Foundations by Ultrasonic Crosshole Testing

D. ASTM D 6910: Standard Test Method for Marsh Funnel Viscosity of Clay Construction Slurries

E. ASTM D 7949: Standard Test Methods for Thermal Integrity Profiling of Concrete Deep Foundations

F. FHWA Geotechnical Engineering Circular No. 10, Drilled Shafts: Construction Procedures and LRFD Design Methods, Report No. FHWA - NHI-10-016, May 2010 (FHWA GEC10)

1.4 DEFINITIONS

A. Cross Hole Sonic Logging (CSL): Non-destructive drilled shaft integrity testing. A transmitter emits an ultrasonic signal in one tube and the signal is sensed some time later by the receiver in another tube.

B. Thermal Integrity Profiling (TIP): Non-destructive testing using cables embedded in the concrete to evaluate concrete integrity based on the heat generated by curing concrete.

C. Thermal Access Port (TAP): Data logger for use with the thermal wire method TIP for data collection.

D. Shaft Inspection Device (SID): Provides visual bottom inspection prior to rebar and concrete installation.

E. Shaft Quantitative Inspection Device (SQUID): System of penetrometers and strain gages that attaches to the drill stem. Quantitatively measures cone pressure and strain at the shaft toe.

1.5 SUBMITTALS

A. Submit working drawings for drilled shaft reinforcing steel, couplers, connections, and reinforcing steel splicing plan for low headroom. Refer to Section 03211 for submittal requirements.

B. At least one week before work on the shafts is to begin, submit to the Engineer for review and acceptance the Drilled Shaft Contractor's Installation Plan for the construction of drilled shafts. Include the following:
   1. List of equipment to be used, including cranes, drills, augers, bits, slurry pumps, sampling equipment, tremies, concrete pumps, casings, inspection devices, etc.
   2. Details of overall construction operation sequence.
   3. Details of methods to excavate and clean the shafts.
   4. Details of the method(s) to be used to ensure drilled shaft hole stability during excavation and concrete placement.
   5. Details of the proposed slurry and methods to mix, circulate, desand, and dispose of the slurry.
      a. Include the manufacturer's recommendations on the use of slurry and the proposed methods of measuring and controlling the hardness of the mixing water.
      b. Include a slurry management plan outlining the type, frequency, and depths of testing, acceptable limits of the test results, and minimum slurry head requirements.

c. Include documentation verifying that the product will not degrade the side or base resistance of the drilled shaft, produce defective concrete, or reduce the bond between the reinforcement and the concrete.

6. Details of reinforcement placement including support and centralization methods.
7. Details of concrete placement, curing, and protection, including concrete placement times. Include means of ensuring that concrete mix is compatible with placement methods. Provide provisions to ensure proper final shaft cutoff elevation.
8. Drilled Shaft Contractor's quality assurance methods to verify that shafts are installed in accordance with the specifications.
9. Name and experience record of the drilled shaft superintendent who will be in charge of drilled shaft operations for this project.
10. Where casing is to be used, include the following:
    a. Casing details, size, length, materials, and thickness.
    b. Description of the method of advancing the casing.
    c. A description of the method of maintaining the concrete slump to keep it workable using admixtures such as retarders or superplasticizers.
11. Method to dispose of drilling spoils.

C. At least one week before work on the shafts is to begin, submit the following to the Engineer:
1. A list of at least three projects completed in the last three years in which the Drilled Shaft Contractor has installed drilled shafts of a diameter and length similar to those shown on the plans, and in similar subsurface conditions. Include names and phone numbers of owner's representatives who can verify the Drilled Shaft Contractor's participation on those projects.
2. A signed statement that the Drilled Shaft Contractor has inspected the site and all of the subsurface information made available.

D. At least one week before work on the shafts is to begin, submit to the Engineer for review and acceptance the proposed CSL testing system and TIP testing system, including equipment, schematics, material specifications, tube size, installation details, connection details, and testing procedures. Submit also for review and acceptance the name and qualifications of the CSL/TIP testing organization that will conduct the testing.

E. Submit slurry test results, SID inspection results, CSL test results and TIP test results, and SID inspection results, as required by paragraph 3.1.C.8, article 3.7, paragraph 3.8.D, and paragraph 3.9. D, respectively.

F. Logs of shaft construction. A detailed log of the shaft construction shall be maintained by the Contractor. The minimum information required is shown on an example report presented on page F-6 of FHWA-NHI-09-016, Drilled Shaft Manual dated May 2010.

G. Acceptance of submittals by the Engineer does not relieve the Contractor of the responsibility to perform the work in accordance with the Contract Documents. The intent of the submittal and review process is for the Contractor to explain the approach to the work and allow the Engineer an opportunity to comment on the equipment and procedures chosen before field operations begin. The Engineer's acceptance is not a guarantee that the chosen methods and equipment are capable of obtaining the required results. This responsibility lies with the Contractor.

1.6 QUALITY ASSURANCE

A. Shaft installed unsatisfactorily or the shaft cannot be completed within the required tolerances:
   1. Immediately remove the reinforcing steel cage and the concrete.
   2. Replace the reinforcing cage and place concrete in a satisfactory manner.
   3. Furnish materials and work necessary to correct out-of-tolerance drilled shaft construction at no cost to the Department.

1.7 ACCEPTANCE

A. Drilled shafts may be accepted at a reduced price when the concrete strength is below what is specified.
   1. Price adjustment pay factor following Section 03055.
   2. The Department applies the pay factor to the measurement of the total length of any shaft containing concrete with strength tests falling below what is specified.

1.8 ADDITIONAL PAYMENT

A. The Department will not consider extra payment of Drilled Shafts for Bridges until amount of work exceeds twenty percent (20%) of contract bid amount.
   1. Bore logs' summary of subsurface conditions at the time of excavation will differ at other locations, and should be used for information only.
   2. If Contractor requests additional payment, the Department will negotiate for payment above the 20% of item bid amount.
   3. No additional payment will be made between zero (0%) and 20% for additional work.

PART 2 PRODUCTS

2.1 PORTLAND CEMENT CONCRETE

A. Class AA (AE) concrete, except that air entrainment is not required for concrete more than 9 feet below top of drilled shaft with f'c = 4,000 psi minimum. Refer to Section 03055.
   1. Use Type V cement.

B. Modify as follows when placed under water:
   1. Use at least seven bags of cement per cubic yard.
   2. Provide equipment capable of pumping specified concrete.
   3. Use high range water reducers (super plasticizers) according to Section 03055.
   4. Keep slump between 4 and 8 inches when tested at the truck.

2.2 REINFORCING STEEL

A. Refer to Section 03211.

2.3 DRILLING EQUIPMENT

A. Capable of:
   1. Efficiently drilling holes to the required diameter, location, alignment, and to a depth of ten feet beyond the depths shown on the plans, in the type of materials present at the shaft locations.
   2. Installing and removing rebar cage.

PART 3 EXECUTION

3.1 PREPARATION

A. Drilling Holes
   1. Drill straight, vertical holes to the tip elevations shown on the plans or as determined by Engineer.
   2. Remove loose material from the bottom of the drilled holes and inspect cleanliness in accordance with article 3.7 before placing concrete.
   3. Do not use water for drilling operations.
   4. Do not begin drilling for a shaft located three diameters center-to-center or closer to an adjacent completed shaft until at least 48

hours after completion of placement of concrete for the completed shaft.

5 Do not begin drilling for a shaft located between three and five diameters center-to-center from an adjacent completed shaft until at least 24 hours after completion of placement of concrete for the completed shaft.

6. No concrete placement time restrictions for shafts five diameters center-to-center or greater apart.

7. If the excavation operation is stopped, notify the Engineer and protect the shaft cavity by installing a safety cover. Ensure the safety of the shaft excavation, surrounding soil, adjacent facilities, and stability of the sidewalls. Use temporary casing, slurry, or other methods approved by the Engineer if necessary to ensure such safety and stability. The Engineer will evaluate design impacts to the shaft due to any delays in completion.

8. Do not leave the uncased portion of a drilled shaft open for more than 24 hours after drilling.

9. Collect and properly dispose of excavated soil and rock.

B. Casing

1. Furnish and place casing to prevent the drilled hole from caving to bedrock.

C. Slurry

1. Use slurry with sufficient viscosity and gel characteristics to transport excavated material to a suitable screening system, and with sufficient percentage and specific gravity to allow proper concrete placement. Maintain the level of the slurry at a height sufficient to prevent caving of the hole.

2. Premix the slurry in accordance with the manufacturer's recommendations, and allow adequate time to develop viscosity prior to introducing slurry into the shaft excavation. Prevent slurry from "setting up" in the shaft excavation, using measures such as agitation, circulation, and adjusting the slurry properties.

3. Perform control tests on the slurry using suitable apparatus and in accordance with the manufacturer's recommendations. As a minimum, meet the requirements of Table 1:

Table 1

Slurry Properties – Range of Values at 68 degrees F		
Property	Test Method	Acceptable Range
Density	ASTM D 4380	64 to 73 lb/ft^3
Viscosity	ASTM D 6910	28 to 40 seconds
pH	Meter or Paper Strips	8 to 11
Sand Content	ASTM D 4381	4% or less

4. Conduct tests to determine density, viscosity, and pH before and during the shaft excavation to establish a consistent working pattern. Perform a minimum of four sets of tests during the first eight hours mineral slurry is in use. Once a consistent working pattern is established, continue to test the slurry density and viscosity at time intervals of no more than four hours while slurry is in use.
5. Prior to placing shaft concrete, use an approved slurry sampling tool to obtain slurry samples from the bottom and at mid-depth of the shaft. Remove any heavily-contaminated slurry that has accumulated at the bottom of the shaft. Verify that the slurry is within specification requirements immediately before shaft concrete placement.
6. If at any time the stability of the shaft cannot be maintained, install a temporary casing below the permanent casing.
7. Have available to the Contractor and Engineer a technical representative who is a full-time employee of the slurry manufacturer. Require that this representative be present at the site during the drilling of the first shaft to ensure that the slurry is mixed and managed properly.
8. Submit to the Engineer reports of all slurry tests required above.
9. Slurry should be sufficiently clear to facilitate SID testing. Otherwise holes may utilize SQUID testing with the approval of the Engineer.

3.2 CONSTRUCTION TOLERANCES

A. Install the drilled shaft within 3 inches of the plan position in the horizontal plane at the plan elevation of the top of the shaft.

B. Install the drilled shaft so the vertical alignment of the shaft excavation does not vary from the plan alignment by more than 0.25 inches per foot of depth.

C. Install the drilled shaft so the top of the reinforcing steel cage is no more than 2 inches above or below the plan elevation.

D. Excavate the bottom of the shaft using methods that will produce a flat, level bottom surface.

3.3 PLACE REBAR CAGES

A. Rigidly brace the reinforcing cage with additional reinforcing steel as needed to retain its configuration during handling and construction. Loose bars will not be permitted. Pick cage in several locations as necessary to maintain cage shape and alignment during placement.

B. Ensure that the shaft sidewalls are clean and free of excessive slurry filter cake and other deleterious substances immediately prior to placing the rebar cage in the shaft.

C. Place the reinforcing steel cage as a unit immediately after inspection of the excavation and before concrete placement. If concrete placement in the shaft does not begin immediately (within one hour) after the cage is installed, remove the cage before placing the concrete to verify the integrity of the excavated area and to ensure that loose material is removed from the bottom of the hole.

D. If the bottom of the constructed shaft elevation is lower than shown on the plans, extend the longitudinal steel the additional length by adding longitudinal bars at the bottom of the cage matching the reinforcement shown in the plans. Continue ties or spiral bars for the additional depth.

E. Provide cylindrical concrete feet (bottom supports), approved by the Engineer, to ensure that the bottom of the cage is maintained the proper distance above the base of the shaft. Do not use steel skids or chairs, or skids or chairs constructed from any other electrical conductor.

H. Support reinforcing steel such that the finished reinforcing steel top elevation is at the design elevation.

3.4 PLACE CONCRETE

A. Fill drilled holes within 24 hours after drilling.

B. Use a tremie or spout to prevent concrete from striking the steel-reinforcing cage. Do not allow the free-fall of concrete to exceed 5 ft.

C. Do not vibrate concrete during initial placement. Remove all muck, laitance, and degraded concrete from the shaft.

D. Vibrate the concrete during placement for at least the top 10 ft of the shaft.

3.5 PLACE CONCRETE UNDER WATER

A. Use concrete pumping equipment capable of pumping at least 50 yd^3/hr against a minimum 20 ft head of concrete measured from the discharge end of the pump hose extension (tremie pipe).

B. Use a rigid steel pipe pump hose extension for the tremie pipe with tight couplings straight to within ½ inch in 10 ft.
   1. Length of extension must be greater than or equal to the depth of the shaft.

2. Inside diameter must be greater than or equal to the concrete pump discharge hose but not more than ½ of the inside diameter of the reinforcing cage.

C. Purge the tremie pipe of water.
1. Insert a sturdy plastic ball or equivalent into the top of the pump hose extension before connecting the hose from the concrete pump.
2. The ball must fit snugly into the pump hose extension when the hose is filled. The hose must be strong enough to resist rupture.
3. Prime the hose and pipe with portland cement slurry.

D. Lower a small diameter pole with an attached flat plate into the hole to determine the top surface of concrete.
1. Mark both pole and pipe so that the length of penetration can be immediately determined.
2. Prevent the end of the pipe from becoming plugged with soil from the bottom of the hole.

E. Begin pumping the concrete immediately after setting the reinforcing cage and pipe in the hole. Do not begin raising the pipe until the concrete surface is 10 ft above the bottom of the pipe.

F. Keep the bottom of the tremie pipe at least 5 ft below the top of the concrete until the placement is complete and all muck, laitance, and all unsuitable concrete is removed. Provide a positive hold down if the pipe floats so the minimum 5 ft penetration is maintained.

G. Maintain head and do not pump groundwater from the casing to perform a dry pour on bridge bent shaft foundations.

3.6 FIELD QUALITY CONTROL

A. Do the following if the pipe plugs, equipment breaks down or loss of the seal at the end of the pipe occurs:
1. Pull the pipe, reset it 2 ft below the top of the concrete, and purge it.
2. Lower the pipe to at least 5 ft below the top of the placement and continue pumping concrete until all degraded concrete has lifted to the top of the shaft.
3. Remove all muck, laitance, and degraded concrete.

3.7 SHAFT INSPECTION DEVICE (SID)

A. Use a Shaft Inspection Device (SID) to inspect all shafts as follows:
1. Provide all labor, equipment, material, and other necessary items to inspect the bottom of each shaft using a SID. The SID consists of a

camera sealed inside a watertight jacket used to observe the sides and bottom of the shafts. A probe inside the SID measures the amount of sediment on the bottom of the shaft. Use a SID manufactured by GPE, Inc. of Gainesville, Florida, or approved equal.

2. Record the SID inspections on videotape, DVD, or similar. Record the date, shaft number, and camera position.
3. Procure the SID and provide training for drilled shaft supervisory personnel as well as the Engineer. Present details of the SID and the required training in the Drilled Shaft Installation Plan. Do not begin drilled shaft installation until the SID is on site and the required training has occurred.
4. If the SID becomes inoperable during construction, stop drilled shaft operations until the SID is operational again.

B. Measurements and Shaft Bottom Cleanliness Requirements

1. Inspect the bottom of the shaft using the SID to the satisfaction of the Engineer prior to placing the rebar cage in the shaft. Use the probe on the SID to determine the amount of sediment on the bottom of each shaft. After the rebar cage is placed in the shaft, sound the shaft to determine if material accumulated on the bottom of the shaft during cage placement. If there is additional sediment accumulation, remove the rebar cage and re-clean the bottom of the shaft, then re-inspect the bottom of the shaft using the SID.
2. Clean the bottoms of shafts so that a minimum of 50% of the bottom of each shaft will have less than 1/2 inch of sediment at the time of concrete placement. Ensure that the maximum depth of sediment or any other debris at any location on the bottom of the shaft does not exceed 1.0 inch. The Engineer will determine shaft cleanliness.
3. Submit preliminary results of the SID inspection as soon as practical after the inspection has occurred. Submit the final SID inspection within three days of completion of each inspection.

3.8 CROSS-HOLE SONIC LOGGING

A. General Requirements

1. Use the Cross-hole Sonic Logging (CSL) nondestructive testing (NDT) method on all drilled shafts. Meet the requirements of ASTM D 6760. Conduct CSL testing no sooner than 72 hours after concrete placement. The Engineer may specify a longer minimum time if special retarders, mix designs, or other factors result in slower-setting concrete.
2. Use an experienced independent testing organization approved by the Engineer to conduct CSL testing. Use only technicians having a least one year of CSL testing experience to conduct CSL tests.

Provide for interpretation and analysis of the recorded measurements by a professional engineer having at least three years of experience in the interpretation of CSL results. Provide access, labor, and equipment as required by the CSL testing organization.

3. Upon completion of CSL testing, remove all fluid from access tubes and any other drilled holes. After the CSL results have been evaluated, required repair of defects has been conducted, and the repair has been verified to the Engineer's satisfaction using another CSL survey, grout the CSL tubes at the direction of the Engineer with an approved 4000-psi min. grout.

B. Preparation for Testing

1. Install CSL pipes spaced equally around the inside of the reinforcing cage in each drilled shaft supporting vehicular bridges, as shown on the plans and in the following quantities:
   a. For shafts up to 48 inches in diameter, install 4 CSL tubes.
   b. For shaft diameters exceeding 48 inches, install one tube per 12 inches of shaft diameter.
2. Use Schedule 40 steel pipes or Schedule 80 PVC pipes with an inside diameter of 1 ½ inches to 2 inches that are compatible with the equipment and methods of the CSL testing firm. Do not use galvanized steel. Use only pipes with a round, regular internal diameter free of defects or obstruction, including pipe joints (use threaded pipe joints with couplings), in order to permit the free, unobstructed passage of the CSL testing firm's source and receiver probe. Use only pipes that are watertight and free from corrosion with clean internal and external faces to ensure passage of the probes, and to provide good bond with the concrete. Where PVC pipes are used, conduct CSL testing within 7 days of concrete placement.
3. Fit CSL pipes with a watertight shoe on the bottom and a removable cap on the top. Attach the pipes securely to the interior of the reinforcement cage with a minimum cover of 3 inches.
4. Install pipes as near to parallel as possible. Wire-tie to the reinforcing cage every three feet, or otherwise secure such that the pipes stay in position during placement of rebar cage and concrete.
5. Extend the pipes from ½ foot above the shaft bottoms to at least 3 feet above the shaft tops, or if the shaft top is sub-surface, at least 3-feet above the ground or water surface. Do not allow the pipes to rest on the bottom of the drilled excavation.
6. Make all pipe joints watertight. Avoid damaging the pipes during reinforcement installation. After placement of the rebar cage, fill the pipes with clean, potable water as soon as possible (no later than four hours after placement) and cap or seal the pipe tops to keep out debris. In removing caps or plugs from the pipes after

installation, avoid excessive torque, hammering, or other stresses which could break the bond between the tubes and the concrete. If shaft construction occurs during winter months and the threat of freezing temperatures is likely, the use of any ethylene glycol mixture may be substituted for potable water as a means to prohibit freezing in the CSL tubes. After the completion of testing, CSL tube fluids should be removed per 3.8 A-3 and properly disposed of.

C. CSL Logging Procedures

1. Before placing concrete, plumb at least one pipe per shaft and record the pipe length, including a notation of the pipe projection above the shaft top. Provide the shaft bottom and top elevations and construction dates to the Engineer before the CSL tests.
2. Conduct CSL tests between the pairs of pipes encompassing the perimeter and the major diagonals. In the event anomalies are detected, conduct tests along the minor diagonals in the affected area at no additional cost to the Department.
3. Conduct the CSL tests with the source and receiver probes in the same horizontal plane unless test results indicate potential defects, in which case further evaluate the questionable zone(s) with angled tests (source and receiver vertically offset in the tubes) at no additional cost to the Department.
4. Make CSL measurements at depth intervals of 0.2 feet or less, from the bottom of the tubes working upward to the top of each shaft. Pull probes simultaneously, starting from the bottoms of the tubes, over a depth-measuring device.
5. Depending upon the observed quality of shaft cleanout and concrete placement operations and the results of testing for the first shaft, the Engineer may reduce the required frequency of testing in subsequent shafts.
6. Remove any slack from the cables prior to pulling, to provide accurate depth measurements of the CSL records. Report all defects indicated by longer pulse arrival times and/or significantly lower amplitude/energy signals to the Engineer. Conduct further tests as directed by the Engineer to evaluate the extent of defects.
7. Additional NDT methods may be used to evaluate possible shaft defects, including Single-hole Sonic Logging, Gamma-Gamma Nuclear Density Logging, 3D Tomography, and/or surface Sonic Echo and Impulse Response tests. Provide consultants and/or personnel, on an as-needed basis, who are experienced and competent in the chosen NDT method. The Contractor is responsible for all costs of NDT testing.
8. Grout CSL tubes after all testing is complete, remedial work (if needed) is complete, and the shaft is accepted. Grout from the bottom using an approved 4,000 psi minimum grout.

D. CSL Testing Results

1. Present the CSL results to the Engineer in a report. Include the CSL logs with analyses of:
   a. Initial pulse arrival time versus depth
   b. Pulse energy/amplitude versus depth
2. Present a CSL log for each pipe pair tested, with any defect zones indicated on the logs and discussed in the test report as appropriate.
3. Present additional needed NDT results to the Engineer in a report format.
4. Submit copies of all data (written, electronic, etc.) obtained from the CSL and NDT inspections in an expedient manner. These submitted copies become the property of the Department.
5. All CSL and other NDT reports require the signature and seal of a Professional Engineer registered in the State of Utah.

E. Evaluation of CSL Test Results

1. The Engineer will evaluate the CSL and NDT (if needed) results within five days of receipt from the Contractor and determine whether or not the drilled shaft construction is acceptable.
2. The acceptance of each drilled shaft will be the decision of the Engineer, based on the results of the shaft integrity testing report(s) and other information on the shaft installation. Rejection of a shaft based on the shaft integrity testing requires conclusive evidence that a defect exists in the shaft, and that the defect will result in inadequate or unsafe performance.
3. If the NDT records are complex or inconclusive, the Engineer may require coring of the shaft to verify shaft conditions. The Contractor is responsible for all coring costs, including grouting of all core holes.

3.9 THERMAL INTEGRITY PROFILER (TIP) TESTING METHOD

A. General Requirements

1. Use the Thermal Integrity Profiler (TIP) testing method on all drilled shafts. Testing shall meet the requirements of ASTM D 7949.
2. Conduct TIP testing within 4 to 24 hours after concrete placement. The Engineer may specify a longer minimum time if special retarders, mix designs, or other factors result in slower-setting concrete.
3. The TIP Consultant shall have a licensed professional engineer supervising the testing and interpretation of results. The TIP Consultant shall be an independent testing agency with documented and approved experience in TIP testing.

B. Preparation for Testing

1. Install a cable for every 12 inches of shaft diameter with a minimum of 4 evenly spaced cables. Center cables between CSL tubes.
2. Thermal wire cables shall be aligned with the longitudinal reinforcement of the shaft.
    a. The cables shall be tied to the reinforcement at a location on the reinforcement that is 90 degrees to the line connecting the reinforcement to the center of the shaft using nylon zip-ties at 1.5 to 2 inches from the top and bottom of each node.
    b. If the cable is routed with a bend at any location, extra precautions on securing the cable with zip-ties on either side of each such node must be taken.
3. Each thermal Wire cables shall be connected to a Thermal Access Port (TAP, mini data logger) immediately following casting. Care shall be taken to record which cable is connected to which TAP.
    a. The TAP should be suspended on a protruding rebar well above the top of the concrete.

C. TIP Logging Procedures

1. Data shall be collected by the TAP at intervals of time specified by the Engineer, for a duration of time specified by the Engineer.
2. Report to the Engineer if the peak temperature has not been reached within 24 hours with a longer recommended time duration.

D. TIP Testing Results

1. Present the TIP results to the Engineer in a written report within (5) working days of completion of testing. The report shall present results of TIP tests by including:
    a. Graphical displays of all temperature measurements versus depth
    b. Indication of unusual temperatures, particularly significantly cooler local deviations of the average at any depth from the overall average over the entire length, in either Thermal Wire cable or probe measurements.
    c. The overall average temperature.
    d. Variations in temperature between Thermal Wire cables (at each depth) which in turn correspond to variations in cage alignment.
2. Identify any anomalous zones indicated on the logs and discuss in the test report as appropriate.
3. All TIP reports require the signature and seal of a Professional Engineer registered in the State of Utah.

E. Evaluation of TIP Test Results

1. The Engineer will evaluate the TIP results within five days of receipt from the Contractor and determine whether or not the drilled shaft construction is acceptable.
2. The acceptance of each drilled shaft will be the decision of the Engineer, based on the results of the TIP report(s) and other information on the shaft installation. Rejection of a shaft based on the shaft integrity testing requires conclusive evidence that a defect exists in the shaft, and that the defect will result in inadequate or unsafe performance.
3. If the TIP records are complex or inconclusive, the Engineer may require coring of the shaft to verify shaft conditions. The Contractor is responsible for all coring costs, including grouting of all core holes.

3.10 CORE DRILLING OF DRILLED SHAFT CONCRETE

A. Core production drilled shafts that are determined to be unacceptable by the CSL and/or TIP test to determine the quality of the concrete, when directed by the Engineer. Take core samples as required from each defective shaft for the full depth of the irregularities and for three feet above and below the irregularity, and to the extent necessary to fully identify the anomaly and determine a course of action. Submit a coring plan to the Engineer for review and acceptance prior to beginning the work.

B. Coring Equipment Requirements
1. Use a core drill that is in good condition and capable of delivering a smooth flow of power to the bit, both in rotation and down thrust. Use a positive displacement type pump that is in good condition, capable of delivering a minimum of 15 gallons of water per minute at 200 psi, equipped with a relief valve set to release at a maximum of 200 psi, and equipped with a pressure gauge ranging from 0 psi to 1,000 psi.
2. Use a drill bit size HW or larger. Use core barrel size HW or larger, M series, double-tubed, with a chromed inner barrel. For each hole, use a new diamond set bit of best quality and having a minimum of four waterways. The engineer may require a new bit or replacement of the core barrel at any time inspection indicates excessive wear or loss of diamonds.
3. Set the core drill machine so that the drill force will be exactly vertical and so that there will not be more than five feet of laterally-unsupported drill rod between the bottom of the drill spindle (chuck) and the top of the shaft concrete when the hydraulic feed is in the up position. When longer laterally-unsupported sections of the drill stem are necessary, use braced casing or rigidly-braced guides to prevent lateral whip.

C. Keep an accurate log of cores and place the cores in a suitable wooden crate properly marked showing the shaft depth at each interval of core recovery. Submit the cores along with two copies of the coring log for inspection and testing.

D. Do not continue construction above the drilled shaft until the quality of the concrete in the shaft, as represented by the core samples, is determined to be acceptable, and notification to continue construction is given by the Engineer.

E. After the quality of the concrete in the drilled shaft is determined to be acceptable, or after shaft remedial repairs are complete and accepted by the Engineer, grout the core hole in the shaft from the bottom using an approved 4000-psi min. grout.

F. If remedial repairs are performed, run CSL testing after repairs to verify that the shaft is repaired to the satisfaction of the Engineer.

END OF SECTION

Supplemental Specification
2012 Standard Specification Book

SECTION 02610

DRAINAGE PIPE

Delete Section 02610 and replace with the following:

PART 1 GENERAL

1.1 SECTION INCLUDES

A. Materials and procedures for installing drainage pipe.

B. Class, type, and size designations for drainage pipe.

C. Inspection and acceptance.

1.2 RELATED SECTIONS

A. Section 01282: Payment

B. Section 02056: Embankment, Borrow, and Backfill

C. Section 02317: Structural Excavation

1.3 REFERENCES

A. AASHTO M 36: Corrugated Steel Pipe, Metallic-Coated, for Sewers and Drains

B. AASHTO M 167: Corrugated Steel Structural Plate, Zinc-Coated, for Field-Bolted Pipe, Pipe-Arches, and Arches

C. AASHTO M 170: Reinforced Concrete Culvert, Storm Drain, and Sewer Pipe

D. AASHTO M 196: Corrugated Aluminum Pipe for Sewers and Drains

E. AASHTO M 197: Aluminum Alloy Sheet for Corrugated Aluminum Pipe

F. AASHTO M 198: Joints for Concrete Pipe, Manholes, and Precast Box Sections Using Preformed Flexible Joint Sealants

G. AASHTO M 207: Reinforced Concrete Elliptical Culvert, Storm Drain and Sewer Pipe

H. AASHTO M 219: Corrugated Aluminum Alloy Structural Plate for Field-Bolted Pipe, Pipe-Arches, and Arches

I. AASHTO M 243: Field Applied Coating of Corrugated Metal Structural Plate for Pipe, Pipe Arches, and Arches

J. AASHTO M 245: Corrugated Steel Pipe, Polymer Precoated, for Sewers and Drains

K. AASHTO M 246: Steel Sheet, Metallic-Coated and Polymer-Precoated for Corrugated Steel Pipe

L. AASHTO M 274: Steel Sheet, Aluminum-Coated (Type 2), for Corrugated Steel Pipe

M. AASHTO M 294: Corrugated Polyethylene Pipe, 300- to 1500-mm (12- to 60-in.) Diameter

N. AASHTO M 304: Poly (Vinyl Chloride) (PVC) Profile Wall Drain Pipe and Fittings Based on Controlled Inside Diameter

O. AASHTO M 330: Polypropylene Pipe

P. AASHTO MP 20: Steel Reinforced Polyethylene Pipe

Q. AASHTO PP 63: Pipe Joint Selection for Highway Culvert and Storm Drains

R. AASHTO LRFD Bridge Construction Specifications

S. ASTM A 849: Post-Applied Coatings, Pavings, and Linings for Corrugated Steel Sewer and Drainage Pipe

T. ASTM C 443: Joints for Concrete Pipe and Manholes, Using Rubber Gaskets

U. ASTM D 1056: Flexible Cellular Materials—Sponge or Expanded Rubber

V. ASTM D 1784: Rigid Poly (Vinyl Chloride) (PVC) Compounds and Chlorinated Poly (Vinyl Chloride) (CPVC) Compounds

W. ASTM D 3212: Joints for Drain and Sewer Plastic Pipes Using Flexible Elastomeric Seals

X. ASTM D 3350: Polyethylene Plastics Pipe and Fittings Materials

Y. ASTM F 477: Elastomeric Seals (Gaskets) for Joining Plastic Pipe

Z. ASTM F 949: Poly(Vinyl Chloride) (PVC) Corrugated Sewer Pipe With a Smooth Interior and Fittings

AA. ASTM F 2562: Steel Reinforced Thermoplastic Ribbed Pipe and Fittings for Non-Pressure Drainage and Sewerage

BB. ASTM F 2881: Polypropylene Pipe

CC. National Transportation Product Evaluation Program (NTPEP)

DD. Occupation Safety and Health Administration (OSHA)

EE. UDOT Minimum Sampling and Testing Requirements

FF. UDOT Quality Management Plan 505

1.4 DEFINITIONS

A. The following definitions apply to this Section and the DG Series Standard Drawings.
   1. Backfill – Material used to fill the trench or excavation, exclusive of bedding material.
   2. Bedding Material – Material on which a pipe is supported.
   3. Cover – The vertical dimension above the crown to the finished fill elevation or pavement surface.
   4. Crown – The top or highest point of a pipe.
   5. Culvert – A pipe, open on both ends, that conveys surface runoff through an embankment.
   6. Distortion – A deviation from a pipe's original shape due to earth pressure or surface loads.
   7. Down Drain – A pipe that is connected to a drainage structure that drains vertically down to a surface below.
   8. Drainage pipe – A pipe that conveys water regardless of shape and material type such as culverts, irrigation pipes, and storm drains.
   9. End Section – A structure made of steel or concrete, attached to the ends of a pipe to retain the embankment and provide anchorage.
   10. Foundation – The natural ground or prepared base.

11. Haunch – The area of backfill material placed under the pipe, between the spring line and the bottom of the pipe.
12. Headwall – A concrete wall placed at the end of a pipe to serve one or more of the following purposes:
    a. Protect embankment fill from scour or undermining
    b. Increase hydraulic efficiency
    c. Alter the direction of flow
    d. Anchor the pipe
    e. Provide needed structural support
13. Invert – The floor, bottom, or lowest part of the internal cross section of a pipe.
14. Irrigation Pipe – A pipe designed to convey seasonal irrigation water.
15. NASSCO – National Association of Sewer Service Companies.
16. NHS – National Highway System.
17. Nominal Diameter – The inside diameter of the pipe as specified in the plans.
18. NTPEP – National Transportation Product Evaluation Program
19. Pipe Corrosion Classifications:
    a. Class A – Pipe used in mostly non-reactive soils that requires no special materials, treatments, or coatings.
    b. Class B – Pipe used in moderately reactive and corrosive soils.
    c. Class C – Pipe used in soils that are highly reactive and corrosive.
    d. Class D – Untreated structural plate pipe used in mostly non-reactive and non-corrosive soils.
    e. Class E – Structural plate pipe used in highly reactive and corrosive soils.
20. Pipe Interior Roughness:
    a. Corrugated – Interior surface that is formed into a series of alternating crests and valleys with a Manning's "n" coefficient greater than 0.013.
    b. Smooth Lined – Interior surface that is essentially smooth, with a Manning's "n" coefficient less than or equal to 0.013.
21. Pipe Sample Unit – The length of pipe from inlet to outlet or from drainage structure to drainage structure.
22. Rise – The maximum vertical dimension of a pipe arch.
23. Slope drain – A pipe that is placed along the face of a cut or fill slope.
24. Span – The maximum horizontal dimension of a pipe arch.
25. Spring Line – The location of the maximum horizontal dimension of a pipe.
26. Storm Drain – A pipe that conveys surface drainage from one drainage structure to another or an outfall.

27. Working Drawings – Drawings produced by the Contractor that supplement the contract drawings to provide information not included in the contract documents but that are required to fabricate, erect, transport or temporarily support the structure or structural elements in the completion of the work.
    a. Approval of Working Drawings - Acceptance by the Department for use on the project.

1.5 SUBMITTALS

A. Manufacturer's Certificate of Compliance for the following:
    1. Material, structural, and coating according to requirements of Table 5.
    2. Pipe joints according to AASHTO PP 63. Refer to this Section, article 2.2.
    3. Concrete pipe manufacturer is prequalified according to UDOT Quality Management Plan 505, Precast/Prestressed Concrete Structures.
    4. Thermoplastic pipe manufacturer is compliant with the AASHTO NTPEP for the diameter of pipe specified in the plans.

B. Manufacturer's installation instructions for each type of pipe used and any incidental materials required for installation.

C. NASSCO pipe inspection certification.

D. Inspection reports. Refer to this Section, article 1.6.

E. Installation plan and working drawings for structural plate pipe. Refer to this Section, article 2.1 paragraph E.
    1. Working drawings must be sealed by a Professional Engineer (PE) or Professional Structural Engineer (SE) licensed in the State of Utah.

F. Repair plan when required according to this Section, article 1.6 paragraph D.

1.6 ACCEPTANCE

A. General

1. Inspect pipes after installation and placement of backfill according to Table 1 and Table 2.

Table 1

Roadway Functional Classification	Percent of Pipes to Inspect*
Interstate Freeways, NHS Highways and Arterials	100
Collectors and Local Roads	50

* Indicated in the project plans

Table 2

Pipe Testing Requirements				
Pipe Size	Visual		Deflection*	
	Manual	Remote	Manual	Mandrel**
≤ 48–inch dia.		X		X
> 48–inch dia.	X		X	

* Deflection testing is required for circular metal and thermoplastic pipe only

** A manual inspection or other method may be performed in place of a mandrel inspection with the approval of the Engineer

2. The Engineer will determine which pipe sample units to inspect when the percentage of pipes to inspect is less than 100 percent.
   a. Inspect additional pipe sample units with apparent defects or as directed by the engineer.
      1) Repair or replacement will be at the contractor's expense if pipe does not meet the acceptance criteria in this article.
      2) The Department will pay for the cost of additional inspection if pipe meets the acceptance criteria in this article.
3. Perform inspections so that pipe sample units and required repairs are accepted by the Engineer before placing pavement or finished grade. Exceptions to this requirement are at the discretion of the Engineer.

4. The Department will not make final payment for a pipe installation until the pipe has been inspected and accepted according to this article.
    a. Refer to Section 01282 regarding progress payments and payment for material on hand.
    b. Protect all pipe from damage throughout the duration of the project.
5. No inspection is required for any slope drain or down drain. No inspection is required for a pipe extension or pipe sample unit that is less than 20 ft long.
6. Clean and flush the pipe with water immediately before the inspection.
    a. Remove all material or debris from pipes.
    b. Do not discharge debris into other pipes, structures, or drainage ditches.
7. Submit an inspection report to the Engineer for each pipe sample unit as specified in this article for remote and manual inspections within five calendar days of completing inspection.
    a. The Engineer will determine acceptance within seven calendar days of receipt of complete inspection reports.
8. Notify the Engineer at least 24 hours before performing a mandrel inspection or a manual inspection of a pipe.

B. Remote Inspection
1. Perform remote inspection for pipes with a nominal diameter less than 48 inches using closed-circuit television (CCTV) video inspection and a mandrel test as outlined below.
2. Remote video inspection operator is to have a current NASSCO certification.
3. CCTV Equipment: Record video using a crawler mounted camera capable of panning and tilting to a 90 degree angle with the axis of the pipe and rotating 360 degrees.
4. CCTV Inspection: Produce a picture quality that satisfies the Engineer. Repeat unsatisfactory inspections at no additional cost to the Department. Use the video image to determine horizontal and vertical alignment deviations, joints gaps, and pipe damage.
    a. Center the camera head in the pipe both vertically and horizontally and use lighting sufficient to allow a clear picture of the entire periphery of the pipe.
    b. Do not move the crawler through the pipe at a speed greater than 30 ft/minute. Stop the crawler and video the entire circumference at each joint. Stop the crawler and zoom when necessary to video defects.

c. Video image must be continuously illuminated, clear, focused, and free from roll, static, or other image distortion qualities that may prevent the reviewer from evaluating the pipe's condition.
    1) Calibrate the video's lighting and focus to view the internal markings within the pipe.
d. Superimpose the pipe identification and location within the pipe on the video recording.
e. Document all defects with captions in the video.
    1) Note the defect at each location and provide a still image of the defective area in the inspection report.
    2) Document all cracks and joint separations.

5. Mandrel Inspection: Used for circular metal and thermoplastic pipes only.
    a. Perform the mandrel inspection for pipes in the presence of the Engineer or representative according to Table 2.
    b. Provide a mandrel that meets the following requirements to determine pipe deflection:
        1) The diameter of the mandrel, whether it is fixed or variable size, must be verified with a proving ring or other method according to manufacturer's guidelines.
        2) Contains at least nine equally spaced runners (40 degree angles).
        3) Length not less than the diameter.
    c. Provide a proving ring to verify mandrel size when requested by the Engineer.
    d. Mandrel Inspection Procedure
        1) Pull a mandrel that is 5 percent less than the pipe nominal inside diameter.
        2) The inspection is complete if the mandrel passes through at 5 percent.
        3) Accomplish the following before completing the inspection if the mandrel cannot pass through:
            a) Record the maximum distance achieved from the inlet side.
            b) Remove the mandrel and continue the inspection from the outlet end of the pipe toward the inlet end. Record the maximum distance achieved from the outlet side.
            c) Repeat with the mandrel set to 7.5 percent less than the pipe nominal inside diameter.

6. Prepare an Inspection Report and include:
    a. A video recording of each pipe inspection in a digital format.
    b. The project number, date, and time of the inspection for each pipe inspection, the pipe identification used in the plan set, and type and size of pipe.

c. Written and still image documentation of locations where alignment deviations, joint gaps, pipe damage, and any other deficiencies were observed.

d. The size of the mandrel and whether or not it was successfully pulled through the pipe.

1) Mandrel size and maximum distance pulled from each side of the pipe if the mandrel was not able to pass.

C. Manual Inspection

1. Perform manual inspection for pipes in the presence of the Engineer or representative according to Table 2.

a. Follow OSHA requirements for inspecting confined entry spaces.

2. Perform the following inspection:

a. Deflection (for circular metal and thermoplastic pipes only). Perform a mandrel inspection or take the following measurements every 10 ft along the length of the pipe to the nearest ¼ inch:

1) Vertically from the crown to invert

2) Horizontally at the spring line

3) Two measurements, each diagonally at 45 degrees to the pipe springline

b. Cracks – Measure observed cracks using a feeler gauge capable of measuring 0.01 inch. Other measuring devices may be used when approved by the Engineer.

c. Gaps – Measure and record the widest gap at each joint to the nearest ¼ inch.

3. Inspection Report

a. Include the project number, date and time of the inspection, the pipe identification used in the plan set, and type and size of pipe.

1) Document inspection results for deflection and observations of alignment deviations, joint gaps, and pipe damage. Include the type and location along the pipe for each measurement along with still images for each observation.

D. Acceptance

1. Each pipe sample unit is accepted after verifying that the allowable tolerances for the following requirements have been met:

a. Horizontal and vertical alignment deviations

b. Deflection

c. Joints gaps

d. Damage

2. Repair or replace damaged or improperly installed pipes at no cost to the Department.

3. Evaluate each pipe that does not meet the acceptance criteria described in this article and recommend appropriate action. Submit documentation that has been signed and sealed by a Professional Engineer (P.E.), competent in the structural design of pipe material being evaluated, either:
   a. No repair is required for the pipe to function and maintain its structural integrity over its design life.
   b. A repair is required to allow the pipe to function and maintain its structural integrity over its design life.
      1) Submit repair plans to the Engineer, obtain written approval from the Engineer before performing work.
      2) Inspect the repaired portion of the pipe and any feature potentially affected by the repair.
4. Alignment
   a. Evaluate each pipe that exceeds the alignment tolerances shown in Table 3 and recommend appropriate action.
   b. Evaluate each pipe that has areas where ponding occurs and recommend appropriate action.

Table 3

Installation Alignment Tolerances		
Design Grade	**Horizontal**	**Vertical***
		inch/100 ft
> 1%	Horizontal joint deflections not to exceed industry standards	1½
0.5% - 1%		1
< 0.5%		½

* Increase tolerance by 50 percent for culverts.

5. Distortion – Based on the percentage change from the nominal diameter.
   a. Evaluate each pipe with a distortion between 5 percent and 7.5 percent and recommend appropriate action.
   b. Remove and replace each pipe with a distortion greater than 7.5 percent.

6. Joint Gaps
   a. Evaluate each pipe joint with a gap exceeding the tolerance specified in Table 4 and recommend appropriate action according to manufacturer's recommendations.

Table 4

Joint Gap Tolerances	
Nominal Diameter (inches)	**Joint Gap (inches)**
12 to 36	0.75
42 to 48	1.00
54 to 90	1.25
96 to 144	1.75

   b. Repair joints showing visible signs of soil or water infiltration according to the approved plans submitted.
7. Damage – Fractures, cracks, or other defects passing through the walls or joints sufficient to impair strength, durability, function or product serviceability. Evaluate damage and recommend appropriate action according to this Section, Article 1.6 paragraph D.3.
   a. Metal pipe – Repair damaged, delaminated, or scaled coating on metal pipe according to the approved plans submitted.
   b. Plastic pipe – Evaluate pipes that show the following signs:
      1) Damaged pipe cross section such as dents, cuts, cracks, breaks, fractures, or deformations.
   c. Reinforced concrete pipe
      1) Evaluate pipes that show the following:
         a) Cracks between 0.01 inch and 0.10 inch
         b) Damaged pipe cross section such as breaks or fractures
         c) Broken bells or spigots
      2) Remove and replace pipe that show the following:
         a) Exposed reinforcing steel
         b) Imperfect proportioning mixing and casting such as honeycomb or open texture
      3) Repair or replace reinforced concrete pipe if cracks are greater than 0.10 inch.

PART 2 PRODUCTS

2.1 PIPE

A. General – pipes are identified according to interior roughness, joint type, diameter or span and rise, and corrosion class.

1. Provide the type of pipe specified in the plans with the following exceptions:
   a. Provide any pipe type that meets the interior roughness requirements of Table 5 and the specified pipe joint rating and corrosion classification when no material type is specified in the plans.
   b. Substitutions to a higher pipe corrosion classification are allowed.
2. Do not change the material type, strength, or thickness of the pipe along an installation unless approved in writing by the Engineer.
3. Use the cover over the pipe to determine the strength or thickness. Refer to the DG Series Standard Drawings.
4. Internally label each section of pipe with the manufacturer's name or trademark, nominal diameter, and manufacture date. Include the pipe class, gauge, and coating according to the pipe material type.
   a. Place the pipe so that the location of the label is above the spring line of the pipe.

Table 5

AASHTO/ASTM Specifications for Pipe					
Interior Roughness and Material Type	**Corrosion Class**				
	A	**B**	**C**	**D**	**E**
Corrugated					
Corrugated steel pipe and pipe arch	M 36	M 36 Polymeric Coating (outside only) M 245 & M 246 ASTM A 849 or Aluminized Type II Steel M 274	M 36 Polymeric Coating (both sides) M 245 & M 246 ASTM A 849	N/A	N/A
Corrugated aluminum pipe and pipe arch	M 196 M 197	M 196 M 197	M 196 M 197	N/A	N/A
Corrugated polyethylene (HDPE) pipe	M 294 ASTM D 3350	M 294 ASTM D 3350	M 294 ASTM D 3350	N/A	N/A
Smooth Lined					
Smooth lined corrugated polyethylene (HDPE) pipe	M 294 ASTM D 3350	M 294 ASTM D 3350	M 294 ASTM D 3350	N/A	N/A
Smooth lined polyvinyl chloride (PVC) pipe	M 304 & ASTM F 949 Cell Class # 12454C ASTM D 1784	M 304 & ASTM F 949 Cell Class # 12454C ASTM D 1784	M 304 & ASTM F 949 Cell Class # 12454C ASTM D 1784	N/A	N/A
Smooth lined polypropylene pipe	M 330 ASTM F 2881	M 330 ASTM F 2881	M 330 ASTM F 2881	N/A	N/A
Steel reinforced thermoplastic ribbed pipe	MP 20 ASTM F 2562	MP 20 ASTM F 2562	MP 20 ASTM F 2562	N/A	N/A
Spiral rib steel pipe and pipe arch	M 36	M 36 Polymeric Coating (outside only) M 245 & M 246, ASTM A 849 or Aluminized Type II Steel M 274	M 36 Polymeric Coating (both sides) M 245 & M 246 ASTM A 849	N/A	N/A
Spiral rib aluminum pipe and pipe arch	M 196 M 197	M 196 M 197	M 196 M 197	N/A	N/A
Reinforced concrete pipe	M 170 Type II Cement	M 170 Type II Cement	M 170 Type V Cement	N/A	N/A
Elliptical reinforced concrete pipe	M 207 Type II Cement	M 207 Type II Cement	M 207 Type V Cement	N/A	N/A

AASHTO/ASTM Specifications for Structural Plate Pipe					
Interior Roughness and Material Type	**Corrosion Class**				
	A	**B**	**C**	**D**	**E**
Corrugated					
Structural steel plate pipe and pipe arch	N/A	N/A	N/A	M 167	M 167 M 243
Aluminum alloy structural plate pipe and pipe arch	N/A	N/A	N/A	M 219	M 219

B. Reinforced Concrete Pipe
   1. Concrete pipe manufacturer is pre-qualified according to UDOT QMP 505.
   2. Do not cast lift holes except for circular pipe that has a nominal diameter greater than 54 inches or any elliptical pipe.
      a. Fill lift holes with a plug supplied by the manufacturer or with non-shrink grout according to the pipe manufacturer's recommendations.

C. Metal Pipe
   1. Do not allow pipes of different types of metal to contact each other.
   2. Use matching materials to make direct extensions of existing pipes.
   3. Do not use aluminum pipe when a paved invert is required unless protective measures are taken.
   4. Class B Aluminized Type II Steel is acceptable only when the minimum metal thickness is 16 gauge and where pH is greater than 5.5 and less than 8.5 and soil resistivity is greater than 1,500 ohm-centimeters.

D. Thermoplastic Pipe
   1. HDPE pipe – Do not use greater than 60 inch diameter.
      a. HDPE pipe manufacturer is compliant with NTPEP.
   2. PVC pipe – Do not use greater than 36 inch diameter.
   3. Do not use in permanent above ground installations unless approved in writing by the Engineer.

E. Structural Plate Pipe
   1. Spray or brush-coat all areas of aluminum pipe contacting concrete with an asphalt mastic or tar based material at least 0.05 inch thick. Refer to AASHTO M 243.
   2. Assembly
      a. Provide the Engineer an installation plan and working drawings showing the position of each plate and the assembly order.

b. Do not begin work until working drawings have been approved.
   1) The Department will review working drawings for general conformance with the design concept and compliance with the contract documents.
   2) Approval does not relieve the Contractor from responsibility for errors, correctness of details, conformance to the contract, and the successful completion of the work.
c. Follow the manufacturer's instructions.

F. Steel Reinforced Thermoplastic Ribbed Pipe
1. Do not use greater than 60 inch diameter.
2. Do not use in permanent above ground installations unless approved in writing by the Engineer.

G. Polypropylene Pipe
1. Do not use greater than 60 inch diameter.
2. Do not use in permanent above ground installations, unless approved in writing by the Engineer.

2.2 JOINTS OR COUPLING BANDS

A. General
1. Supply pipe joints that have been evaluated according to AASHTO PP 63.
   a. Culverts – Meet the silt-tight joint requirements of at least 2 psi for all culverts except where project plans or specifications require a higher pressure rating.
   b. Storm Drains and Irrigation Pipes – Meet the leak resistant joint requirements of at least 10.8 psi for all storm drains and irrigation pipes except where project plans or specifications require a higher pressure rating.
2. Comply with manufacturer's recommendations for connecting pipes and for connecting pipe to end sections, concrete headwalls, catch basins, and similar structures.
3. Elliptical, arched, and structural plate pipes are not pressure rated.

B. Reinforced Concrete Pipe
1. Use a rubber gasket joint that meets the requirements of ASTM C 443 for circular reinforced concrete pipe.
2. Use a mastic joint sealant that meets the requirements of AASHTO M 198 for elliptical reinforced concrete pipe.

C. Metal Pipe

1. Use an external corrugated connecting band with a neoprene sleeve/flat gasket. Refer to ASTM D 1056.
   a. Continuous one piece construction closed-cell neoprene, skin on all sides.
   b. Minimum thickness of ⅜ inch and no less than the width of the connection band used.
2. Re-roll ends of helically corrugated pipe to form at least two full annular corrugations each before being joined.
3. Refer to AASHTO LRFD Bridge Construction Specifications and AASHTO M 36 or M 245 with the following modifications for external corrugated connecting bands:
   a. Use bands of the same or better corrosion class as the pipe. Maintain a minimum thickness of 16 gauge but not less than a 2 gauge step lighter than the pipe gauge.
   b. Use bands with projections (dimple bands) only in extension of existing pipes or a field cut where annular corrugations do not exist.

D. Thermoplastic Pipe

1. Use bell and spigot joints with an elastomeric rubber seal that meets the requirements of ASTM F 477.

E Steel Reinforced Thermoplastic Ribbed Pipe

1. Use pipe joints that meet the requirements of ASTM D 3212.

2.3 PIPE BEDDING AND BACKFILL

A. Refer to Section 02056.

PART 3 EXECUTION

3.1 PREPARATION

A. Excavation

1. Refer to Section 02317.
2. Keep trenches free from water.

B. Foundation

1. Grade and prepare the bottom of the trench to provide a firm and uniform bearing throughout the entire length of the pipe. Do not use blocking to bring the pipe to grade.
2. Shape the foundation to have recesses to fit any projecting hubs or bells.

3.2 INSTALLATION

A. Refer to DG Series Standard Drawings, Standard Specifications, AASHTO LRFD Bridge Construction Specifications, and manufacturer's installation requirements for installing all types of pipe. Adhere to the more stringent requirement if there is a conflict between any of the above installation requirements.

B. Pipe Bedding
   1. Refer to Section 02056 and DG Series Standard Drawings for bedding requirements.
   2. Place the bottom of the pipe in contact with the bedding throughout its full length.
   3. Shape the bedding to have recesses to fit any projecting hubs or bells.

C. Pipe Placement
   1. Check pipe for alignment and grade when joining the sections.
   2. Remove and relay or replace pipe that is out of alignment, settled, or damaged.
   3. Verify joints are assembled properly.

D. Pipe Backfill
   1. Refer to Section 02056 for backfill requirements.
   2. Test frequency according to UDOT Minimum Sampling and Testing Requirements and Section 02056.

E. Provide adequate cover and protect pipe during project construction.

END OF SECTION

September 14, 2016

SPECIAL PROVISION

PROJECT # S-I15-1(113)5
PIN # 12780

SECTION 02612S

TRENCHLESS PIPE INSTALLATION

Add Section 02612:

PART 1 GENERAL

1.1 SECTION INCLUDES

A. Materials and procedures for installing a buried pipe by means of trenchless installation.

1.2 RELATED SECTIONS

A. Section 01355: Environmental Protection

B. Section 01554: Traffic Control

C. Section 02056: Embankment, Borrow, and Backfill

D. Section 02316: Roadway Excavation

E. Section 02610: Drainage Pipe

F. Section 03575: Flowable Fill

1.3 REFERENCES

A. American Water Works Association (AWWA) Standards

B. Utah Administrative Code

1.4 DEFINITIONS

A. Roadway Prism – The roadway cross section that contains the embankment, pavement, shoulders and other features, together with the subsoils that underlie the same to the maximum depth of the subject utility.

1.5 SUBMITTALS

A. Two copies of each submittal for review. Include all applicable drawings, calculations, geotechnical reports, and a written work plan in each copy.
   1. Identify in the work plan details of the trenchless construction, sequence of operations to be performed during construction, a detailed schedule of construction, and a traffic control plan.
   2. Detail sufficiently the drawings, calculations, and descriptions in order to demonstrate to the Engineer whether the proposed materials and procedures will meet the requirements of this Section.
   3. Sign and seal the structural designs and other engineered components by a Utah registered Professional Engineer.

B. Include the following information, divided into the sections listed below:
   1. Geotechnical Report:
      a. Map showing field exploration locations
      b. Summary of field exploration and laboratory testing procedures and results
      c. Description of site surface and subsurface conditions encountered during field investigations
      d. Soil boring Logs
   2. Structural Data:
      a. Direct jacking concrete pipe wall thickness and material type
      b. Manufacturer's recommended maximum and minimum fill height limits for the identified pipe
   3. Traffic Control Plan – Comply with Section 01554:
      a. Location and dimensions of any temporary access roads
      b. Location and dimensions of bore pit area "footprint"
      d. Proposed traffic control
      e. Amount of time the footprint will be exposed

4. Installation Plan:
    a. Manufacturer's current recommended installation for each type of pipe used and any incidental materials required for installation
    b. Location and dimensions of bore pit
    c. Method of shoring, including details for all required ground support
    d. Method of controlling line and grade
    e. Method of spoil removal, including surface storage and disposal
    f. Grouting techniques to be used for filling annular voids caused by over excavation if any, including equipment, pumping and injection procedures, pressure grout types, and mixtures
    g. Method of dewatering and disposal
    h. Details of casing spacers and casing end seals
    i. Emergency safety and repair plan for accidental damage caused to existing utilities, roadway surface, or other features resulting from construction operations

C. Do not begin work until the submittals have been reviewed and accepted by the Engineer.
    1. The Engineer will have 10 working days for review and acceptance.
    2. Provide new submittals upon receiving notification that the submittals are insufficient.
        a. Allow an additional 7 working days for the Engineer's review and acceptance.

D. Alternative mix design: Refer to this Section, article 3.2.G for requirements.

1.6 QUALITY ASSURANCE

A. Third party utilities must meet the requirements of Utah Administrative Code Rule 930-7.

B. Adhere to manufacturer standards for products and installation methods.

1.7 ACCEPTANCE

A. Provide the Engineer horizontal and vertical alignment data, in latitude and longitude coordinates and elevation in feet, pertaining to the termini of installation, including but not limited to the beginning and end points and all intermediate boxes.

B. Perform inspection and acceptance according to Section 02610 for carriers with a diameter greater than 12 inches.

PART 2 MATERIALS

2.1 DIRECT JACKING CONCRETE PIPE

A. Provide direct jacking concrete pipe capable of withstanding the forces of installation.

PART 3 EXECUTION

3.1 PREPARATION

A. Verify the position of nearby utilities before installation. Establish a path for the pipe installation that will meet minimum clearances required by adjacent utilities while following the plans.

B. The design of a bore pit and required bearing to resist jacking forces is the responsibility of the Contractor.

C. Excavation:
   1. Refer to Sections 02316 and 01355.
   2. Keep bore pit free of water.
      a. Dewater according to the installation plan.
      b. Disposal of water must not cause damage or become a nuisance.

D. Place bore pits outside the AASHTO clear zone.
   1. Refer to TC Series Standard Drawings for mitigation if the bore pits cannot be located outside the AASHTO clear zone.

3.2 INSTALLATION – GENERAL

A. Install the pipe specified in the contract documents to the alignment and profile shown on the plans.

B. Continuously monitor the location and alignment of the pilot bore progress to insure compliance with the proposed installation alignment and to verify depth of the bore.
   1. Provide the Engineer as-built drawings and an accurate log of the pipe boring upon completion of the bore.

C. Monitor worksite for indications of displacement of the roadway prism and escaping boring fluids.
   1. Suspend work immediately whenever fluids seep to the surface other than in the boring entrance or exit pit or when the paved surface is displaced.

a. Propose a method for acceptance by the Engineer to prevent further seepage or displacement before resuming the boring operation.

2. Provide GPS survey of the existing surface within the vicinity of the installation and at other locations as requested by the Engineer before and at the conclusion of the installation.
   a. Changes to the existing surface will be evaluated and repaired at no additional cost to the Department.
   b. Remediation plans must be approved by the Engineer before any work proceeds when required.

D. Repair any buckling of the casing due to jacking forces at no additional cost to the Department.

E. Contain excess boring fluids at the entry and exit points until recycled or removed from the site.
   1. Verify that all boring fluids are disposed of in a manner acceptable to the appropriate local, state, and federal regulations.

F. Leave no exterior voids along the bore hole.
   1. Fill the voids with an approved pressurized grout material at no additional cost to the Department if voids develop greater than the outside diameter of the conduit by 1 inch.

G. Fill the void immediately with flowable fill if an obstruction is hit during construction and the bore path is to be abandoned. Refer to Section 03575 for an approved mix design or submit an alternative mix design to be approved by the Region Materials Engineer.
   1. Submit a new installation plan to the Engineer for approval before resuming work at another location.

H. Do not allow the use of water under pressure (jetting) or puddling to facilitate boring or jacking operations.

3.3 RESTORE EXCAVATED AREA

A. Restore excavated or disturbed area to pre-installation conditions.

B. Backfill and compact excavation material to match the shape of the surrounding surface. Refer to Section 02056.

END OF SECTION

August 9, 2016

SPECIAL PROVISION

PROJECT # S-I15-1(113)5
PIN # 12780

SECTION 02621S

CORE AND GROUT CONNECTION

Add Section 02621:

PART I GENERAL

1.1 SECTION INCLUDES

A. Core cut and grout new pipe into an existing concrete drainage structure wall.

1.2 RELATED SECTIONS

A. Section 03211: Reinforcing Steel and Welded Wire

B. Section 02633: Concrete Drainage Structures

C. Section 03055: Portland Cement Concrete

1.3 REFERENCES

A. ASTM C 1107: Standard Specification for Packaged Dry, Hydraulic-Cement Grout (Nonshrink)

1.4 DEFINITIONS Not Used

1.5 SUBMITTALS

A. Submit concrete mix design for approval in accordance with Section 03055.

PART 2 PRODUCTS

2.1 MATERIALS

A. Non-Shrink Grout: Use non-shrink grout conforming to ASTM C 1107.

PART 3 EXECUTION

3.1 CONSTRUCTION

A. Core drill the existing concrete structure wall so that the flow line of the new pipe matches the pipe flow line shown on the plans. Core the hole 2 inches to 4 inches larger than the outside diameter of the connecting pipe.

B. Recoat exposed rebar per Section 03211.

C. Center the connecting pipe within the core hole and adequately brace to carry the full weight of the pipe prior to grouting the void area.

D. Grout the void between the pipe and the hole cored in the existing concrete wall. Fill joints, voids, and pockets, completely. Form a watertight joint, uniformly finished inside and out.

E. Repair any damage caused by coring.

END OF SECTION

September 15, 2016

SPECIAL PROVISION

PROJECT # S-I15-1(113)5
PIN # 12780

SECTION 02631S

STORMWATER TREATMENT HOOD

Add Section 02631:

PART 1 GENERAL

1.1 SECTION INCLUDES

A. Stormwater Treatment Hood attached to the wall of a storm drain catch basin or manhole, over the outlet pipe, to prevent the exit of floating debris and oil.

1.2 RELATED SECTIONS Not Used

1.3 REFERENCES

A. ASTM D-790: Standard Test Methods for Flexural Properties of Unreinforced and Reinforced Plastics and Electrical Insulating Materials

B. ASTM D-638: Standard Test Method for Tensile Properties of Plastics

C. ASTM D-2583: Standard Test method for Indentation Hardness of Rigid Plastics by Means of a Barcol Impressor

D. ASTM D-3350: Polyethylene Plastics Pipe and Fittings Materials

1.4 DEFINITIONS Not Used

1.5 SUBMITTALS

A. Submit manufacturer's product information for Engineer approval, including product sizing information showing proper stormwater treatment hood size selection for the outlet pipe and catch basin/manhole size.

PART 2 PRODUCTS

2.1 SUPPLIER

A. Best Management Products, Inc.
53 Mt. Archer Rd.
Lyme, CT 06371
Phone: (800) 504-8008
www.bmpinc.com

B. ADS
4640 Trueman Boulevard
Hilliard, OH 43026
Phone: (800) 821-6710
www.ads-pipe.com

C. Ground Water Rescue, Inc.
24 Ryden Street
Quincy, MA 02169
(617) 773-1128
www.kleanstream.com

D. Substitutions of equal product allowed with approval of Engineer.

2.2 MATERIAL

A. Provide all items recommended by the manufacturer for a complete installed product.

PART 3 EXECUTION

3.1 INSTALLATION

A. Use stainless steel fasteners to connect Stormwater Treatment Hood to structure.

B. Stormwater Treatment Hood must have siphon prevention vent.

C. Install Stormwater Treatment Hood in accordance with the manufacturer's recommendations and as approved by the Engineer.

3.2 CLEANING

A. At completion of work, remove debris caused by installation from project site.

END OF SECTION

August 9, 2016

SPECIAL PROVISION

PROJECT # S-I15-1(113)5
PIN # 12780

SECTION 02633M

CONCRETE DRAINAGE STRUCTURES

Add the following to Part 3.2 INSTALLATION, Section C. Precast Inlets and Boxes, Subsection 1.

b. Cast-in-place, flush with pavement, after pavement section is placed, all grate and frame tops for catch basins and boxes that will be located in pavement.

Supplemental Specification
2012 Standard Specification Book

SECTION 02633M

CONCRETE DRAINAGE STRUCTURES

Delete Article 2.7 and replace with the following:

2.7 Not used

Add the following to Article 3.2, paragraph A1:

a. Cure wet cast members according to Section 03390.

Add the following to Article 3.2, paragraph B1:

a. Cure wet cast members according to Section 03390.

Add the following to Article 3.2, paragraph C2:

b. Cure wet cast members according to Section 03390.

Delete Article 3.2, paragraph C4 and replace with the following:

4. Do not ship precast units until after 28-day compressive strength has been attained.
   a. Protect the unit from any damage. Replace unacceptable units at no additional cost to the Department.

Add the following to Article 3.2:

D. Cast-in-place concrete drainage structures.
   1. Refer to CB and DB Series Standard Drawings.
   2. Construct according to Section 03310.
   3. Cure according to Section 03390.

Supplemental Specification
2012 Standard Specification Book

SECTION 02645M

PRECAST CONCRETE BOX AND THREE-SIDED CULVERT STRUCTURES

Delete Article 1.3, paragraph N and replace with the following:

N. UDOT Structures Quality Control/Quality Assurance (QC/QA) Procedures

Delete Article 1.3, paragraph P and replace with the following:

P. UDOT Bridge Management Manual

Delete Article 1.5, paragraph A.3.c and replace with the following:

c. Certify that engineering calculations have been checked according to the UDOT Structures QC/QA Procedures.

Delete Article 2.9, paragraph H and replace with the following:

H. Load rate all precast concrete box culverts and precast concrete three-sided structures with spans greater than 20 ft according to the AASHTO Manual for Bridge Evaluation and the UDOT Bridge Management Manual.
   1. Measure span length along roadway centerline.

December 16, 2014

SPECIAL PROVISION

PROJECT # S-I15-1(113)5
PIN # 12780

SECTION 02735M

MICRO-SURFACING

Delete Article 1.3, paragraph Q through S and replace with the following:

Q. AASHTO PP 72-11: Recovering Residue from Emulsified Asphalt Using Low-Temperature Evaporative Techniques

R. ASTM D 6372: Testing and Construction of Micro-Surfacing

S. ASTM D 7405: Multiple Stress Creep and Recovery (MSCR) of Asphalt Binder Using a Dynamic Shear Rheometer

Delete Table 3 and replace with the following:

Table 3

Modified Emulsion Residue By Distillation		
Test Method	**Description**	**Specification**
AASHTO T 49	Penetration, 25° C	40-90
AASHTO T 53	Softening point	57° C Min
AASHTO T 59-modified (a)	Residue by distillation	62% Min.
AASHTO T 316	Rotational Viscosity 135° C	650 CPS Min
Modified Emulsion Residue By Evaporation, AASHTO PP 72-11 Procedure B		
AASHTO T 315 (b)	Original DSR, G* at 58º C, kPa	7 - 14
AASHTO T 315 (b)	Original DSR, Phase Angle, δ, at 58º C	75 Max.
ASTM D 7405 (b)	Multiple Stress Creep Recovery (MSCR) at 64º C, % recovery at 3.2 kPa stress level	25 Min.

(a) Modified distillation procedure – Heat emulsion residue to 177 ± 5° C and maintain that temperature for 20 min. Perform the distillation within 60 ± 15 min.

(b) Do not reheat on completion of evaporation. Complete residue testing within 48 hr of performing the evaporation procedure. Pull small specimens from the evaporation sample for rheological testing and ball by hand using gloves that will not affect the residue such as nitrile gloves.

August 9, 2016

SPECIAL PROVISION

PROJECT # S-I15-1(113)5
PIN # 12780

SECTION 02737S

SOFT SPOT REPAIR

Add Section 02737:

PART 1 GENERAL

1.1 SECTION INCLUDES

A. Remove and replace soft spots in the existing pavement, base course or borrow sections in locations as directed by the Engineer.

1.2 RELATED SECTIONS

A. Section 02056: Embankment, Borrow, and Backfill

B. Section 02072S: Geogrid – Subgrade Stabilization

C. Section 02721: Untreated Base Course

D. Section 02741: Hot Mix Asphalt

E. Section 02742S: Project Specific Surfacing Requirements

F. Section 02744S: Stone Matrix Asphalt

G. Section 02748: Prime Coat/Tack Coat

1.3 REFERENCES Not Used

1.4 DEFINITIONS

A. Asphalt Soft Spot Repair – Remove existing asphalt and replace asphalt only

B. Untreated Base Course Soft Spot Repair – Remove existing base course, and replace base course

C. Borrow Soft Spot Repair – Remove existing subgrade and add geogrid and subgrade

1.5 SUBMITALS

A. Submittals as required in Section 02741, Section 02744S, Section 02721 and Section 02072S

PART 2 PRODUCTS

2.1 GEOGRID

A. Refer to Section 02072S.

2.2 UNTREATED BASE COURSE

A. Refer to Section 02721.

2.3 HOT MIX ASPHALT / STONE MATRIX ASPHALT

A. Refer to Section 02741 or Section 02744S for mix design and material requirements.

B. Refer to Section 02742S.

C. Refer to Section 02748.

2.4 BORROW

A. Refer to Section 02056 for Borrow specifications.

PART 3 EXECUTION

3.1 ASPHALT SOFT SPOT REPAIR; REPLACE ASPHALT SURFACING

A. Remove the deteriorated asphalt to a depth of 6 inches below final roadway surface for non-interstate routes and 8 inches for interstate routes or as directed by the Engineer.
   1. Remove by either pavement cutting or rotomilling, leaving all edges square and vertical.

a. Locate cut at least 6 inches beyond the visible limits of the distressed area and to a minimum patch width of 3 ft in all directions.
b. If a rotomill is used, the mill must be at least 6 ft wide and a minimum patch size of 6 ft in all directions.

2. Removal limits must be a minimum of 2 ft from wheel path in both directions.

B. Remove the damaged asphalt surfacing without damaging the surrounding asphalt pavement.
1. Remove all loose material and clean vertical edges prior to applying tack coat and paving.

C. Transport and dispose of excavated material in approved location.

D. If all existing asphalt was removed, grade and compact the existing base course surface.
1. Use the largest piece of vibratory or impact compaction equipment possible.
2. Compact per Section 02056.
3. Continue compaction until additional work does not improve the measured density.

E. Place and compact asphalt.
1. Tack all bituminous surfaces conforming to Section 02748.
2. Place and compact asphalt mix, conforming to Section 02741 or Section 02744S, and Section 02742S, to within 1/8” of the existing surface.

3.2 UNTREATED BASE COURSE SOFT SPOT REPAIR; REMOVE AND REPLACE BASE

A. Excavate and remove 10 inches of existing base course or as directed by the Engineer.
1. Replace with untreated base course that conforms to Section 02721.
2. Fill to an elevation of 6 inches below final surface for non-interstate routes and 8 inches for interstate routes.

B. Transport and dispose of excavated material in approved location.

C. Grade and compact untreated base course.
1. Use the largest piece of vibratory or impact compaction equipment possible.
2. Compact per Section 02721.

3.3 BORROW SOFT SPOT REPAIR; REMOVE AND REPLACE SUBGRADE

A. Excavate and remove a minimum of 24 inches of saturated or unsatisfactory material or to a depth approved by the Engineer.
   1. Place suitable borrow material conforming to Section 02056. Selected material must be sufficient to bridge or stabilize the subgrade.
      a. Fill to an elevation of 16 inches below final surface for non-interstate routes and 18 inches for interstate routes.
      b. If generated during construction activities, Engineer may specify rotomill tailings as a suitable material to be used to stabilize subgrade.
      c. In some cases a material consisting of large aggregate (1' minus) may be required to stabilize a heavily saturated subgrade.

B. Transport and dispose of excavated material in approved location.

C. Grade and compact Borrow.
   1. Use the largest piece of vibratory or impact compaction equipment possible.
   2. Compact per Section 02056.
   3. If rotomill tailings are used, continue compaction until additional work does not improve the measured density.

3.4 GEOGRID, TYPE 2 INSTALLATION

A. Install Geogrid Type 2, conforming to Special Provision 02072S according to Soft Spot Repair Detail.

B. Payment for Geogrid is included in the Borrow Soft Spot Repair pay item.

END OF SECTION

September 8, 2014

SPECIAL PROVISION

PROJECT # S-I15-1(113)5
PIN # 12780

SECTION 02741M

Hot Mix Asphalt (HMA)

Delete Article 1.6, paragraph D8 and replace with the following:

8. The Department will reject the lot according to Table 1.

Delete Article 1.6, paragraph E1 and replace with the following:

1. According to Table 1.

Add the following to Article 1.6:

G. No incentive will be applied to the second of any two consecutive lots that does not meet the Air Void requirements of Article 3.3.A.2.

Delete Table 1 and replace with the following:

Table 1

Incentive/Disincentive for Asphalt Binder Content, and Density	
PT Based on Min. Four Samples	**Incentive/Disincentive (Dollars/Ton)**
>99	1.50
96-99	1.00
92-95	0.60
88-91	0.00
84-87	-0.26
80-83	-0.60
76-79	-0.93
72-75	-1.27
68-71	-1.60
64-67	-1.93
60-63	-2.27
<60	Reject
Incentive/Disincentive for Gradation	
PT Based on Min. Four Samples	**Incentive/Disincentive (Dollars/Ton)**
>99	1.50
96-99	1.00
92-95	0.60
88-91	0.00
84-87	-0.26
80-83	-0.60
76-79	-0.93
72-75	-1.27
68-71	-1.60
64-67	-1.93
60-63	-2.27
56-59	-5.00
52-55	-10.00
<52	Reject

Delete Table 3 and replace with the following

Table 3

Quality Index Values for Estimating Percent Within Limits										
PU/PL	**n=3**	**n=4**	**n=5**	**n=6**	**n=7**	**n=8**	**n=10**	**n=12**	**n=15**	**n=20**
100	1.16	1.50	1.75	1.91	2.06	2.15	2.29	2.35	2.47	2.56
99	1.16	1.47	1.68	1.79	1.89	1.95	2.04	2.09	2.14	2.19
98	1.15	1.44	1.61	1.70	1.77	1.80	1.86	1.89	1.93	1.97
97	1.15	1.41	1.55	1.62	1.67	1.69	1.74	1.77	1.80	1.82
96	1.15	1.38	1.49	1.55	1.59	1.61	1.64	1.66	1.69	1.70
95	1.14	1.35	1.45	1.49	1.52	1.54	1.56	1.57	1.59	1.61
94	1.13	1.32	1.40	1.44	1.46	1.47	1.49	1.50	1.51	1.53
93	1.12	1.29	1.36	1.38	1.40	1.41	1.43	1.43	1.44	1.46
92	1.11	1.26	1.31	1.33	1.35	1.36	1.37	1.37	1.38	1.39
91	1.10	1.23	1.27	1.29	1.30	1.31	1.32	1.32	1.32	1.33
90	1.09	1.20	1.23	1.24	1.25	1.25	1.26	1.26	1.27	1.27
89	1.08	1.17	1.20	1.21	1.21	1.21	1.21	1.21	1.22	1.22
88	1.07	1.14	1.16	1.17	1.17	1.17	1.17	1.17	1.17	1.17
87	1.06	1.11	1.12.	1.12	1.12	1.13	1.13	1.13	1.13	1.13
86	1.05	1.08	1.08	1.08	1.08	1.08	1.08	1.08	1.08	1.08
85	1.03	1.05	1.05	1.05	1.05	1.04	1.04	1.04	1.04	1.04
84	1.02	1.02	1.02	1.01	1.01	1.01	1.00	1.00	1.00	1.00
83	1.00	0.99	0.98	0.97	0.97	0.96	0.96	0.96	0.96	0.96
82	0.98	0.96	0.95	0.94	0.94	0.93	0.93	0.92	0.92	0.92
81	0.96	0.93	0.92	0.91	0.90	0.90	0.89	0.89	0.89	0.88
80	0.94	0.90	0.88	0.87	0.86	0.86	0.85	0.85	0.85	0.85
79	0.92	0.87	0.85	0.84	0.83	0.83	0.82	0.82	0.82	0.81
78	0.89	0.84	0.82	0.81	0.80	0.79	0.79	0.78	0.78	0.78
77	0.87	0.81	0.79	.0.78	0.77	0.76	0.76	0.75	0.75	0.75
76	0.84	0.78	0.76	0.75	0.74	0.73	0.72	0.72	0.72	0.72
75	0.82	0.75	0.73	0.72	0.71	0.70	0.69	0.69	0.69	0.68
74	0.79	0.72	0.70	0.68	0.67	0.67	0.66	0.66	0.66	0.65
73	0.77	0.69	0.67	0.65	0.64	0.64	0.62	0.62	0.62	0.62
72	0.74	0.66	0.64	0.62	0.61	0.61	0.60	0.59	0.59	0.59
71	0.71	0.63	0.60	0.59	0.58	0.58	0.57	0.56	0.56	0.56
70	0.68	0.60	0.58	0.56	0.55	0.55	0.54	0.54	0.54	0.53
69	0.65	0.57	0.55	0.54	0.53	0.52	0.51	0.51	0.51	0.50
68	0.62	0.54	0.52	0.51	0.50	0.50	0.48	0.48	0.48	0.48
67	0.59	0.51	0.49	0.48	0.47	0.47	0.46	0.45	0.45	0.45
66	0.56	0.48	0.46	0.45	0.44	0.44	0.43	0.42	0.42	0.42
65	0.53	0.45	0.43	0.42	0.41	0.41	0.40	0.40	0.40	0.39
64	0.49	0.42	0.40	0.39	0.38	0.38	0.37	0.37	0.37	0.37
63	0.46	0.39	0.37	0.36	0.35	0.35	0.35	0.34	0.34	0.34
62	0.43	0.36	0.34	0.33	0.33	0.33	0.32	0.31	0.31	0.31
61	0.39	0.33	0.31	0.30	0.30	0.30	0.29	0.29	0.29	0.28
60	0.36	0.30	0.28	0.27	0.26	0.26	0.25	0.25	0.25	0.25
59	0.32	0.27	0.25	0.25	0.24	0.24	0.24	0.23	0.23	0.23

Table 3 Continued										
PU/PL	**n=3**	**n=4**	**n=5**	**n=6**	**n=7**	**n=8**	**n=10**	**n=12**	**n=15**	**n=20**
58	0.29	0.24	0.23	0.22	0.21	0.21	0.21	0.21	0.21	0.20
57	0.25	0.21	0.20	0.19	0.19	0.19	0.18	0.18	0.18	0.18
56	0.22	0.18	0.17	0.16	0.16	0.16	0.16	0.16	0.15	0.15
55	0.18	0.15	0.14	0.14	0.13	0.13	0.13	0.13	0.13	0.13
54	0.14	0.12	0.11	0.11	0.11	0.11	0.10	0.10	0.10	0.10
53	0.11	0.09	0.08	0.08	0.08	0.08	0.08	0.08	0.08	0.08
52	0.07	0.06	0.06	0.05	0.05	0.05	0.05	0.05	0.05	0.05
51	0.04	0.03	0.03	0.03	0.03	0.03	0.03	0.03	0.03	0.03
50	0.00	0.00	0.00	0.00	0.00	0.00	0.00	0.00	0.00	0.00

Enter table in the appropriate “number of tests” column and round down to the nearest value.

Delete Article 2.4, and replace with the following:

2.4 RECLAIMED ASPHALT PAVEMENT (RAP) (Optional)

A. Do not adjust the asphalt binder grade if the lower end is already a PG XX-34.

B. Do not adjust the asphalt binder grade when RAP content is not more than 15 percent by total weight of the hot mix and RAP asphalt binder content is not more than 15 percent of the total asphalt binder content by weight.

C. Adjust asphalt binder grade according to AASHTO M 323 when RAP asphalt binder content is between 15 to 25 percent of the asphalt binder weight.

1. Select one grade softer than the grade specified. Do not adjust the asphalt binder grade if the lower end is already a PG XX-34.
2. Provide test reports indicating that the PG grade and quantity of the recovered asphalt binder is consistent throughout the stockpile.
3. Limit RAP to 25 percent of the total weight of the hot mix and RAP binder to 25 percent of the total binder.

D. RAP aggregate is required to meet Table 5 with exception of Sand Equivalent. Refer to AASHTO T 176.

Add Article 2.6, paragraph A3 and A4:

3. Delete the first bullet of paragraph 960.04 in UDOT Materials Manual of Instruction 960.
4. Delete “SSD” from GsbSSD – fine and coarse aggregate specific gravities – AASHTO T 84 and T 85 of paragraph 960.05.02 in UDOT Materials Manual of Instruction 960.

Delete Table 8 and replace with the following:

Table 8

Volumetric Design Requirements	
HMA design mixing and compaction temperatures	Provided by the Engineer
Dust Proportion Range	0.6 – 1.40
Voids in Mineral Aggregate (VMA) at N_{Design} AASHTO R 35.9.2 using G_{sb} Dry. Equation based on percent of total mix.	12.0% - 13.0% for 1 inch 13.0% - 14.0% for ¾ inch 14.0% - 15.0% for ½ inch 15.0% - 16.0% for ⅜ inch
Hamburg Wheel Tracker UDOT Materials MOI 990	75 Design Gyrations and Greater Maximum 10 mm impression at 20,000 passes. Less than 75 Design Gyrations Maximum 10 mm impression at 10,000 passes.

June 30, 2015

SPECIAL PROVISION

PROJECT # S-I15-1(113)5
PIN # 12780

SECTION 02742S

PROJECT SPECIFIC SURFACING REQUIREMENTS

Add Section 02742:

PART 1 GENERAL

1.1 SECTION INCLUDES

A. Required PG Asphalt or emulsion

B Required minimum asphalt content for SMA mixes

C. Number of gyrations to use for Superpave Mix Design

D. PCCP Pavement Texture Type

1.2 RELATED SECTIONS **Not Used**

1.3 REFERENCES **Not Used**

1.4 DEFINITIONS **Not Used**

1.5 SUBMITTALS **Not Used**

PART 2 PRODUCTS

2.1 MIXES

A. Hot Mix Asphalt (HMA): (Refer to bid item for size)
   1. PG ____70-28____ Asphalt
   2. $N_{initial}$ _____8_____ N_{design} _____100_____ N_{final} _____160_____

B. Stone Matrix Asphalt (SMA): (Refer to bid item for size)
   1. Minimum Asphalt Content____6.5____as a percentage of the total mix.
   2. PG ____70-28____ Asphalt
   3. N_{design} ____100____

C. Fog Seal

1. Fog Seal __CSS-1 with application rate of 0.1 Gal/SY__

D. Micro-Surfacing

1. See Special Provision 02735S.

PART 3 EXECUTION Not used

END OF SECTION

June 30, 2015

SPECIAL PROVISION

PROJECT # S-I15-1(113)5
PIN # 12780

SECTION 02744S

STONE MATRIX ASPHALT (SMA)

Add Section 02744:

PART 1 GENERAL

1.1 SECTION INCLUDES

A. Products and procedures for laying and compacting a surface course of one or more layers of fiber stabilized SMA comprised of aggregate, asphalt binder, lime, and other additives.

1.2 RELATED SECTIONS

A. Section 01452: Profilograph and Pavement Smoothness

B. Section 01456: Materials Dispute Resolution

C. Section 02741: Hot Mix Asphalt

D. Section 02742S: Project Specific Surfacing Requirements

E. Section 02745: Asphalt Material

F. Section 02746: Hydrated Lime

G. Section 02748: Prime Coat/Tack Coat

1.3 REFERENCES

A. AASHTO M 231: Weighing Devices used in the Testing of Materials

B. AASHTO M 325 – 08: Stone Matrix Asphalt (SMA)

C. AASHTO R 46: Designing Stone Matrix Asphalt

D. AASHTO R 28: Accelerated Aging of Asphalt Binder Using a Pressurized Aging Vessel (PAV)

E. AASHTO T 11: Materials Finer Than 75 µm (No. 200) Sieve in Mineral Aggregates by Washing

F. AASHTO T 19: Unit Weights and Voids in Aggregate

G. AASHTO T 27: Sieve Analysis of Fine and Coarse Aggregates

H. AASHTO T 30: Mechanical Analysis of Extracted Aggregate

I. AASTHO T 85: Specific Gravity and Absorption of Coarse Aggregate

J. AASHTO T 89: Determining the Liquid Limit of Soils

K. AASHTO T 90: Determining the Plastic Limit and Plasticity Index of Soils

L. AASHTO T 96: Resistance to Abrasion of Small Size Coarse Aggregate by Use of the Los Angeles Machine

M. AASHTO T 104: Soundness of Aggregate by Use of Sodium Sulfate or Magnesium Sulfate

N. AASHTO T 112: Clay Lumps and Friable Particles in Aggregate

O. AASHTO T 166: Bulk Specific Gravity of Compacted Bituminous Mixtures Using Saturated-Surface Dry Specimens

P. AASHTO T 176: Plastic Fines in Graded Aggregates and Soils by Use of the Sand Equivalent Test

Q. AASHTO T 195: Determining Degree of Particle Coating of Bituminous-Aggregate Mixtures

R. AASHTO T 209: Maximum Specific Gravity of Bituminous Paving Mixtures

S. AASHTO T 240: Effect of Heat and Air on a Moving Film of Asphalt (RTFO)

T. AASHTO T 255: Total Moisture Content of Aggregate by Drying

U. AASHTO T 304: Uncompacted Void Content of Fine Aggregate

V. AASHTO T 305: Determination of Draindown Characteristics in Uncompacted Asphalt Mixtures

W. AASHTO T 308: Determining the Asphalt Binder Content of Hot-Mix Asphalt (HMA) by the Ignition Method

X. AASHTO T 312: Method for Preparing and Determining the Density of Hot-Mix Asphalt (SMA) Specimens by Means of the Superpave Gyratory Compactor

Y. AASHTO T 313: Determining the Flexural Creep Stiffness of an Asphalt Binder Using the Bending Beam Rheometer (BBR)

Z. AASHTO T 315: Determining the Rheological Properties of an Asphalt Binder Using the Dynamic Shear Rheometer (DSR)

AA. AASHTO T 335: Determining the Percentage of Fractured Particles in Coarse Aggregate

BB. ASTM C 612: Standard Specification for Mineral Fiber Block and Board Thermal Insulation

CC. ASTM D 3549: Thickness or Height of Compacted Bituminous Paving Mixture Specimens

DD. ASTM D 4402: Viscosity Determinations of Unfilled Asphalts Using the Brookfield Thermosel Apparatus

EE. ASTM D 4753: Evaluating, Selecting, and Specifying Balances and Scales for use in Soil and Rock Testing

FF. NAPA Quality Improvement Series Publication 122: Designing and Constructing SMA Mixtures – State-of-the-Practice

GG. UDOT Materials Manual of Instruction, Part 8, Sections 960, 984, and 985.

HH. UDOT Minimum Sampling and Testing Guide

1.4 DEFINITIONS Not Used

1.5 SUBMITTALS

A. Mix design at least 10 working days before paving according to the UDOT Materials Manual of Instruction 960.

B. Verification that hydrated lime meets the requirements of Section 02746.

C. Verification that asphalt binder meets the requirements of Section 02745.

D. Changes in job mix design
   1. Submit a written request for any proposed change in the job-mix gradation.
      a. Allow at least 12 hours for approval before incorporating a minor target change into production.
      b. Allow at least six working days for verification and approval of any other change.
   2. Include documentation supporting correlation between suggested target changes and mix design volumetric requirements. Department acceptance test results or Contractor QC test data or both are acceptable.
   3. Submit samples according to the UDOT Materials Manual of Instruction 960 for a volumetric mix design verification for anything other than approved minor target changes, as defined in Section 02741. This includes changes in the aggregate source, asphalt binder source, or asphalt binder grade.

E. Corrective action plan according to Section 02741 and this Section, Article 1.6 paragraph G2.

F. Refer to this Section, Article 1.7 paragraphs B and C for laboratory correlation submittals.

G. Refer to this Section, Article 2.4 paragraph B for volumetric mix design.

H. Refer to this Section, Article 2.4 paragraph H for sample submittals.

I. Refer to this Section, Article 2.6 for contractor initiated changes in stone matrix asphalt mix design.

1.6 ACCEPTANCE

A. A lot equals the number of tons of SMA placed during each production day. The Department will:
   1. Divide each lot into four sublots based on the scheduled production day.

2. Take random samples from the plant (UDOT Materials Manual of Instruction Part 8-984: Sampling Methods), and determine random numbers/locations from a random numbers table or generator. (UDOT Materials Manual of Instruction Part 8-981: Random Sampling)
    a. Dispute Resolution Sampling – Increase sample sizes to accommodate paired-T testing. Split additional material with contractor designated lab and continue until testing discrepancies between labs are identified and resolved as defined in this Section, Article 1.7 (UDOT Materials Manual of Instruction, Part 8: Chapter 4, Appendix C).
3. Inform the Contractor of the time and place for the sample not more than 15 minutes before sampling.
4. Conduct the following tests:
    a. Asphalt Binder Content: One per sublot using ignition oven. AASHTO T 308
    b. Aggregate gradation: One test per sublot on the residue of the ignition oven tests. AASHTO T 30
    c. VMA: 3 tests per lot. AASHTO T 312
    d. Maximum Specific Gravity: Three per lot in conjunction with VMA determination. AASHTO T 209
    e. VCA_{DRC}: One test per lot on un-limed cold-feed samples taken at the same time as mix samples for the first week of production or as directed by the Engineer. AASHTO R 46
    f. VCA_{MIX}: Taken from daily Gmb average of lot acceptance pucks used in conjunction with VCA_{DRC}
5. Use the average of the Maximum Specific Gravity tests for each lot to determine density of cores.
6. Determine thickness of cores according to ASTM D 3549.
7. Add the lot to the previous day′s production if the minimum number of samples cannot be obtained for the final day′s production and evaluate with the appropriate sample size.
8. Add the lot to the next day′s production if the minimum number of samples cannot be obtained and evaluate with the appropriate sample size.

B. The Engineer conducts the acceptance testing for asphalt binder content (AASHTO T 308), gradation (AASHTO T 30), VMA (AASHTO T 312), density (AASHTO T 166), and thickness (ASTM D 3549). The Engineer may elect to accept material based on visual inspection for small projects with plan quantities of SMA less than 500 tons or for work such as utility work or traffic signals.

1. The Engineer reserves the option of conducting any acceptance tests necessary to determine the material and workmanship meets the project requirements when acceptance is intended to be based on visual inspection.
2. Acceptance is limited to material being furnished from sources found satisfactory under normal sampling and testing procedures.
3. Material that is visually accepted will be documented daily using the "Visual Inspection Report."

C. Obtain samples for density and thickness.

1. The Engineer marks coring locations for in-place density and joint density cores. Obtain two cores per sublot, randomly as instructed and in the presence of the Engineer within two days after the pavement is placed. (UDOT Materials Manual of Instruction Part 8-981: Random Sampling, UDOT Materials Manual of Instruction Part 8-984: Sampling Methods).
2. Move transversely to a point one foot from the edge of the pavement if the random location for cores falls within one foot of the edge of the overall pavement section (outer part of shoulders).
3. Fill core holes with SMA and compact.
4. The Department witnesses the coring operation and takes possession of the cores immediately and begins testing the cores within 24 hours for density acceptance.

D. Density: The in-place target density for determining acceptance and incentive/disincentive is 94.0 percent of Maximum Specific Gravity density, AASHTO T 209. In-place density is based on cores obtained in paragraph C and tested according to AASHTO T 166.

1. Use Table 4 with n=10 to determine PT for density.
2. Asphalt binder content and VMA from lots are combined in order to obtain an appropriate sample size for evaluation. A lot for density determination is defined as the combined production days.

E. Thickness: Base acceptance on the average thickness of a lot. A thickness lot equals a density lot.

1. The same core samples taken for density will be used for thickness verification. ASTM D 3549
2. The Department accepts a lot when:
   a. The average thickness of all sublots is not more than ½ inch greater nor ¼ inch less than the total thickness specified.

b. No individual sublot shows a deficient thickness of more than ⅜ inch.
c. Place additional materials where lots or sublots are deficient in thickness. The minimum depth of compacted surface for correcting deficient thickness is 3 times the nominal maximum aggregate size.
d. The Department pays for the quantity of additional material to bring the surface to design grade.
e. The Department does not pay for the quantity of additional material above the design grade due to the minimum paving thickness required.
f. The Engineer may allow excess thickness to remain in place or may order its removal. Remove and replace the entire depth of the course if it is necessary to remove portions of the course.
g. The Department pays for 50 percent of the mix in excess of the +½ inch tolerance when excess thickness is allowed to remain in place.

F. Smoothness Tests
1. Determine acceptance and correct according to Section 01452.

G. Cease production when any two out of three consecutive lots meet one of the following:
1. Criteria
a. A net disincentive
b. Air voids at N_{des} averaged for each lot are less than 2.5 or greater than 4.5 percent
c. VMA is less than 17.0 percent
d. Refer to Table 2 of this section.
2. Submit a corrective action plan to the Engineer before production continues indicating the changes in production procedures that will be implemented to correct the deficiencies.

H. The Department pays incentive/disincentive on the assessed quantities of SMA mix according to Table 1. Base the incentive/disincentive on Percent Within Limit (PT) computation using Tables 3, 4, and 5. Use lowest single value combined for gradation (each of the sieves) and asphalt binder content for calculating the gradation/asphalt binder content incentive/disincentive in Table 1.
1. Meet PT of 88 or greater for density for eligibility for incentive in gradation/asphalt binder content.
2. Meet control requirements of Table 2 for VMA/VCA.
a. The Department does not pay incentive for gradation/asphalt binder content if the contractor does not meet the conditions of “continue paving” action from table 2.

3. Incentives/disincentives do not apply to material accepted on the basis of visual inspection.

I. The Department rejects the lot if the PT for any individual measurement is less than 60 percent. The disincentive for the lot is $35.00/Ton deduction if the rejected lot is allowed to remain in place.

J. The Engineer may, in concurrence with the Contractor, choose to combine production from several days to form a single lot to reduce over-testing of small quantity production days such as ramps or bridgework.

K. Design a mix with the minimum binder content as found in Section 02742S, as a percentage of the total mix.

L. No incentive will be applied to the second of any two consecutive lots that does not meet the Air Voids requirements of Article 1.6.G.1.b.

Table 1

Incentive/Disincentive for Asphalt Binder Content, and Density	
PT Based on Min. Four Samples	**Incentive/Disincentive (Dollars/Ton)**
>99	1.50
96-99	1.00
92-95	0.60
88-91	0.00
84-87	-0.26
80-83	-0.60
76-79	-0.93
72-75	-1.27
68-71	-1.60
64-67	-1.93
60-63	-2.27
<60	Reject
Incentive/Disincentive for Gradation	
PT Based on Min. Four Samples	**Incentive/Disincentive (Dollars/Ton)**
>99	1.50
96-99	1.00
92-95	0.60
88-91	0.00
84-87	-0.26
80-83	-0.60
76-79	-0.93
72-75	-1.27
68-71	-1.60
64-67	-1.93
60-63	-2.27
56-59	-5.00
52-55	-10.00
<52	Reject

Table 2

Production Control for VMA/VCA_{MIX}		
VMA Average Value, x, (%) Minimum of three Samples	**VCA_{MIX} Job – Mix Design**	**Action**
X ≥ 16.5 and X ≤18.5	$VCA_{MIX} < VCA_{DRC}$	Continue Paving
X < 16.5 or X >18.5	$0 < VCA_{MIX} - VCA_{DRC} \leq 0.5\%$	Shut Down Production until a corrective action plan is approved.
X < 15.5 or X >19.5	$0.5 < VCA_{MIX} - VCA_{DRC}$	Shut Down Production and resubmit Mix Design

Table 3

Upper and Lower Limit Determination	
Parameter	**UL and LL**
$^3/_8$" sieve for ½" SMA	Target Value ± 5.0%
#4 sieve	Target Value ± 4.0%
# 8 sieve	Target Value ± 3.0%
# 50 sieve	Target Value ± 3.0%
# 200 sieve	Target Value ± 2.0%
Asphalt Binder Content	Target Value ± 0.3%
Density	Lower Limit: Target Value - 2.0% Upper Limit: Target Value + 3.0%

Table 4

Quality Index Values for Estimating Percent Within Limits										
PU/PL	**n=3**	**n=4**	**n=5**	**n=6**	**n=7**	**n=8**	**n=10**	**n=12**	**n=15**	**n=20**
100	1.16	1.50	1.75	1.91	2.06	2.15	2.29	2.35	2.47	2.56
99	1.16	1.47	1.68	1.79	1.89	1.95	2.04	2.09	2.14	2.19
98	1.15	1.44	1.61	1.70	1.77	1.80	1.86	1.89	1.93	1.97
97	1.15	1.41	1.55	1.62	1.67	1.69	1.74	1.77	1.80	1.82
96	1.15	1.38	1.49	1.55	1.59	1.61	1.64	1.66	1.69	1.70
95	1.14	1.35	1.45	1.49	1.52	1.54	1.56	1.57	1.59	1.61
94	1.13	1.32	1.40	1.44	1.46	1.47	1.49	1.50	1.51	1.53
93	1.12	1.29	1.36	1.38	1.40	1.41	1.43	1.43	1.44	1.46
92	1.11	1.26	1.31	1.33	1.35	1.36	1.37	1.37	1.38	1.39
91	1.10	1.23	1.27	1.29	1.30	1.31	1.32	1.32	1.32	1.33
90	1.09	1.20	1.23	1.24	1.25	1.25	1.26	1.26	1.27	1.27
89	1.08	1.17	1.20	1.21	1.21	1.21	1.21	1.21	1.22	1.22
88	1.07	1.14	1.16	1.17	1.17	1.17	1.17	1.17	1.17	1.17
87	1.06	1.11	1.12.	1.12	1.12	1.13	1.13	1.13	1.13	1.13
86	1.05	1.08	1.08	1.08	1.08	1.08	1.08	1.08	1.08	1.08
85	1.03	1.05	1.05	1.05	1.05	1.04	1.04	1.04	1.04	1.04
84	1.02	1.02	1.02	1.01	1.01	1.01	1.00	1.00	1.00	1.00
83	1.00	0.99	0.98	0.97	0.97	0.96	0.96	0.96	0.96	0.96
82	0.98	0.96	0.95	0.94	0.94	0.93	0.93	0.92	0.92	0.92
81	0.96	0.93	0.92	0.91	0.90	0.90	0.89	0.89	0.89	0.88
80	0.94	0.90	0.88	0.87	0.86	0.86	0.85	0.85	0.85	0.85
79	0.92	0.87	0.85	0.84	0.83	0.83	0.82	0.82	0.82	0.81
78	0.89	0.84	0.82	0.81	0.80	0.79	0.79	0.78	0.78	0.78
77	0.87	0.81	0.79	.0.78	0.77	0.76	0.76	0.75	0.75	0.75
76	0.84	0.78	0.76	0.75	0.74	0.73	0.72	0.72	0.72	0.72
75	0.82	0.75	0.73	0.72	0.71	0.70	0.69	0.69	0.69	0.68
74	0.79	0.72	0.70	0.68	0.67	0.67	0.66	0.66	0.66	0.65
73	0.77	0.69	0.67	0.65	0.64	0.64	0.62	0.62	0.62	0.62
72	0.74	0.66	0.64	0.62	0.61	0.61	0.60	0.59	0.59	0.59
71	0.71	0.63	0.60	0.59	0.58	0.58	0.57	0.56	0.56	0.56
70	0.68	0.60	0.58	0.56	0.55	0.55	0.54	0.54	0.54	0.53
69	0.65	0.57	0.55	0.54	0.53	0.52	0.51	0.51	0.51	0.50
68	0.62	0.54	0.52	0.51	0.50	0.50	0.48	0.48	0.48	0.48
67	0.59	0.51	0.49	0.48	0.47	0.47	0.46	0.45	0.45	0.45
66	0.56	0.48	0.46	0.45	0.44	0.44	0.43	0.42	0.42	0.42
65	0.53	0.45	0.43	0.42	0.41	0.41	0.40	0.40	0.40	0.39
64	0.49	0.42	0.40	0.39	0.38	0.38	0.37	0.37	0.37	0.37
63	0.46	0.39	0.37	0.36	0.35	0.35	0.35	0.34	0.34	0.34
62	0.43	0.36	0.34	0.33	0.33	0.33	0.32	0.31	0.31	0.31
61	0.39	0.33	0.31	0.30	0.30	0.30	0.29	0.29	0.29	0.28
60	0.36	0.30	0.28	0.27	0.26	0.26	0.25	0.25	0.25	0.25
59	0.32	0.27	0.25	0.25	0.24	0.24	0.24	0.23	0.23	0.23

Table 4 Continued										
PU/PL	**n=3**	**n=4**	**n=5**	**n=6**	**n=7**	**n=8**	**n=10**	**n=12**	**n=15**	**n=20**
58	0.29	0.24	0.23	0.22	0.21	0.21	0.21	0.21	0.21	0.20
57	0.25	0.21	0.20	0.19	0.19	0.19	0.18	0.18	0.18	0.18
56	0.22	0.18	0.17	0.16	0.16	0.16	0.16	0.16	0.15	0.15
55	0.18	0.15	0.14	0.14	0.13	0.13	0.13	0.13	0.13	0.13
54	0.14	0.12	0.11	0.11	0.11	0.11	0.10	0.10	0.10	0.10
53	0.11	0.09	0.08	0.08	0.08	0.08	0.08	0.08	0.08	0.08
52	0.07	0.06	0.06	0.05	0.05	0.05	0.05	0.05	0.05	0.05
51	0.04	0.03	0.03	0.03	0.03	0.03	0.03	0.03	0.03	0.03
50	0.00	0.00	0.00	0.00	0.00	0.00	0.00	0.00	0.00	0.00

Enter table in the appropriate sample size column and round down to the nearest value.

Table 5

Definitions, Abbreviations, and Formulas for Acceptance	
Term	**Explanation**
Target Value (TV)	The target values for gradation and asphalt binder content are given in the CONTRACTOR's mix design. The target value for density is 94.0 percent of maximum (Rice) density.
Average (AVE)	The sum of the lot's test results for a measured characteristic divided by the number of test results, the arithmetic mean.
Standard Deviation (s)	The square root of the value formed by summing the squared difference between the individual test results of a measured characteristic and AVE, divided by the number of test results minus one. This statement does not limit the methods of calculations of s; other methods that obtain the same value may be used.
Upper Limit (UL)	The value above the TV of each measured characteristic that defines the upper limit of acceptable production. (Table 3)
Lower Limit (LL)	The value below the TV of each measured characteristic that defines the lower limit of acceptable production (Table 3)
Upper Quality Index (QU)	QU = (UL - AVE)/s
Lower Quality Index (QL)	QL = (AVE - LL)/s
Percentage of Lot Within UL PU)	Determined by entering Table 4 with QU.
Percentage of Lot Within LL (PL)	Determined by entering Table 4 with QL.
Total Percentage of Lot (PL) Within UL and LL (PT)	PT = (PU + PL) - 100
Incentive/Disincentive	Determined by entering Table 1 with PT or PL.

All values for AVE, s, QU, and QL will be calculated to a minimum two decimal place accuracy that will be carried through all further calculations. Rounding to lower accuracy is not allowed.

1.7 LABORATORY CORRELATION

A. Perform the following to be eligible for dispute resolution:
   1. Perform split-sample, paired-T testing with the Department based on project quality control testing using UDOT LQP qualified lab.
      a. Perform split-sample, paired-T analysis on all mix acceptance tests related to volumetric properties and the following background testing:
         1) Maximum Specific Gravity of Mix, AASHTO T 209
         2) Bulk Specific Gravity of Mix, AASHTO T 166

3) Bulk Specific Gravity of Coarse Aggregates, AASHTO T 85

b. Continue until attaining successful Paired-T test results, meeting α = 0.05, for a minimum of two consecutive production days (UDOT Materials Manual of Instruction, Part 8: Chapter 4, Appendix C).

c. The engineer may require that all QC testing data be received before disclosure of the QA testing results. This applies to paired-T and all subsequent QA/QC testing data.

B. Submit a detailed report showing tabular summaries of daily test data, paired–T calculations and any corrections made to account for failed comparisons.

C. Submit summary before submitting engineering analysis for dispute resolution.

1.8 DISPUTE RESOLUTION

A. Refer to Section 01456, Materials Dispute Resolution

PART 2 PRODUCTS

2.1 ASPHALT BINDER

A. Refer to Section 02742S, Project Specific Surfacing Requirements.

B. Asphalt Material according to Section 02745.

C. Adhere to UDOT Minimum Sampling and Testing Guide Quality Management Plan 509: Asphalt Binder Quality Management System sampling, testing and handling of Asphalt Binder.

2.2 AGGREGATE

A. Refer to the UDOT Minimum Sampling and Testing Guide for testing frequencies.

B. Use crusher processed virgin aggregate material consisting of crushed stone, gravel, or slag.

C. Use the following requirements, including Table 6, to determine the suitability of the aggregate.

1. Coarse aggregates:

a. Retained on No. 4 sieve. AASHTO T 27

2. Fine aggregates:
   a. Clean, hard grained, and angular.
   b. Passing the No. 4 sieve. AASHTO T 27

Table 6

Aggregate Properties - SMA			
Test Method	**Test No.**	**Category 1**	**Category 2**
One Fractured Face	AASHTO T 335	100% min.	85% min. (1 inch and ¾ inch), and 90% min. (½ inch and $^{3}/_{8}$ inch)
Two Fractured Face	AASHTO T 335	90% min.	80% min. (1 inch and ¾ inch), and 90% min. (½ inch and $^{3}/_{8}$ inch)
Fine Aggregate Angularity	AASHTO T 304	45 min.	45 min.
Flakiness Index	UDOT MOI (Based on 3/8 inch and above)	25% max.	25% max.
L.A. Wear	AASHTO T 96	28% max.	30% max.
Sand Equivalent	AASHTO T 176 (Pre-wet method)	60 min.	45 min.
Plasticity Index (Does not Apply to Mineral Filler)	AASHTO T 89 and T 90	0 max.	0 max.
Unit Weight	AASHTO T 19	75 lb/cu. ft. min.	75 lb/cu. ft. min.
Soundness (sodium sulfate)	AASHTO T 104	10% max. loss with five cycles	10% max. loss with five cycles
Clay Lumps and Friable Particles	AASHTO T 112	2% max	2% max.
Natural Fines	N/A	0 max.	0 max.
Category 1: National Highway System and Truck Routes – Refer to section 02741. Category 2: All Other Routes			

D. Meet gradation requirements in Table 7. (AASHTO T 11, AASHTO T 27)

Table 7

Stone Matrix Asphalt Percent Passing by Mass (See SMA Mix design for sample calculations)			
Sieve Size		**½"**	**3/8"**
Control Sieves	**1.5"**		
	1"		
	¾"	100	
	½"	90 - 100	100
	3/8"	45 - 78	90 - 100
	#4	20 - 28	26 - 50
	#8	16 - 24	20 - 28
	#16	13 - 21	13 - 21
	#30	12 - 18	12 - 18
	#50	12 - 15	12 - 15
	#200	8 - 10	8 - 10

2.3 ADDITIVES / STABILIZERS

A. Hydrated Lime: Meet the requirements of Section 02746.

B. Fibers: Made from virgin basalt, diabase, slag, or cellulose treated with a cationic sizing agent to enhance disbursement of the fiber as well as increase adhesion of the fiber surface with the Asphalt binder. This additive will also be used to control drain-down. All fibers will conform to AASHTO M 325 - 08.

1. Mineral Fiber
   a. Dosage rate between 0.3 percent to 0.6 percent, by weight of the total mix.
   b. Average fiber length 0.25 inches, maximum
   c. Average Fiber thickness 0.0002 inches, maximum
   d. Shot content (ASTM C 612)
      Passing No. 60 sieve 90 - 100 percent
      Passing No. 230 sieve 65 - 100 percent

2. Cellulose Fiber
   a. Dosage rate for cellulose is 0.2 percent to 0.4 percent by weight of total mix.
   b. Using Alpine sieve analysis, fiber length of 0.25 inches max. passing the #100 sieve 70 percent (+/- 10 percent).
   c. Using a mesh screen analysis, fibers will pass
      #20 sieve 85 percent (+/- 10 percent)
      #40 sieve 65 percent (+/-10 percent)
      #140 sieve 30 percent (+/-10 percent)
   d. Ash content will be 18 percent (+/- 5 percent)
   e. PH will be 7.5 (+/- 1.0)
   f. Oil absorption will be 5.0 (+/- 1.0 percent)
   g. Moisture content will be <5 percent by weight of cellulose

C. Mineral Filler:
Consists of finely divided mineral matter such as rock dust, slag dust, hydrated lime, hydraulic cement, fly ash, or other suitable mineral matter. Free flowing and free of lumps.
1. Meet the following

No. 30	100 percent, Passing
No. 50	95 - 100 percent, Passing
No. 200	55 - 100 percent, Passing
No. 450	40 percent, Maximum

2. No organic impurities
3. Plasticity Index < 4 (not appropriate for hydrated lime and hydraulic cement)

2.4 JOB-MIX DESIGN

A. Perform Stone Matrix Asphalt Mix Design according to AASHTO R 46, with the following:
1. Use a UDOT Transportation Technician Qualification Program qualified laboratory for HMA.
2. Use a Superpave Gyratory Compactor approved in accordance with UDOT Materials Manual of Instruction Part 8-961: Guidelines for Superpave Gyratory Compactor Protocol.
3. Meet all mix design requirements in Table 8 and Table 9 for the selected target gradation.
4. Refer to NAPA Quality Improvement Series Publication 122: Designing and Constructing SMA Mixtures – State-of-the-practice for additional information.

B. Submit the Volumetric Mix Design data for verification at least 10 working days before beginning paving. Do not begin paving until verification is complete.

1. Include all information regarding selection of design aggregate structure showing the target values of percent passing on all sieves listed in Table 7, and the design asphalt binder content.
2. Provide information that aggregate proposed for use meet the requirements of Table 6.
3. Supply QC data for target job mix gradation selection. Use those target values for price adjustments.
4. Run 4 sets of 2 Gyratory specimens at the design asphalt binder content to verify the optimum asphalt and all other design requirements after the design is complete.

C. Moisture Susceptibility

1. Incorporate hydrated lime into all volumetric designs. Use 1 percent, minimum, for Method A and 1½ percent, minimum for Method B (Section 02746).
   a. Prepare laboratory samples in a manner similar to field production. Construct lab samples similarly by adding hydrated lime to aggregate and drying sample before the incorporation of mineral filler and fiber if hydrated lime is to be introduced to the mix before adding mineral filler and fibers at the plant.

D. Designate asphalt binder supplier.

E. Use gyratory mixing and compaction temperatures supplied by the Engineer.

F. The Department Region Materials Lab verifies the Stone Matrix Asphalt Mix Design.

G. Comply with the following requirements for Stone Matrix Asphalt Mix Design.

Table 8

Stone Matrix Asphalt Mix Design - SMA Compaction Parameters	
Design Gyrations	**% of G_{mm}***
100	96.5

* G_{mm}: Maximum specific gravity of Mix.

Table 9

Stone Matrix Asphalt Mix Design Requirements	
SMA design mixing and compaction temperatures	Provided by the Engineer
Voids in Mineral Aggregate (VMA) at N_{design} AASHTO R 46, using G_{sb}. Equation based on percent of total mix.	17.0 percent minimum
Voids In Course Aggregate (Stone Matrix Asphalt Mix Design)	$VCA_{MIX} < VCA_{DRC}$
Hamburg Wheel Tracker	< 10.00 mm at 20,000 Cycles.

H. Prepare and submit 2 sets (5 samples each) of ignition oven calibration samples.
   1. Department uses these samples to determine the correction factors for the Region and Field lab ignition oven.
   2. Submit samples a minimum of three working days before paving.

I. Mortar is the dust (minus #200 material) from the mix combined with the asphalt binder and fiber. Mortar must meet the following and this Section, Article 2.5:
   1. Unaged DSR G*/sin delta $\geq$ 5 kPa
   2. RTFO aged DSR G*/sin delta $\geq$ 11 kPa
   3. PAV aged BBR Stiffness $\leq$ 1500 Mpa

J. Meet Draindown of 0.30 percent or less according to AASHTO T 305 - Determination of Draindown Characteristics in Uncompacted Bituminous Mixtures.

K. Evaluate the mortar properties of the best trial gradation using the procedure outlined in this Section, Article 2.5.

2.5 TESTING OF STONE MATRIX ASPHALT MORTARS

A. Scope
   1. Blending and specimen preparation of stone matrix asphalt (SMA) mortars to predetermine the physical characteristics of mortars used in SMA.

B. Apparatus for Preparation
   1. Balance: 2-kg capacity, sensitive to 0.1 g. Conform to the requirement of ASTM D 4753, class GP2 or AASHTO M 231, class G2.

2. Oven: capable of maintaining the needed temperature within ± 6 degrees C.
3. Hot plate: at least 700-W capacity with adjustable temperature control.
4. Sample containers: capable of holding at least 100 g of filler and 200 g of liquid asphalt binder. A seamless ointment tin is recommended.
5. Mixing tools: wooden tongue depressors, spatulas, and spoons.
6. Insulated gloves: for handling hot samples and equipment.

C. Sample Preparation Procedure
1. Dry respective aggregate fractions containing material passing the No. 200 sieve to constant weight (mass) at 110 ± 6 degrees C. Dry sieve these aggregates and collect the dust from each aggregate. Blend the fillers to meet the percent by volume on the job-mix-formula. An example of how to blend by volume can be found in AASHTO R 46.
2. Place a quart can of pre-aged liquid asphalt binder into an oven set at 165 ± 6 degrees C. Refer to this Section, Article 2.5 paragraph D.
3. Weigh 100 ± 0.1 g of minus No. 200 blended filler into the seamless ointment tin and place into a 175 ± 6 degrees C oven. The material should remain in the oven for at least 30 minutes.
4. Weigh into the filler the proper amount of liquid asphalt binder to the nearest 0.1 g.
5. Place the tin on the hot plate and hand mix with a spatula. Slowly add the proper amount of fiber (weighed to the nearest 0.1 g) and continue mixing until the mortar is homogeneous.
6. Use loose fiber of the same type to create the mortar or use a high-shear mixer when asphalt-fiber pellets are used. Asphalt-pellet fibers will not blend into the filler under low-shear mixing conditions.

D. Testing of Mortars
1. Age the liquid asphalt binder following AASHTO T 240, AASHTO R 28, or both when performing Performance Grade Asphalt Binder testing of the mortar and prior to blending with fillers and fibers.
2. Follow ASTM D 4402 except that readings should be taken as soon as the temperature stabilizes because the fillers will sink to the bottom over time.
3. Follow AASHTO T 315 except use a higher preheat temperature of 60 degrees C. This is to insure that the specimen will adhere strongly to both plates.
4. Follow AASHTO T 313 except, using aluminum molds:
   a. Place the mold over the corner of the warm hot plate so that the mold is on the hot plate and the rubber O-rings are not.

b. Gently tamp the mortar into the mold using a wooden tongue depressor. A light coating of release agent (glycerin and talc) will assist in this procedure.
c. Repeat step b until the mold is full of mortar.
d. Continue according to AASHTO T 313.

E. Reporting
1. Report as required in this Section, Article 2.4 A.

2.6 CONTRACTOR INITIATED CHANGES IN STONE MATRIX ASPHALT MIX DESIGN

A. Submit all requests in writing to the Engineer at least 12 hours before incorporating changes into production.

B. Submit a field volumetric mix design for all target changes.
1. Include documentation supporting correlation between suggested target changes and mix design volumetric requirements. Department acceptance or Contractor QC testing data is acceptable.
2. Field volumetric mix design verification consists of three sets of two gyratory specimens run at the new target gradation, asphalt binder content, or both. The Department's previous acceptance tests are acceptable for field verification.
3. The Engineer, in consultation with the Region Materials Engineer, provides written concurrence of the verified field volumetric mix design if the field volumetric mix design meets the volumetric requirements.
4. Submit a new laboratory volumetric mix design from a laboratory qualified by UDOT Central Materials if the field volumetric mix verification does not meet the volumetric requirements. Allow at least 7 working days for verification.
5. The Department may allow up to two minor target changes per project without penalty to the contractor. The Department charges $1,000 for each additional minor target change.
6. The Department performs up to two volumetric mix design verifications at no cost to the Contractor. The Department charges $3,000 for each additional laboratory or field verification required including all laboratory or field volumetric mix design verifications required due to contractor initiated target changes.

C. Submit a new laboratory volumetric mix design if changes occur in the aggregate source, asphalt binder source, or grade.

D. Do not make changes to production mix until request is reviewed and verified by the RE in consultation with the RME.

PART 3 EXECUTION

3.1 ADDING HYDRATED LIME

A. Method A, Lime Slurry or Method B, Lime Slurry Marination: Refer to Section 02746.

3.2 SMA

A. Dry aggregate to an average moisture content of not more than 0.2 percent by weight. Use AASHTO T 255 for verification. Adjust burners to avoid damage or soot contamination of the aggregate.

B. Coat with asphalt binder 100 percent of the particles passing and 98 percent of the particles retained on the No. 4 sieve.
   1. Use AASHTO T 195 for verification.
   2. Discontinue operation and make necessary corrections if material is not properly coated.

C. Maintain temperature of the SMA between identified compaction limits as defined on Volumetric Mix Design Verification Letter.
   1. Department rejects materials heated over the identified limits.
   2. Remove all material rejected by the Department for overheating.

3.3 SMA PLANT

A. Provide:
   1. Positive means to determine the moisture content of aggregate on a daily basis.
   2. Positive means to sample all material components.
   3. Sensors to measure the temperature of the SMA at discharge.
   4. The ability to maintain discharge temperature of the mix according to the mix design.

B. Asphalt Binder Storage Tanks:
   1. Provide calibrated tanks so the quantity of material remaining in the tank can be determined at any time.
   2. Provide a positive means of sampling the asphalt binder from the tanks.

C. Fiber Supply System:
   1. Provide separate proportioning device interlocked with the aggregate feed or weigh system to maintain correct proportions and uniform distribution for all rates of production and batch sizes.

2. Provide flow indicators or sensing devices interlocked with plant controls.
3. Uniformly distribute fibers in aggregate before injecting the asphalt into the mixer. (8 to 12 seconds)
4. Do not allow the fiber to become entrained in the exhaust system of the plant.

D. Mineral Filler Supply System:
1. Provide separate proportioning device interlocked with the aggregate feed or weigh system to maintain correct proportions and uniform distribution for all rates of production and batch sizes.
2. Provide flow indicators or sensing devices interlocked with plant controls.
3. Uniformly distribute filler in aggregate before injecting asphalt into the mixer.
4. Do not allow the filler to become entrained in the exhaust system of the plant.

3.4 SURFACE PREPARATION

A. Locate, reference, and protect all utility covers, monuments, curb and gutter, and other components affected by the paving operations.

B. Remove all moisture, dirt, sand, leaves, and other objectionable material from the prepared surface before placing the mix.

C. Allow sufficient cure time for prime coat/tack coat before placing SMA. Refer to Section 02748.

3.5 SURFACE PLACEMENT

A. Provide a 3:1 (horizontal to vertical) sloped edge adjacent to the next lane to be paved when full-width or echelon paving is impractical and more than one pass is required.

B. Construct the longitudinal joint to within 6 inches of the lane lines or at the center of the lane at the direction of the Engineer, but never in a wheel path. All long joints will be cored and tested for compaction according to the specification if the lift is 2 or more inches thick. Verify all edges of the adjacent areas to through lanes have straight and uniform longitudinal lines and neat vertical edges.

C. Adjust the production of the mixing plant and material delivery until a steady paver speed is maintained.

D. Do not allow construction vehicles, general traffic, or rollers to pass over the uncompacted end or edge of freshly placed mix until the mat temperature drops to a point where damage or differential compaction will not occur.

E. Taper the end of a course subjected to traffic at approximately 50:1 (horizontal to vertical).
   1. Make a transverse joint by saw or wheel cutting and removing the portion of the pass that contains the tapered end.
   2. Tack the contact surfaces before fresh mix is placed against the compacted mix.

F. Use a Material Transfer Vehicle (MTV) to apply all courses of SMA. Use an MTV that internally performs additional mixing of the SMA mix and then deposits material into the paver at a uniform temperature and consistency.

3.6 COMPACTION

A. Use a small compactor or vibratory roller in addition to normal rolling at structures.

B. Operate in a transverse direction next to the back wall and approach slab.

C. Use aggressive rolling techniques to minimize risk of under-compacted SMA courses. Use a 9 ton (minimum) roller.

D. Roll surface immediately after placement staying as close as possible to the lay-down machine and assuring proper mix design placement temperatures. Minimize the use of vibratory rollers.

E. Do not use Pneumatic tire rollers.

F. Discontinue vibration if aggregate breakdown occurs or if bleeding occurs. The material has been excessively vibrated if the proper surface texture is lost.

3.7 LIMITATIONS

A. Do not place SMA on frozen base or subbase.

B. Use a UDOT approved release agent for all equipment and hand tools used to mix, haul, and place the SMA. Contact the Engineer for approved product.

C. Do not place SMA during adverse climatic conditions such as precipitation or when roadway surface is icy or wet.

D. Place SMA from April 15, to October 15, and when the air temperature in the shade and the roadway surface temperature are above 50 degrees F.

1. The Department determines if it is feasible to place SMA outside the above limits. Obtain written approval from the Engineer before paving from October 15, to April 15.

END OF SECTION

November 14, 2012

SPECIAL PROVISION

PROJECT # S-I15-1(113)5
PIN # 12780

SECTION 02746M

HYDRATED LIME

Add the following to Article 1.6:

B. Comply with UDOT Quality Management Plan 514 Hot Mix Asphalt

Delete Article 3.1, paragraph B and replace with the following:

B. Method A: Dynamic Feed Lime Slurry
   1 Lime Slurry – One part lime and at least three parts water by weight. The amount of added water to meet the 3:1 lime slurry may be adjusted to account for the moisture in the stockpile. Use lime slurry with a minimum of one part water by weight of lime.
   2. Add at least 1 percent lime by weight of the virgin aggregate.
   3. Deliver lime slurry to the twin shaft pugmill for mixing with aggregate. The virgin aggregate/lime mixture will contain at least 3 percent water by weight of the virgin aggregate after the pugmill
   4. Adjust quantity (percent) of lime as necessary, based on results of Hamburg Wheel Tracker test.
   5. Verify that Lime Slurry equipment is operating at all times. The Engineer may require Method B, marination of the aggregate/hydrated lime mixture in the stockpile if the HMA is supplied without hydrated lime slurry treatment.

Delete Article 3.1, paragraph C4 and replace with the following:

4. Provide sufficient free moisture to thoroughly wet the aggregate and activate the lime before introducing hydrated lime.
   a. The aggregate/lime mixture will contain at least 3 percent water by weight of the virgin aggregate.

Delete Article 3.2, paragraph A and replace with the following:

A. Control, monitor, and document the lime addition process according to the requirements of the UDOT Quality Management Plan 514 Hot-Mix Asphalt.

Supplemental Specification
2012 Standard Specification Book

SECTION 02748M

PRIME COAT/TACK COAT

Delete Article 1.4, paragraph B3 and replace with the following:

3. A diluted product may be used to better control distribution when the residual application rate is small (0.03 gal/yd^2).
   a. The product will be referred to as a 1:1 or 2:1 dilute meaning 2 parts emulsion to 1 part water for the latter case when this is done.

Delete Table 2 and replace with the following:

Table 2

Application Rate (gal/yd^2)				
Existing Pavement Condition	**Residual**	**Undiluted**	**1: 1 Dilute**	**2:1 Dilute**
New HMA	0.03	0.05	0.10	0.08
Oxidized HMA	0.05	0.09	0.18	0.13
Milled HMA	0.07	0.12	0.24	0.18
Milled PCCP	0.07	0.12	0.24	0.18
PCCP	0.05	0.09	0.18	0.13

Residual – Asphalt binder content needed on the pavement.
Undiluted and 1:1 and 2:1 Dilute. Adjust the application rate if emulsion is not 60 percent residual asphalt.

Supplemental Specification
2012 Standard Specification Book

SECTION 02761

LONGITUDINAL RUMBLE STRIP

Delete Section 02761 and replace with the following:

PART 1 GENERAL

1.1 SECTION INCLUDES

A. Materials and procedures for constructing longitudinal rumble strip on the final roadway surface.

1.2 RELATED SECTIONS

A. Section 01558: Temporary Pavement Markings

B. Section 02742S: Project Specific Surfacing Requirements

1.3 REFERENCES **Not Used**

1.4 DEFINITIONS

A. HMA – Hot Mix Asphalt Pavement

B. PCCP – Portland Cement Concrete Pavement

C. SMA -- Stone Matrix Asphalt Pavement

1.5 SUBMITTALS **Not Used**

1.6 ACCEPTANCE

A. The grinds will be visually inspected at the start of installation and inspected at a minimum of once a day for each day of production, to verify a uniform application rate of asphalt flush coat or seal coat and compliance with the PV Series Standard Drawings for dimensions and spacing.

PART 2 PRODUCTS

2.1 EQUIPMENT

A. Install longitudinal rumble strip with equipment using a rotary type cutting head capable of obtaining the required groove width, depth and length in a single pass while moving in the same direction as the traffic flow.
   1. Use equipment with cutting heads having an independent suspension from the power unit to allow the head to self align with the slope of the shoulder.
   2. Use cutting heads that provide a smooth surface, approximately $^{1}/_{16}$ inch between peaks or valleys.

B. Seal longitudinal rumble strip with equipment capable of obtaining the required uniform application rate in a single pass while moving in the same direction as the flow of traffic.

PART 3 EXECUTION

3.1 INSTALLATION

A. Install longitudinal rumble strip to the dimensions and spacing as shown in PV Series Standard Drawings.
   1. Establish lane widths from plan set or existing roadway if not specified with plans, before installation of longitudinal rumble strip.
   2. Install longitudinal rumble strip after the final wearing course except when project includes a Chip Seal Coat as the final wearing course.
      a. Apply Chip Seal Coat after rumble strip has been installed.

B. Alignment Control
   1. Establish a control line using a dribble/drip line, temporary pavement marking material, or permanent application of pavement marking material according to Section 01558 in its permanent configuration and location before the installation of longitudinal rumble strip.
      a. Reestablish the pavement marking material at no additional cost to the Department if permanent application of pavement marking material is compromised, damaged or removed in any way during installation of longitudinal rumble strip or flush coat or seal coat.
      b. Establish control points at a minimum of 100 ft intervals on tangents and at 50 ft intervals on curves.

2. Maintain the longitudinal rumble strip within 2 inches of the nearest edge of control line.
    a. Maintain the grind dimensions within 10 percent of the width, depth and length dimensions defined in the PV series Standard Drawings.

C. Construct a 500 ft long test section each production day to demonstrate that the equipment, personnel, and methods of operation are capable of producing acceptable results.
1. Do not proceed with work until it is demonstrated that the required dimensions, alignment, and smoothness can be achieved without tearing or otherwise damaging the pavement.
2. Do not proceed with work until it is demonstrated that the uniform application of asphalt flush coat or seal coat is being achieved at the specified application rate over the required area.
3. Repair or replace pavement in areas where longitudinal rumble strips are unacceptable as determined by the Engineer.
    a. Complete all repairs at no additional cost to the Department.
4. Replace or deduct price paid for longitudinal rumble strips not installed according to Standards as follows;
    a. Deduct 25 percent for longitudinal rumble strips installed within 2 inches of allowable tolerance.
    b. Deduct 50 percent for longitudinal rumble strips installed greater than 2 inches but less than 4 inches out of allowable tolerance.
    c. Remove and replace longitudinal rumble strips greater than 4 inches out of allowable tolerance by milling 2 inches deep and three times the rumble strip width.
    d. Fill milled section with like material and reinstall longitudinal rumble strips according to Standards.

D. Clean the surface of all dirt, sand, dust, and other objectionable material to the satisfaction of the Engineer before applying asphalt flush coat.

E. Apply asphalt flush coat or seal coat on HMA and SMA surfaces after longitudinal rumble strips have been installed in the roadway.
1. Apply asphalt flush coat on HMA SMA surfaces at a uniform application rate according to Section 02742S.
2. Refer to Section 02742S for asphalt flush coat or seal coat material.
3. Adjust speed and application method to achieve uniform application rate and to prevent shadow areas of thinner application depths according to this Section, paragraph 2.1.B.
4. Reapply asphalt flush coat or seal coat to any rumble strips that do not have a uniform application at no additional cost to the Department.

F. Do not apply flush coat on PCCP surfaces.

G. Remove resulting debris before opening the adjacent lane to traffic.
   1. Dispose of material according to Federal, State, and Local regulations and in a manner acceptable to the Engineer.

END OF SECTION

October 5, 2015

SPECIAL PROVISION

PROJECT # S-I15-1(113)5
PIN # 12780

SECTION 02765M

PAVEMENT MARKING PAINT

Delete Article 1.3, paragraphs M through S and replace with the following:

M. ASTM E 1710: Test Method for Measurement of Retroreflective Pavement Marking Materials Using a Portable Retroreflectometer

N. Environmental Protection Agency Testing Methods

O. Federal Specification

P. Federal Standards

Q. Manual on Uniform Traffic Control Devices (MUTCD)

R. UDOT Materials Manual of Instruction

S. UDOT Minimum Sampling and Testing Requirements

T. UDOT Quality Management Plans

Delete Article 1.6 paragraphs D and E and replace with the following:

D. The Engineer will:
   1. Visually inspect longitudinal lines and transverse markings to verify compliance with the required dimensions.
   2. Inspect at the end of each production day or more frequently as required.
   3. Verify quantities applied by one of the following methods for paint and one of the methods for beads.
      a. Methods for paint:
         1) Measure paint tanks before and after application
         2) Witness the meter readings before and after application. A print out of meter readings instead of witnessing may be accepted at the Engineer's discretion.

b. Method for beads:
   1) Measure bead tanks before and after application.
   2) Accept beads according to retroreflectivity Performance criteria. Refer to this Section, Article 3.2, paragraph E2 below.

4. Sample in the field according to the UDOT Quality Management Plan 513, Pavement Marking Paint, and the UDOT Minimum Sampling and Testing Requirements.

E. Repaint any line or legend failing to meet bead application rates or retroreflectivity requirements and dimensional requirements.
   1. Do not remove earlier application.

Delete Article 3.2, paragraphs E and replace with the following:

E. Glass Sphere (Beads) –
   1. Apply at least 8 lb/gal of paint, the full length and width of line and pavement markings.
      a. Calibrate bead guns and measure bead distribution according to UDOT Materials Manual of Instruction 932, Procedure for Sampling and Accepting Pavement Marking Paint and Beads.
      b. Do not apply glass beads to contrast lines (black paint).
   2. Performance option for bead measurement and acceptance.
      a. Measure retroreflectivity within 7 days of pavement marking application.
      b. Use a portable retroreflectometer that meets requirements of ASTM E 1710
      c. Identify three 400-foot sections per 10 miles of pavement marking. For pavement markings less than 2 miles sample only one 400-foot section.
      d. Take a minimum of 16 approximately evenly spaced readings for edge lines, lane lines and centerlines throughout each section in each direction of travel.
      e. The Engineer may select the sections to be tested.
      f. Average all readings of each line to determine the retroreflectivity measurement for each line.
      g. UDOT may verify with quality assurance testing within 21 days of pavement marking application

h. Determine the acceptability and pay factors for retroreflectivity using Table 5

.

Table 5

Pay Adjustments for Retroreflectivity Requirements		
Material Type	Retroreflectivity (R)	Pay Factor
Waterborne Traffic Paint (White)	>249	1.0
	225 - 249	.75
	200 - 224	.50
	< 200	0*
Waterborne Traffic Paint (Yellow)	>174	1.0
	150-174	.75
	125-149	.50
	< 125	0*

* Repaint pavement markings at no cost to the Department. Do not remove earlier application.

Supplemental Specification
2012 Standard Specification Book

SECTION 02765M

PAVEMENT MARKING PAINT

Delete Article 1.3, paragraphs M through R and replace with the following:

M. Environmental Protection Agency Testing Methods

N. Federal Specification

O. Federal Standards

P. Manual on Uniform Traffic Control Devices (MUTCD)

Q. UDOT Materials Manual of Instruction

R. UDOT Minimum Sampling and Testing Requirements

S. UDOT Quality Management Plans

Delete Article 2.1, paragraph A, Table 4 and replace with the following:

Table 4

Paint Requirements				
Property	White	Yellow	Black	Test
Pigment – Percent by weight, minimum	62.0	62.0	62.0	ASTM D 3723
Total Solids – Percent by weight, minimum	77.0	77.0	77.0	ASTM D 1644
Nonvolatile vehicle – Percent by weight vehicle, minimum*	43.0	43.0	43.0	ASTM D 3723 ASTM D 1644
Viscosity, KU @ 77 degrees F	80 – 95	80 – 95	80 – 95	ASTM D 562
Density, lb/gal, minimum	14.0	14.0	14.0	ASTM D 1475
Volatile Organic Content (VOC) – g/L, maximum	100	100	100	ASTM D 3960
Titanium Dioxide Content, lb/gal	1.0 min	0.2 max	N/A	ASTM D 5381
Color Definition	37875	33538	N/A	Federal Standard 595B
Directional Reflectance Minimum	90.0	50.0	N/A	ASTM E 1347
Dry Opacity – Minimum (5 mils wet)	0.95	0.95	N/A	ASTM D 2805

* Binder – 100 percent acrylic cross-linking polymer, by weight, as determined by infrared analysis and other chemical analysis available to the Department. Refer to ASTM D 2205.

Delete Article 2.2 and replace with the following:

2.2 GLASS SPHERES (BEADS) USED IN PAVEMENT MARKING PAINT

A. Heavy metal concentration: Manufacturer must provide a certificate of compliance stating that all beads contain no more than the amounts listed for the following materials as determined by testing performed according to EPA test methods 3052 and 6010C. Other suitable x-ray fluorescence spectrometry analysis methods may be used to screen samples of glass spheres for arsenic, antimony and lead content.

Table 5

Heavy Metal Materials	
Material	**Level (ppm, total)**
Arsenic	200
Antimony	200
Lead	200

B. Longitudinal Lines – Refer to AASHTO M 247, Specific Properties, with the following exceptions:

1. Gradation:

Table 6

Gradation	
Sieve Size	**Accumulated Percent Passing**
No. 18	65 – 80
No. 30	30 – 50
No. 50	0 – 5

2. Coating – Dual coating for optimum adhesion and embedment.
3. Roundness – 80 percent true spheres below the number 30 sieve. Refer to ASTM D 1155
4. Color/Clarity – Colorless/clear and free of carbon residue.
5. Refractive Index – Minimum 1.51 by oil immersion method.
6. Air Inclusions – Less than 5 percent by visual inspection.
7. Hardness – Beads above the number 30 sieve exhibit an average hardness of C70.5 when measured using the Rockwell C scale method and using a minimum sample of 100 beads.
8. Crushing Strength – Beads above the number 30 sieve exhibit an average crushing strength of 60,000 psi when measured by the L/D^2 method and with a minimum sample of 100 beads.
9. Chemical Resistance – Beads resistant to hydrochloric acid, water, calcium chloride, and sodium sulfide. TT-B Federal Specification 1325C sections 4.3.6 to 4.3.9.

C. Transverse Markings – Refer to AASHTO M 247, Specific Properties, with the following exceptions:

1. Gradation:

Table 7

Gradation	
Sieve Size	**Accumulated Percent Passing**
No. 20	90 – 95
No. 30	45 – 70
No. 50	5 – 25
No. 80	0 – 5

2. Coating – Dual coating for optimum adhesion and embedment.
3. Roundness – The glass beads will have at least 75 percent true spheres.
4. Refractive index – Minimum 1.51 by oil immersion method.
5. Air Inclusions – Less than 10 percent by visual inspection.
6. Have at least 80 percent true spheres.

D. Beads used in Temporary Pavement Markings. Meet the above or AASHTO M 247 Type II uniform gradation.

Delete Article 3.2, paragraph B2c and replace with the following:

c. 8 inch Solid Line – From 95 to 120 ft/gal. Use the following calculation to determine wet mil thickness if approximation is outside the range for the desired line type.

Supplemental Specification
2012 Standard Specification Book

SECTION 02768M

Pavement Marking Materials

(Warranty Specification)

Delete Article 1.5, paragraph B and replace with the following:

B. Installation Warranty

1. Manufacturer provides a warranty bond or letter of credit to the Department's Engineer for Maintenance to cover the total installed price of the material on this project and any other projects where the manufacturer's material is installed.
2. Submit material type, manufacturer, installation date, quantities, and project number to the Engineer for each project.
3. Warranty bond or letter of credit covers the specified service life of the materials and begins after all pavement markings are installed and accepted.

Supplemental Specification
2012 Standard Specification Book

SECTION 02776

CONCRETE FLATWORK

Delete Section 02776 and replace with the following:

PART 1 GENERAL

1.1 SECTION INCLUDES

A. Concrete flatwork items such as sidewalk, plowable end section, median filler, curb, gutter, concrete lined ditch, and driveway.

1.2 RELATED SECTIONS

A. Section 02056: Embankment, Borrow, and Backfill

B. Section 02316: Roadway Excavation

C. Section 02721: Untreated Base Course

D. Section 03055: Portland Cement Concrete

E. Section 03152: Concrete Joint Control

F. Section 03211: Reinforcing Steel and Welded Wire

G. Section 03390: Concrete Curing

1.3 REFERENCES

A. ASTM C 979: Pigments for Integrally Colored Concrete

1.4 DEFINITIONS **Not Used**

1.5 SUBMITTALS

A. 1 ft^2 sample of colored concrete representative of the color provided by the Engineer for approval.

B. Manufacturer's product data, specifications, and mixing instructions for concrete colorant.

1.6 ACCEPTANCE

A. Concrete Flatwork may be accepted at a reduced price when the concrete strength is below that specified.
   1. Price adjustment pay factor following Section 03055.

PART 2 PRODUCTS

2.1 CONCRETE

A. Class AA(AE). Refer to Section 03055.

B. Colorant – High purity, chemically inert, unfading, and alkali-fast synthetic pigment coloring material according to ASTM C 979.

2.2 PREMOLDED JOINT FILLER

A. Refer to Section 03152.

2.3 UNTREATED BASE COURSE

A. Refer to Section 02721.

2.4 REINFORCING STEEL

A. Coated reinforcing steel. Refer to Section 03211.

PART 3 EXECUTION

3.1 GENERAL

A. Construct as shown in GW Series Standard Drawings and the plans.

3.2 PREPARATION

A. Construct subgrade to plan elevations. Refer to Section 02056 and Section 02316.

B. Place and compact untreated base course.

C. Forms
   1. Use wood, metal, reinforced fiberglass, or plastic forms free of warps or bends and of sufficient strength to prevent deflection during the placement of concrete.
      a. Transition smoothly from curves to straight sections. Keep forms in curves free of flat sections and sharp bends.
      b. Anchor securely in place.
      c. Clean the inside surface of all dirt, concrete, and foreign material before concrete placement.
   2. May use slip form machines.

D. Concrete flatwork coloring when required.
   1. Match concrete color to the approved samples.
   2. Thoroughly mix color pigment in the concrete before placing.

3.3 PLACE AND FINISH CONCRETE

A. Dampen the subgrade just before concrete placement.

B. Hand methods of strike-off and consolidation are permitted.

C. Finish the surface smooth with a concrete finishing float.
   1. Do not add water to the surface of the concrete.
   2. Remove form marks and irregularities.

D. Round edges to a ½ inch radius.

E. Brush exposed surfaces to a transverse broom finish except as follows:
   1. Provide a parallel broom finish for gutters.

3.4 EXPANSION AND CONTRACTION JOINTS

A. Place joints perpendicular to the subgrade and as shown.

B. Contraction Joints
   1. Use ⅛ inch to $^{3}/_{16}$ inch thick steel plates.
   2. Space the joints 10 ft apart.
   3. Remove the templates as soon as the concrete initially sets.
   4. Cut joint 1½ inch deep when using slip form method to place the concrete.

C. Expansion Joints
   1. Use ½ inch thick premolded expansion joint filler.

2. Place an expansion joint every 30 ft with the following exception not to place:
   a. Slip form method to place concrete.
   b. Gutters.
3. Place joint filler between the sidewalk or median filler and the curb or adjacent pavement, sidewalk, driveway pavement, or structure.

3.5 CONCRETE CURING

A. Refer to Section 03390.

END OF SECTION

Supplemental Specification
2012 Standard Specification Book

SECTION 02821M

CHAIN LINK FENCING AND GATES

Delete Article 1.3, paragraph H and replace with the following:

H. ASTM F 1043: Strength and Protective Coatings on Steel Industrial Chain Link Fence Framework

I. ASTM F 1083: Pipe, Steel, Hot-Dipped Zinc-Coated (Galvanized) Welded, for Fence Structures

Delete Article 2.2, paragraph A1 and replace with the following:

1. Schedule 40, hot-dip galvanized coated pipe. Refer to ASTM F 1043 and ASTM F 1083.

Supplemental Specification
2012 Standard Specification Book

SECTION 02822M

RIGHT-OF-WAY FENCE AND GATE

Delete Article 1.3, paragraph G and H and replace with the following:

G. ASTM A 641: Zinc-Coated (Galvanized) Carbon Steel Wire

H. American Wood-Preservers' Association (AWPA) Book of Standards

I. National Electrical Code (NEC)

Delete Article 2.5, paragraph B8 and replace with the following:

8. Apply field treatment preservatives according to AWPA Standard M4 after field drilling. Refer to AWPA Standard M4, Section 7 for accepted field treatment preservative systems.

SPECIAL PROVISION

PROJECT # S-I15-1(113)5
PIN # 12780

SECTION 02831S

RETAINING WALL- ALTERNATE SYSTEMS

Add Section 02831:

PART 1 GENERAL

1.1 SECTION INCLUDES

A. Select from the following wall systems for retaining walls indicated as Contractor-selected alternative systems. Refer to the project plans for situation and layout drawings.
   1. MSE Wall- Reinforced Earth Company Retaining Wall (refer to Section 02833S)
   2. MSE Wall- SSL MSE *Plus* Retaining Wall (refer to Section 02833S)
   3. MSE Wall- Tricon Retained Soil Wall (refer to Section 02833S)
   4. MSE Wall- VISTAWALL Stabilized Earth Wall (refer to Section 02833S)
   5. MSE Wall- ARES Geogrid Retaining Wall (refer to Section 02834S)
   6. PMGW – Mountain West Precast Redi-Rock Wall (refer to Section 02839S)
   7. PMGW – Harper Precast ReCon Wall (refer to Section 02839S)
   8. PMGW – Nephi Sandstone Precast Redi-Rock Wall (refer to Section 02839S)

1.2 RELATED SECTIONS

A. Section 02832S: Select Backfill for MSE Wall

B. Section 02833S: MSE Walls Using Concrete Facing Panels and Metal Reinforcing Elements

C. Section 02834S: MSE Walls Using Concrete Facing Panels and Geogrid Reinforcing Elements

D. Section 02839S: Prefabricated Modular Gravity Wall (PMGW) Systems Using Large Modular Block Units

1.3 REFERENCES

A. AASHTO LRFD Bridge Design Specifications

B. AASHTO Interim Specifications for Highway Bridges

C. FHWA Design of Mechanically Stabilized Earth Walls and Reinforced Soil Slopes – Volume I, Federal Highway Administration Report No. FHWA-NHI-10-024

1.4 DEFINITIONS Not Used

1.5 WALL SYSTEM SELECTION

A. Notify the Engineer in writing before the preconstruction conference which option listed in Article 1.1 will be used.

B. Use only one wall system for the Contractor-selected alternative.

C. Do not change the wall type after the preconstruction conference without written approval from the Engineer.

1.6 DESIGN REQUIREMENTS

A. Incorporate FHWA Design of Mechanically Stabilized Earth Walls and Reinforced Soil Slopes guidelines, AASHTO LRFD Specifications, and Interim Specifications for Highway Bridges in design of the selected wall system in addition to, or as modified by, the following:

1. For all walls use a design earthquake peak horizontal ground acceleration coefficient of 0.201 g, corresponding to a 7% probability of exceedance in 75 years.
2. Design retaining wall panel/modular block connections in all cases to not fail during the seismic event corresponding to 3% probability of exceedance in 75 years, use a design earthquake peak horizontal ground acceleration coefficient of 0.290 g.
3. The Contractor-selected Wall Company is responsible for all stability calculations, except global stability and bearing capacity.
4. Minimum service life of 75 years.
5. The Wall Company is responsible to ensure that drainage features do not negatively impact the wall system, and that the drainage system can function properly through/beneath the wall as the Project Designer intends, without negatively impacting the wall system. This includes checking the drainage system details, and/or developing appropriate MSE reinforcement design details in the vicinity of the drainage features (pipes, catch basins, etc.) within the reinforcement mass, and for the outlet point at the wall face (see article 1.6.A.2).

6. Sections 02832S through 02839S as applicable for the selected wall system.
7. Provide corrosion protection for metallic reinforcement by one of the following two measures:
   a. Provide sacrificial steel sufficient for a corrosion rate of at least 0.80 mils per exposed surface per year after 16 years of corrosion protection service allowed for the galvanized coating.
   b. Provide a protective geomembrane (either PVC or HDPE) of at least 30 mils thickness a minimum of 2 feet below the base of the pavement section (below the bottom of the granular borrow layer), sloping downwards towards the back of the reinforced mass (i.e. away from the wall face) at a grade of 4 percent, and lapped upward against the back side of the wall facing. Design the metallic reinforcement to provide sacrificial steel sufficient for the following minimum corrosion rates per exposed surface per year, after 16 years of corrosion protection service for the galvanized coating:
      1) Above the Geomembrane: 0.80 mils
      2) Below the Geomembrane: 0.50 mils
8. Use a vertical spacing of primary reinforcement not exceeding 30 inches for single-stage walls, or 24 inches for two-stage walls to provide a coherent MSE reinforced soil mass. This may require modification of panels.
9. In accordance with Section 11 of the AASHTO LRFD Bridge Design Specifications, provide horizontal benches at least 4 feet in width at the base of walls to be founded on earth slopes.
   a. Benches may be eliminated for walls located adjacent to concrete slope-protected slopes.
10. Use the following soil design properties:

Wall R-800 (MSE Panel Wall : Boring B-14 Basis)			
SOIL PROPERTIES	WALL BACKFILL	RETAINED SOIL	FOUNDATION SOIL
Moist Density (pcf)	*	130	120
Friction Angle (deg)	*	28	35
Cohesion (psf)	*	0	250
Factored Bearing Resistance (psf)	N/A	N/A	6000

Wall R-801 (PMGW : Boring B-16 Basis)			
SOIL PROPERTIES	WALL BACKFILL	RETAINED SOIL	FOUNDATION SOIL
Moist Density (pcf)	*	130	120
Friction Angle (deg)	*	35	32
Cohesion (psf)	*	75	50
Factored Bearing Resistance (psf)	N/A	N/A	3200

*The specific wall backfill characteristics are an integral part of the MSE wall design and are to be determined for the specific selected material by the Wall Company (with wall backfill meeting the requirements of Section 02832S).

1.7 SUBMITTALS

A. Submit for review working drawings and design calculations to the Engineer and to the Department's Geotechnical Engineer, prepared and signed by a licensed professional engineer, for the wall construction including all plans, profiles, cross sections, quantities, and details that address the following:

1. Cast-in-place concrete coping/cap to the facing panels/blocks to be aesthetically pleasing and to adequately support any fence and/or barrier. Do not use precast coping without prior written approval from the Engineer.
2. Provisions for facilities which penetrate the wall face or soil reinforcing elements (including, but not limited to, drainage catch basins, piping, foundation elements, guard-rail posts, and other buried facilities).
3. MSE wall design accommodates surface and subsurface drainage details.
4. Proposed architectural treatment detail for wall facing elements and proposed color of concrete. Provide architectural treatment for all walls consistent throughout the project and matching all other structural elements incorporated in the project.
5. Design calculations sufficient to determine the walls have been designed in accordance with the required criteria.

B. Allow up to 10 working days for the Engineer's review. Within this time, the Engineer will provide either written acceptance of the submittals with any exceptions noted or notification the submittals are insufficient.

1. Upon receiving notification the submittals are insufficient, provide new submittals and allow another two-week period for the Engineer's review.
2. Do not start wall construction until receiving full written acceptance by the Engineer.

1.8 ACCEPTANCE

A. Non-Conformance of Select Backfill for MSE Walls
1. Select Backfill placed and found to be out of conformance with the chemical characteristic requirements of Section 02832S, may be allowed to remain in place at a reduced price in accordance with this paragraph as decided by the Engineer. Refer to Section 02832S for sampling and testing requirements.
2. The Engineer will use the Contractor's bid price and the applicable pay factor in Table 1 to calculate the price adjustment.
3. When deviations exceed those listed for a pay factor of 0.50 in Table 1, have the Wall Company evaluate the backfill to determine whether the wall system meets the required design life.
   a. If the Wall Company determines the wall system meets the required design life, the wall may be accepted with a pay factor less than 0.50 as decided by the Engineer.

B. Non-Conformance for Out-of-Tolerance Wall Facing Elements
1. Provided structural adequacy can be demonstrated, facing elements either placed or that become out-of-tolerance from those specified in the applicable wall system section (02833S through 02839S) before final acceptance may be allowed to remain in place at a reduced price in accordance with this paragraph as decided by the Engineer.
2. The Engineer will use the Contractor's bid price and the applicable pay factor in Table 2 to calculate the price adjustment.
3. The Wall Company and the Engineer will evaluate all wall facing element cases when deviations exceed those listed for a pay factor of 0.50 in Table 2 to determine whether the wall system has sufficient structural integrity and is aesthetically acceptable.
   a. If the Wall Company determines the wall system has sufficient structural integrity, the wall may be accepted at a pay factor less than 0.50 as decided by the Engineer.

C. Price adjustment calculation. The applicable pay factors in Tables 1 and 2 will be applied to the entire wall. However, only the most critical of any

one of the backfill criteria or the facing elements tolerances (i.e. the one having the lowest pay factor), will be applied.

PART 2 PRODUCTS

2.1 MATERIALS

A. As specified in Sections 02832S through 02839S for the selected wall system.

PART 3 EXECUTION

3.1 INSTALLATION

A. As specified in Sections 02832S through 02839S for the selected wall system.

3.2 PRICE REDUCTION FOR NON-COMFORMING WORK

TABLE 1

PAY FACTORS FOR NON-CONFORMING MSE WALL SELECT BACKFILL						
Deviations of Backfill Chemical Test Results from the Limits Specified in Section 02832S*						
	Pay Factor	1 Test	Avg. of 2 Tests	Avg. of 3 Tests	Avg. of 4 Tests	Avg. of 5 or More Tests
Resistivity (ohm-cm) AASHTO T 288	1.00	0 to 200	0 to 190	0 to 180	0 to 170	0 to 150
	0.95	201 to 400	191 to 380	181 to 360	171 to 340	151 to 300
	0.90	401 to 600	381 to 570	361 to 540	341 to 510	301 to 450
	0.80	601 to 800	571 to 760	541 to 720	511 to 680	451 to 600
	0.70	801 to 1000	761 to 950	721 to 900	681 to 850	601 to 750
	0.60	1001 to 1200	951 to 1140	901 to 1080	851 to 1020	751 to 900
	0.50a	over 1200	over 1140	over 1080	over 1020	over 900
a - But no one test below 1600 ohm-cm will be accepted.						
pH AASHTO T 289	1.00	0 to 0.20	0 to 0.18	0 to 0.16	0 to 0.14	0 to 0.12
	0.90	0.21 to 0.40	0.19 to 0.36	0.17 to 0.32	0.15 to 0.28	0.13 to 0.24
	0.80	0.41 to 0.60	0.37 to 0.54	0.33 to 0.48	0.29 to 0.42	0.25 to 0.36
	0.70	0.61 to 0.80	0.55 to 0.72	0.49 to 0.64	0.43 to 0.56	0.37 to 0.48
	0.60	0.81 to 1.00	0.73 to 0.90	0.65 to 0.80	0.57 to 0.70	0.49 to 0.60
	0.50b	---	over 0.90	over 0.80	over 0.70	over 0.60
b - But no one test below 5.0 or above 10.0 will be accepted						
Chlorides (ppm) AASHTO T 291	1.00	0 to 14	0 to 12	0 to 10	0 to 8	0 to 6
	0.95	15 to 28	13 to 24	11 to 20	9 to 16	7 to 12
	0.90	29 to 42	25 to 36	21 to 30	17 to 24	13 to 18
	0.80	43 to 56	37 to 48	31 to 40	25 to 32	19 to 24
	0.70	57 to 70	49 to 60	41 to 50	33 to 40	25 to 30
	0.60	71 to 84	61 to 72	51 to 60	41 to 48	31 to 36
	0.50c	over 84	over 72	over 60	over 48	over 36
c - But no one test above 200 ppm will be accepted.						
Sulfates (ppm) AASHTO T 290	1.00	0 to 50	0 to 45	0 to 40	0 to 35	0 to 30
	0.95	51 to 90	46 to 80	41 to 70	36 to 60	31 to 50
	0.90	91 to 130	81 to 115	71 to 100	61 to 85	51 to 70
	0.80	131 to 170	116 to 150	101 to 130	86 to 110	71 to 90
	0.70	171 to 210	151 to 185	131 to 160	111 to 135	91 to 110
	0.60	211 to 250	186 to 220	161 to 190	136 to 160	111 to 130
	0.50d	over 250	over 220	over 190	over 160	over 130
d - But no one test above 500 ppm will be accepted.						

* Refer to Section 02832S for minimum sampling and testing frequency. The Engineer determines locations and any additional tests required to evaluate the overall backfill mass.

TABLE 2

PAY FACTORS FOR OUT-OF-TOLERANCE MSE WALL FACING ELEMENTS						
Mean of the Deviations of Wall Placement Tolerances from the Limits Specified in Section 02833S to 02840S (based on the percentage of wall face having the maximum out-of-tolerance measurements)						
	Pay Factor	**1 to 5%**	**6 to 10%**	**11 to 20%**	**21 to 30%**	**30% or more**
Horizontal Alignment (percent) Spec: 0.7%	1.00	0 to 0.40	0 to 0.35	0 to 0.30	0 to 0.25	0 to 0.20
	0.90	0.41 to 0.80	0.36 to 0.70	0.31 to 0.60	0.26 to 0.50	0.21 to 0.40
	0.80	0.81 to 1.20	0.71 to 1.05	0.61 to 0.90	0.51 to 0.75	0.41 to 0.60
	0.70	1.21 to 1.60	1.06 to 1.40	0.91 to 1.20	0.76 to 1.00	0.61 to 0.80
	0.60	1.61 to 2.00	1.41 to 1.75	1.21 to 1.50	1.01 to 1.25	0.81 to 1.00
	0.50	2.01 or more	1.76 or more	1.51 or more	1.26 or more	1.01 or more
Vertical Alignment* (percent) Spec: 0.7%	1.00	0 to 0.40	0 to 0.35	0 to 0.30	0 to 0.25	0 to 0.20
	0.90	0.41 to 0.80	0.36 to 0.70	0.31 to 0.60	0.26 to 0.50	0.21 to 0.40
	0.80	0.81 to 1.20	0.71 to 1.05	0.61 to 0.90	0.51 to 0.75	0.41 to 0.60
	0.70	1.21 to 1.60	1.06 to 1.40	0.91 to 1.20	0.76 to 1.00	0.61 to 0.80
	0.60	1.61 to 2.00	1.41 to 1.75	1.21 to 1.50	1.01 to 1.25	0.81 to 1.00
	0.50	2.01 or more	1.76 or more	1.51 or more	1.26 or more	1.01 or more
Plumbness* (percent) Spec: 0.5%	1.00	0 to 0.50	0 to 0.41	0 to 0.32	0 to 0.23	0 to 0.18
	0.95	0.51 to 0.64	0.42 to 0.54	0.33 to 0.43	0.24 to 0.33	0.19 to 0.26
	0.90	0.65 to 0.78	0.55 to 0.66	0.44 to 0.54	0.34 to 0.43	0.27 to 0.35
	0.85	0.79 to 0.92	0.67 to 0.79	0.55 to 0.66	0.44 to 0.52	0.36 to 0.43
	0.80	0.93 to 1.06	0.80 to 0.91	0.67 to 0.77	0.53 to 0.62	0.44 to 0.52
	0.70	1.07 to 1.20	0.92 to 1.04	0.78 to 0.88	0.63 to 0.72	0.53 to 0.60
	0.60	1.21 to 1.34	1.05 to 1.17	0.89 to 0.99	0.73 to 0.82	0.61 to 0.68
	0.50	1.35 or more	1.18 or more	1.00 or more	0.83 or more	0.69 or more
Levelness (percent) Spec: 0.5%	1.00	0 to 0.30	0 to 0.28	0 to 0.26	0 to 0.24	0 to 0.22
	0.90	0.31 to 0.60	0.29 to 0.56	0.27 to 0.52	0.25 to 0.48	0.23 to 0.44
	0.80	0.61 to 0.90	0.57 to 0.84	0.53 to 0.78	0.49 to 0.72	0.45 to 0.66
	0.70	0.91 to 1.20	0.85 to 1.12	0.79 to 1.04	0.73 to 0.96	0.67 to 0.88
	0.60	1.21 to 1.50	1.13 to 1.40	1.05 to 1.30	0.97 to 1.20	0.89 to 1.10
	0.50	1.51 or more	1.41 or more	1.31 or more	1.21 or more	1.11 or more
Joint Width (inches) Specs: Panel: 0.5 – 1.2 Block: 0.12– 0.5	1.00	0 to 0.10	0 to 0.09	0 to 0.08	0 to 0.07	0 to 0.06
	0.90	0.11 to 0.20	0.10 to 0.18	0.09 to 0.16	0.08 to 0.14	0.07 to 0.12
	0.80	0.21 to 0.30	0.19 to 0.27	0.17 to 0.24	0.15 to 0.21	0.13 to 0.18
	0.70	0.31 to 0.40	0.28 to 0.36	0.25 to 0.32	0.22 to 0.28	0.19 to 0.24
	0.60	0.41 to 0.50	0.37 to 0.45	0.33 to 0.40	0.29 to 0.35	0.25 to 0.30
	0.50	0.51 or more	0.46 or more	0.41 or more	0.36 or more	0.31 or more
Joint Offset (inches) Specs: Panel: 0.4 Block: 0.25	1.00	0 to 0.20	0 to 0.19	0 to 0.18	0 to 0.17	0 to 0.16
	0.90	0.21 to 0.40	0.20 to 0.38	0.19 to 0.36	0.18 to 0.34	0.17 to 0.32
	0.80	0.41 to 0.60	0.39 to 0.57	0.37 to 0.54	0.35 to 0.51	0.33 to 0.48
	0.70	0.61 to 0.80	0.58 to 0.76	0.55 to 0.72	0.52 to 0.68	0.49 to 0.64
	0.60	0.81 to 1.00	0.77 to 0.95	0.73 to 0.90	0.69 to 0.85	0.65 to 0.80
	0.50	1.01 or more	0.96 or more	0.91 or more	0.86 or more	0.81 or more

* For modular block walls these tolerances are measured from the specified wall batter as indicated in 02835 S and 02836 S.

END OF SECTION

August 11, 2016

SPECIAL PROVISION

PROJECT # S-I15-1(113)5
PIN # 12780

SECTION 02832S

SELECT BACKFILL FOR MSE WALLS

Add Section 02832:

PART 1 GENERAL

1.1 SECTION INCLUDES

A. Placement procedures and requirements for backfill used in constructing MSE walls.

1.2 RELATED SECTIONS

A. Section 02056: Embankment, Borrow, and Backfill

B. Section 02831S: Retaining Wall-Alternate Systems

1.3 REFERENCES

A. AASHTO T 27: Sieve Analysis of Fine and Coarse Aggregates

B. AASHTO T 90: Determining the Plastic Limit and Plasticity Index of Soils

C. AASHTO T 99: Moisture-Density Relations of Soils Using a 2.5-kg (5.5-lb) Rammer and a 305-mm (12 in.) Drop

D. AASHTO T 104: Soundness of Aggregate by Use of Sodium Sulfate or Magnesium Sulfate

E. AASHTO T 236: Direct Shear Test of Soils Under Consolidated Drained Conditions

F. AASHTO T 267: Determination of Organic Content in Soils by Loss on Ignition

G. AASHTO T 288: Determining Minimum Laboratory Soil Resistivity

H. AASHTO T 289: Determining pH of Soil for Use in Corrosion Testing

I. AASHTO T 290: Determining Water-Soluble Sulfate Ion Content in Soil

J. AASHTO T 291: Determining Water-Soluble Chloride Ion Content in Soil

K. AASHTO T 310: In-Place Density and Moisture Content of Soil and Soil-Aggregate by Nuclear Methods (Shallow Depth)

L. FHWA Publication No. FHWA-NHI-00-044

1.4 SUBMITTALS

A. Provide the Engineer with a certificate of compliance, from an AASHTO accredited and UDOT qualified testing lab, certifying the material complies with this section.
   1. Provide the Engineer with copies of the results of all tests performed to determine the Select Backfill source meets the requirements of this section.

B. Provide the Engineer with copies of test results from a UDOT qualified lab for the tests described under article 1.5, Acceptance.

1.5 ACCEPTANCE

A. In addition to the initial testing to verify the Select Backfill source meets the requirements of this section, at a minimum, obtain on-site samples during construction and perform testing at the following frequencies.
   1. Gradation: Every 5,000 cubic yards of backfill used
   2. Electrochemical: Every 10,000 cubic yards of backfill used

B. Include all costs for sampling and testing in the bid price for the work.
   1. The Department will make no separate payment for the cost of sampling and testing required in accordance with this section, except as follows:
   2. The Engineer reserves the right to require additional testing, such as when suspecting a change in the Select Backfill.
      a. When additional testing performed at the direction of the Engineer indicates there is no change in the material and the material is in compliance with the requirements of this section, the Department will pay for the cost of additional sampling and testing as extra work.

C. Density
   1. The Department will perform at least one in-place moisture/density determination per lift of backfill for each 100 feet of wall length (minimum two tests per lift) in accordance with AASHTO T 310.

a. Tests will be made at random locations and/or at specific locations determined by the Engineer.

2. Do not proceed with the placement of each layer of soil reinforcement and overlying lift of backfill until the Engineer indicates and records that all backfill placement and density requirements (including in the 3-foot light compaction-equipment zone) have been met.

PART 2 PRODUCTS

2.1 SELECT BACKFILL

A. Use backfill free from frozen, organic, and otherwise deleterious materials. Conform to the following gradation limits as determined by AASHTO T 27:

TABLE 1

Select Backfill Gradation (percent passing)		
Sieve Size	**Metallic Reinforcement**	**Geogrid Reinforcement**
4 inch	100	–
¾ inch	–	100
No. 40	0 – 60	0 – 60
No. 200	0 –15	0 –15

B. Geogrid reinforcement may use the Select Backfill gradation specified in Table 1 for metallic reinforcement only under the following conditions:

1. Make arrangements with the wall company to perform site and material specific installation damage testing with a representative sample of the proposed backfill.
   a. Perform testing in accordance with the guidelines provided in sections 4.5 and 5.1 of FHWA Publication No. FHWA-NHI-00-044. Determine the installation damage reduction factor in accordance with the test, but no less than 1.2.
   b. Assume all costs for performing the tests and certification of the test results by a registered engineer qualified in this subject/field.
   c. Assume any additional costs for the purchase of materials and/or construction of the wall based on the installation damage reduction factor obtained from the testing.

2. Provide additional material specific installation damage testing at the direction of the Engineer when a change in the backfill characteristics from the original tested representative sample is suspected.
   a. Assume all costs for performing this additional testing and certification of the test results by a registered engineer.
   b. Assume any additional costs for the purchase of materials and/or construction of the wall based on the installation damage reduction factor obtained from additional testing.

C. Use backfill with a Plasticity Index (PI) of 6 or less, as determined by AASHTO T 90.

D. Use backfill with an internal friction angle of not less than 34 degrees as determined by AASHTO T 236, using a sample of the material compacted to 95 percent of maximum density at optimum moisture content, determined by AASHTO T 99, Method D.
   1. Internal friction angle testing is not required for backfill material that has at least 80 percent of the material retained on the 3/4 inch sieve.

E. Use backfill that:
   1. Is substantially free of shale or other soft particles of poor durability.
   2. Has a sodium sulfate soundness loss of less than 15 percent after 5 cycles, determined in accordance with AASHTO T 104.
   3. Has an organic content less than one-half of one percent as determined by AASHTO T 267 on the portion of the material finer than the No. 10 sieve.

F. Meet electrochemical properties specified in Table 2

2.2 FREE DRAINING GRANULAR BACKFILL

A. Place Free Draining Granular Backfill along the wall face in accordance with this Section. Refer to Section 02056 for Free Draining Granular Backfill gradation requirements. For geogrid reinforcement applications, use a maximum particle size of 3/4 inch.

B. Meet electrochemical properties specified in Table 2.

TABLE 2

Electrochemical Requirements			
Property	**Metallic Reinforcement**	**Geogrid Reinforcement**	**Test Method**
Resistivity	Minimum 3000 ohm-cm, at 100% saturation*	N/A	AASHTO T 288
pH	6.0 – 10.0	5.5 – 10.0**	AASHTO T 289
Chlorides	Maximum 100 ppm	N/A	AASHTO T 291
Sulfates	Maximum 200 ppm	N/A	AASHTO T 290

*Do not follow Note 6 of AASHTO T 288 to find lowest possible resistivity (where soil is in a slurry state). Only saturate soil to 100% saturation, where a sheen of water is seen at the top surface of the sample in the soil box.
**Maximum value for polyester geogrid is 9.0; and for values between 8.0 and 9.0, or when saturated conditions are anticipated, use an RF_D value of 1.3.

PART 3 EXECUTION

3.1 INSTALLATION

A. Excavation and Foundation Preparation:
   1. Excavate and grade foundation area to the lines and grades shown on the drawings, or as directed by the Engineer.
   2. Make the width of excavation equal to or exceeding the length of soil reinforcing elements.
   3. Compact the foundation using at least three passes of a lightweight, steel, smooth-drum vibratory roller, or as otherwise determined by the Engineer before the wall construction.
   4. Remove unsuitable foundation soils and replace with Select Backfill, or with other suitable material determined by the Engineer, placed and compacted as specified in this article.

B. MSE Wall:

1. Follow erection of each course of panel/modular block with placement of Select Backfill.
    a. Complete backfill at the front of the wall before backfilling more than 4 feet above the bottom of the lowermost facing element.
2. Do not damage or disturb wall materials or misalign facing panels/modular blocks during backfill placement.
3. Remove and replace or correct, as directed by the Engineer, wall materials damaged or disturbed during backfill placement at no cost to the Department.
4. Remove and replace or correct, as directed by the Engineer, Select Backfill not meeting the specified requirements at no cost to the Department.
5. Make the moisture content of the Select Backfill during placement and compaction uniform throughout each layer.
6. Determine the optimum moisture content in accordance with AASHTO T 99, Method D.
7. Place Select Backfill with the moisture not greater than the optimum moisture content, nor less than four percentage points below optimum.
8. Remove any Select Backfill with placement moisture content in excess of the optimum moisture content.
    a. Select Backfill may be reused, provided it is aerated or otherwise reworked until the moisture content is uniform and acceptable throughout the entire lift.
9. Do not exceed 12 inches (loose) in lift thickness.
    a. Decrease the lift thickness as necessary to obtain the specified density.
    b. Place backfill in uniformly thick layers.
10. Compact backfill to at least 95 percent of the maximum density, AASHTO T 99, Method D.
11. When placing backfill over the soil reinforcement, begin placement 3 to 5 feet from the wall face and proceed away from the wall to prevent the reinforcement from bunching towards the wall face.
12. Operate all placement and compaction equipment parallel to the wall face.
13. Place and compact each layer of backfill in a level manner before placing subsequent backfill layers.
14. Rubber-tired equipment may pass over the reinforcement only at slow speeds (less than 5 mph). Avoid sudden braking and sharp turning.
15. Do not use sheeps-foot or other grid-type rollers for compacting backfill within the limits of the soil reinforcement.
16. During the initial stage of wall construction, to avoid pushing the facing elements out of alignment, do not place or compact backfill against the facing elements until the first layer of soil reinforcement

has been installed and one lift of Select Backfill has been placed and compacted over the reinforcement layer.

17. For all subsequent layers of backfill, before placement of the reinforcement, place and compact the backfill to an elevation 2 inches above the reinforcement connection from a point approximately 18 inches behind the back face of the wall facings (panels, modular blocks) to the end of the reinforcing, unless otherwise shown on the plans at specific locations.
18. Achieve compaction within 4 to 5 feet of the back face of the wall facing units and within 2 feet of any obstructions ("light equipment zone"), by at least three passes of a suitable lightweight or medium-weight (hand-held or hand-guided) mechanical roller, tamper, or vibratory compactor.
    a. When compacting a thin leveling lift along the reinforcement connections level, use compaction equipment with a static weight of less than 800 pounds within this zone.
    b. Use a maximum lift thickness within this zone as warranted by the type of compaction equipment actually used.
    c. Compact within this lighter equipment zone to within at least 3 inches of the facing elements.
    d. Exercise care in the compaction process to avoid misalignment of the facing elements.
19. Place Free Draining Granular Backfill within a zone behind the wall extending at least 30 inches from the front face of the wall facings (but at least 12 inches in width measured from the bottom of each backfill lift), and at least 24 inches in width behind the first-stage wire/grid facing of 2-stage wall systems and behind the wire/grid facing of internal phased-construction walls.
    a. Place and compact Free Draining Granular Backfill as specified above for the lighter equipment zone.
20. Use backfill placement and compaction methods to assure that no voids are present beneath the soil reinforcement elements before backfilling over the reinforcement.
21. Place soil reinforcing elements normal to face of wall in plan view.
    a. If necessary, skew elements (minimizing skew angle) to avoid obstructions, but no more than 15 degrees unless approved by the Wall Company.
22. At the end of each day's operation, slope the backfill away from the wall to direct runoff of rainwater away from the wall face.
    a. Do not allow surface runoff from adjacent areas or groundwater to enter the wall construction site, including at the front face of the wall.
23. Place the top level of soil reinforcement parallel to the top of the facing unit a distance below the top of the wall as shown on the plans.

a. Place the top level of soil reinforcement at least 3 inches below the bottom of the barrier slab lip or the bottom of the concrete gutter behind the coping.

24. Gradually deflect the upper reinforcement elements downward to avoid conflicts with paving and subgrade preparation.
    a. Pay particular attention to special conditions such as where roadway super-elevation is anticipated.
    b. Maximum deflection of the reinforcement elements is 8 inches or as otherwise noted on the plans.
25. Slope the top of the backfill along the wall such that the top reinforcement layer is covered with at least 16 inches of Select Backfill.

END OF SECTION

August 11, 2016

SPECIAL PROVISION

PROJECT # S-I15-1(113)5
PIN # 12780

SECTION 02833S

MSE WALLS USING CONCRETE FACING PANELS AND METAL REINFORCING ELEMENTS

Add Section 02833:

PART 1 GENERAL

1.1 SECTION INCLUDES

A. Materials and construction requirements for mechanically stabilized earth (MSE) walls using a wall system (refer to Section 02831S) approved by the Engineer using concrete facing panels and metal reinforcing elements.

B. Provide and install face panels, reinforcing steel, tie strips, fasteners, joint filler, select backfill, and all necessary attachments from the selected Wall Company.

1.2 RELATED SECTIONS

A. Section 02831S: Retaining Wall-Alternate Systems

B. Section 02832S: Select Backfill for MSE Walls

C. Section 03055: Portland Cement Concrete

D. Section 03211: Reinforcing Steel and Welded Wire

E. Section 03310: Structural Concrete

F. Section 03390: Concrete Curing

G. Section 03924: Structural Concrete Repair and Sealing

1.3 REFERENCES

A. AASHTO M 111: Zinc (Hot-Dip Galvanized) Coatings on Iron and Steel Products

B: AASHTO M 232: Zinc Coating (Hot-Dip) on Iron and Steel Hardware

C. ASTM A 325: Structural Bolts, Steel, Heat Treated, 120/105 ksi Minimum Tensile Strength

D. ASTM A 572: High-Strength Low-Alloy Columbium-Vanadium Structural Steel

E. ASTM A 709M: Structural Steel for Bridges

F. ASTM A 1011: Standard Steel, Sheet and Strip, Hot-Rolled, Carbon, Structural, High-Strength Low-Alloy, High-Strength Low-Alloy with Improved Formability, and Ultra-High Strength

G. UDOT Quality Management Plans

1.4 SUBMITTALS

A. Submit sample of the texture of the panel face for the Engineer's approval.

B. Provide submittals in accordance with Section 02831S and working drawings including design details which protect the reinforcement connections from corrosion.

C. Do not start work on any wall until working drawings have been reviewed and accepted by the Engineer.
   1. Review and acceptance of the drawings does not relieve the Contractor of any responsibility under the contract for the successful completion of the work.

D. Certificate of compliance for incorporated materials along with copies of results of any tests performed.

E. Wall Company's construction manual for the specific wall system.

F. Certification from the Wall Company that the completed wall(s) meet all Department and Wall Company specifications/requirements for the specific wall system.
   1. Where the Department's and the Wall Company's specifications or requirements differ, apply the stricter of the two.

1.5 ACCEPTANCE

A. Panel Acceptance
   1. Meet 28-day minimum compressive strength of 4000 psi.

2. Do not transport panels to the site before seven days after fabrication and until:
    a. A minimum 28-day compressive strength of 4000 psi has been achieved, or
    b. A minimum compressive strength of 3000 psi has been achieved at 14 days.
3. All panels to be visually free of defects and will be rejected if they:
    a. Do not meet the above requirements.
    b. Contain defects due to imperfect molding.
    c. Have any honeycomb.
    d. Have open texture on front face.
    e. Have cracks or spalls that exceed the limits specified in article 3.4

PART 2 PRODUCTS

2.1 PRECAST CONCRETE WALL PANELS

A. Obtain approval from the Engineer for the architectural treatment for all MSE panel walls.

B. Concrete. Class AA(AE) per Section 03055 and Section 03310, having a minimum 28-day compressive strength of 4000 psi.

C. Reinforcing steel to have a minimum cover of 2.0 inches.

D. Casting
1. Use only a UDOT qualified supplier for precast concrete panel fabrication in accordance with UDOT Precast/Prestressed Concrete Structures Quality Management Plan.
    a. Do not cast panels on site.
2. Cast panels on a flat area or approved architectural treatment, with the front face down.
    a. Set tie strip guides at back face.
3. Place concrete in each unit without interruption.
    a. Vibrate with approved equipment to prevent stone pockets or cleavage planes.
    b. Use clean, unused form oil.

E. Reinforcement Connections
1. Cast at least two soil reinforcement connection levels into all full-size concrete panels.
    a. Where only two connection levels are cast in panels, locate the levels in two different horizontal planes separated by at least one-third the panel height.

F. Curing
   1. Keep surfaces wet and moist until the curing compound is applied.
   2. Complete all patching or surface finishing before applying compound.
   3. Spray the entire surface of the concrete with a membrane curing compound. Apply the curing compound at a uniform rate of 1.25 oz/ft^2.
   4. Immediately re-spray any membrane damage which occurs during the curing period.
   5. Leave forms in place until they can be removed without damage to the unit.

G. Concrete Finish
   1. Provide a Class 1 finish for front face of panels.
      a. The thickness of the architectural treatment is in addition to the required design thickness.
   2. Provide a uniform surface finish for the back face of panels.
      a. Roughly screen the finish to eliminate open pockets of aggregate and surface distortions in excess of 1/4 inch.

H. Tolerances
   1. All dimensions ± 1/8 inch.
   2. Angular distortion with regard to the height of panel not to exceed 3/16 inch in 5 feet.
   3. Surface defects on form surfaces not more than 1/8 inch in 5 feet.

I. Marking
   1. Mark the date of manufacture and panel-type designation on the rear of each panel so that it is legible during installation.

2.2 REINFORCING STEEL

A. Epoxy coated in accordance with Section 03211.

2.3 LEVELING PAD CONCRETE

A. Class A or Class B concrete mixes in accordance with Section 03055.

2.4 REINFORCING ELEMENTS

A. Hot rolled from steel bars, galvanize coated 3.4 mils thick, meeting minimum requirements of ASTM A 572, Grade 65; AASHTO M 111.

B. All reinforcing strips to be the specified size and free from defects.

2.5 REINFORCED WELDED WIRE MESH AND LOOP INBEDS

A. Meet minimum requirements of Section 03211 with galvanized coating at least 3.4 mils thick.

2.6 TIE STRIPS

A. Shop fabricated, hot rolled steel conforming to minimum requirements of ASTM A 709M, Grade 345; AASHTO M 111; and ASTM A 1011 Grade 345 or equivalent, galvanize coated at least 3.4 mils thick.

2.7 PANEL FASTENERS

A. Bolts and nuts to be hexagonal cap screw and galvanize coated, meeting minimum requirements of ASTM A 325 and AASHTO M 232.

2.8 OTHER FASTENERS

A. Fasteners to wingwalls and abutment walls, if required, to be provided by the Wall Company.

2.9 DAMAGED GALVANIZATION

A. Spray with zinc paint, covering the entire area that has been damaged, as an alternative to replacement of any reinforcing steel, reinforcing strips, wire mesh or fasteners that have damaged galvanization.

2.10 CURING COMPOUND

A. Refer to Section 03390

2.11 GEOTEXTILE

A. Cover horizontal and vertical joints between panels, when required, by a geotextile of type and grade recommended by the Wall Company.

2.12 ADHESIVE

A. Per Wall Company's standard.

2.13 BEARING PADS

A. Horizontal rubber bearing pads to be of the type and grade recommended and supplied by the Wall Company.

2.14 LIFTING DEVICES

A. Per Wall Company's standard.

2.15 SELECT BACKFILL

A. Refer to Section 02832S.

2.16 MATERIALS FOR CRACK AND SPALL REPAIR

A. Refer to Section 03924.

PART 3 EXECUTION

3.1 GENERAL

A. Arrange for a qualified representative (minimum five years experience with MSE wall design and construction) from the selected Wall Company to be directly involved and provide technical assistance during all phases of construction of the wall(s).

1. The Wall Company representative is to be at the project site for at least the first five working days of wall construction and until all aspects of wall construction have been satisfactorily demonstrated to the MSE Wall Company representative and the Engineer. The MSE Wall Company representative is to subsequently visit the site at least once every 10,000 sq. ft. of wall face construction, or as otherwise determined by the Engineer.
2. The Wall Company representative is responsible for training the Contractor's wall construction crew(s) and Department inspectors in proper quality control for construction of the walls.
   a. If one or more construction crew members change, the Wall Company representative is responsible to train the new crew member(s).
3. During each site visit, the representative is to meet with the Engineer near the conclusion of the visit to report on the observed wall construction procedures, including providing a copy of the field report.

B. Provide the Wall Company's construction manual to the Engineer, and assure that the wall system-specific requirements in the manual are integrated into the wall construction.

C. Provide a final field observations report from the Wall Company that specifically addresses that the completed wall(s) meet all Department and

Wall Company specifications/requirements and what deficiencies exist, if any.

1. Where the Department's and the Wall Company's specifications/requirements differ, apply the stricter of the two requirements.

D. Haul, store, and ship wall materials so as to minimize the potential of producing any type of defects.

1. Store panels to avoid damage to connection pieces, such that the tie strips do not bend.

E. Perform excavation and foundation preparation (including removal of unsuitable soils) as specified in Section 02832S.

F. Construct wall system in accordance with the approved plans, specifications, and the Wall Company's recommendations and construction manual.

3.2 LEVELING PAD

A. Prepare the subgrade soils and/or fill so as to cast the leveling pad to the design elevations shown on the drawings and to ensure complete contact of the retaining wall units with the base.

B. Furnish and place concrete in accordance with Section 03055.

C. Place cast-in-place concrete leveling pad upon undisturbed in-situ soils, or upon properly placed and compacted fill as per Section 02832S. If shown on the Wall Company's approved drawings, a maximum 3-inch wide gap may be left between the end of the leveling pad and the adjacent higher panel where the wall steps up. If such is the case, 1) ensure the entire pad is poured on firm compacted fill or undisturbed subgrade soils, 2) provide that the MSE backfill in the zone behind the gap is fully retained, and 3) the gap is properly backfilled before the remaining backfill in front of the wall face is placed. Place leveling pad to a thickness of at least 6 inches.

D. Allow leveling pad to cure for at least 12 hours before placing concrete panels.

3.3 WALL CONSTRUCTION

A. Place wall backfill and reinforcement as specified in Section 02832S.

B. Handle panels by means of lifting device set into upper edge or side of the panels and set in position vertically.

C. Place panels on successive horizontal lifts in the sequence shown on the approved plans as backfill placement proceeds.

D. Place panels initially at a slight batter towards the backfill as recommended by the Wall Company to compensate for outward rotation of the panel consequent upon fill placement and compaction.

E. Place bearing pads as required by the Wall Company to prevent concrete-to-concrete contact between panels.

F. Use rubber, wood, or metal shims as necessary to make final adjustments to the wall panel to facilitate level placement of the panel.
   1. Do not leave wood shims at any location.

G. Where reinforcement is obstructed by elements such as piles, drilled shafts, guardrail posts, catch basins, drop inlets, culverts, etc. in the wall soil reinforcement zone, modify the reinforcement design using one of the following alternatives:
   1. If the reinforcement is modified, design the surrounding reinforcement layers to carry the additional load.
   2. Place a structural frame around the obstruction which is capable of transferring loads from the reinforcements on one side of the obstruction to reinforcements on the other side of the obstruction.
   3. If the soil reinforcement consists of discrete strips or bar mats rather than continuous sheets, splay the reinforcement around the obstruction.

E. Place soil reinforcement strips normal to the face of the wall in plan view.
   1. Where required to splay the reinforcement around obstructions, skew the reinforcement (minimizing the skew angle to no more than 15 degrees).
      a. Maintain a set-back for reinforcement of at least 2 inches from piles or other metallic obstructions.
      b. Do not exceed horizontal spacing between longitudinal reinforcing of 7 feet.

F. Where reinforcement elements are to be connected using bolts and nuts, use a crescent or socket-head ratchet wrench to securely hand-tighten the nut.
   1. Do not use pneumatic equipment.

G. Wall panel horizontal alignment tolerance is 0.7 percent (for example 2.5 inches in 30 feet). Vertical tolerance is 0.7 percent (for example 0.85 inches in 10 feet). The overall vertical tolerance of the wall (plumbness from top to bottom) not to exceed 0.5 percent (for example 1.2 inches in

20 feet of wall height). Wall panel levelness tolerance not to exceed 0.5 percent (for example 1.2 inches in 20 feet).

H. Install panels so that joints are uniform. The maximum allowable offset in any panel joint is 0.40 inch. Joint width is 1.2 inches maximum and 0.50 inch minimum.

I. Check panel tolerance and reset before placement of the next panel if out of tolerance.

J. Place and compact required backfill in front of base wall panel before the third tier of panels are placed, or within 14 calendar days, whichever comes first.

3.4 CRACK AND SPALL REPAIR CRITERIA FOR CONCRETE PANELS

A. A fully penetrating crack is defined as a crack extending through the cross-section of the precast panel from the front face to the back face of the unit.

B. Cracks at Front Face of Panel:
   1. Panels with one or two partially penetrating cracks with widths less than or equal to 12 mils are acceptable.
   2. Reject panels with fully penetrating cracks, or cracks wider than 12 mils.
   3. No more than two cracks per individual panel are allowed without further evaluation.

C. Cracks at Back Face of Panel:
   1. Partially penetrating cracks with widths less than or equal to 12 mils are acceptable.
   2. Partially penetrating cracks with widths between 12 mils and 30 mils are acceptable when repaired with surface sealant according to subparagraph F, Crack Repair Procedures.
   3. Evaluate partially penetrating cracks wider than 30 mils for acceptance with epoxy injection according to subparagraph F, Crack Repair Procedures.
   4. No more than two repairable cracks per individual panel are allowed without further evaluation.

D. Spalls at Front Face of Panel:
   1. Spalls with widths less than 4.0 inches and depths less than 2.0 inches may be repaired with a patching material acceptable to the Engineer of the same color as panel concrete. Resultant repair to be approved by the Engineer.

2. Reject panels with spalls wider than 4.0 inches or deeper than 2.0 inches.
3. Measure spall depth from the structural thickness of the panel excluding architectural surface finish.
4. Panels with more than two spalls are subject to further evaluation before acceptance.

E. Spalls at Back Face of Panel:
1. Spalls with widths less than 4.0 inches and depths less than 2.0 inches may be repaired with a patching material acceptable to the Engineer. Resultant repair to be approved by the Engineer.
2. Reject panels with spalls wider than 4.0 inches or deeper than 2.0 inches.
3. Panels with more than four spalls are subject to further evaluation before acceptance.

F. Crack Repair Procedures:
1. Surface Sealing: Prepare surface and apply a sealant acceptable to the Engineer according to Manufacturer's instructions.
2. Epoxy Injection: Prepare surface and inject cracks with Department-approved product according to Manufacturer's instructions.

G. Spall Repair Procedures:
1. Prepare surface and apply patching material according to Manufacturer's instructions, and as acceptable to the Engineer.

END OF SECTION

August 11, 2016

SPECIAL PROVISION

PROJECT # S-I15-1(113)5
PIN # 12780

SECTION 02834S

MSE WALLS USING CONCRETE FACING PANELS AND GEOGRID REINFORCING ELEMENTS

Add Section 02834:

PART 1 GENERAL

1.1 SECTION INCLUDES

A. Materials and construction requirements for mechanically stabilized earth (MSE) walls using a wall system (see Section 02831S) approved by the Engineer using concrete facing panels and geogrid reinforcing elements.

B. Provide and install face panels, reinforcing steel, geogrid, fasteners, joint filler, select backfill, and all necessary attachments from the selected Wall Company.

1.2 RELATED SECTIONS

A. Section 02831S: Retaining Wall -Alternate Systems

B. Section 02832S: Select Backfill for MSE Walls

C. Section 03055: Portland Cement Concrete

D. Section 03211: Reinforcing Steel and Welded Wire

E. Section 03310: Structural Concrete

F. Section 03390: Concrete Curing

G. Section 03924: Structural Concrete Repair and Sealing

1.3 REFERENCES

A. AASHTO M 32: Steel Wire, Plain, for Concrete Reinforcement

B. AASHTO M 55: Steel Welded Wire Reinforcement, Plain, for Concrete

C. AASHTO M 111: Zinc (Hot-Dip Galvanized) Coatings on Iron and Steel Products

D. AASHTO M 232: Zinc Coating (Hot-Dip) on Iron and Steel Hardware

E. ASTM D 5262: Standard Test Method for Evaluating the Unconfined Tension Creep and Creep Rupture Behavior of Geosynthetics

F. ASTM D 6637: Standard Test Method for Determining Tensile Properties of Geogrids by the Single or Multi-Rib Tensile Method

G. UDOT Quality Management Plans

1.4 SUBMITTALS

A. Submit sample of the texture of the panel face for the Engineer's approval.

B. Provide submittals in accordance Section 02831S and working drawings including all design details.

C. Do not start work on any wall until working drawings have been reviewed and accepted by the Engineer.
   1. Review and acceptance of the drawings does not relieve the Contractor of any responsibility under the contract for the successful completion of the work.

D. Certificate of Compliance for incorporated materials along with copies of results of any tests performed.

E. Wall Company's construction manual for the specific wall system.

F. Certification from the Wall Company that the completed wall(s) meet all Department and Wall Company specifications/requirements for the specific wall system.
   1. Where the Department's and the Wall Company's specifications or requirements differ, apply the stricter of the two.

1.5 ACCEPTANCE

A. Panel Acceptance
   1. Meet 28-day minimum compressive strength of 4000 psi.
   2. Do not transport panels to the site before seven days after fabrication and until:

a. A minimum 28-day compressive strength of 4000 psi has been achieved, or
b. A minimum compressive strength of 3000 psi has been achieved at 14 days.

3. All panels to be visually free of defects and will be rejected if they:
   a. Do not meet the above requirements
   b. Contain defects due to imperfect molding
   c. Have any honeycomb
   d. Have open texture on front face
   e. Have cracks or spalls that exceed the limits specified in article 3.5

PART 2 PRODUCTS

2.1 PRECAST CONCRETE WALL PANELS

A. Obtain approval from the Engineer for the architectural treatment for all MSE panel walls.

B. Concrete. Class AA(AE) per Section 03055 and Section 03310, having a minimum 28-day compressive strength of 4000 psi.

C. Reinforcing steel to have a minimum cover of 2.0 inches.

D. Casting
1. Use only a UDOT-qualified supplier for precast concrete panel fabrication in accordance with UDOT Precast/Prestressed Concrete Structures Quality Management Plan
   a. Do not cast panels on site.
2. Cast panels on a flat area or approved architectural treatment, with the front face down.
   a. Set tie strip guides at back face.
3. Place concrete in each unit without interruption.
   a. Vibrate with approved equipment to prevent stone pockets or cleavage planes.
   b. Use clean, unused form oil.

E. Reinforcement Connections
1. Cast at least two soil reinforcement connection levels into all full-size panels.
   a. Where only two connection levels are cast in panels, locate the levels in two different horizontal planes separated by at least one-third the panel height.

F. Curing
   1. Keep surfaces wet and moist until the curing compound is applied.
   2. Complete all patching or surface finishing before applying compound.
   3. Spray the entire surface of the concrete with a membrane curing compound. Apply the compound at a uniform rate of 1.25 oz/ft^2 of area.
   4. Immediately re-spray any membrane damage which occurs during the curing period.
   5. Leave forms in place until they can be removed without damage to the unit.

G. Concrete Finish
   1. Provide a Class 1 finish for front face of panels.
      a. The thickness of the architectural treatment is in addition to required design thickness.
   2. Provide a uniform surface finish for the back face of panels.
      a. Roughly screen the finish to eliminate open pockets of aggregate and surface distortion in excess of 1/4 inch.

H. Tolerances
   1. All dimensions ± 1/8 inch.
   2. Angular distortion with regard to the height of panel not to exceed 3/16 inch in 5 feet.
   3. Surface defects on form surfaces not more than 1/8 inch in 5 feet.

I. Marking
   1. Mark the date of manufacture and panel type designation on the rear side of each panel so that it is legible during installation.

2.2 REINFORCING STEEL

A. Epoxy coated in accordance with Section 03211.

2.3 LEVELING PAD CONCRETE

A. Use Class A or Class B concrete mixes in accordance with Section 03055.

2.4 GEOGRID

A. Use geogrid consisting of a regular grid network of integrally connected, discontinuous, select high-density polyethylene or polypropylene resin polymer tensile elements.
   1. Aperture geometry sufficient to permit significant mechanical interlock with the surrounding soil and/or rock.

2. Structure to be dimensionally stable and be able to retain its geometry under manufacture, transport, and installation.

B. Provide creep rupture test for 75-year design life per ASTM D5262.

C. Provide ultimate strength, minimum per ASTM D6637 and utilize geogrid reinforcement reduction factors as appropriate for the Project.

D. Carefully inspect all soil reinforcement and attachment devices to ensure they are true to size and free from defects.

E. Prevent mud, wet concrete, epoxy, and other contaminants from coming in contact with and affixing to the soil reinforcement and inserts, that would interfere with the geogrid connections.

F. Store soil reinforcement products as recommended by the Wall Company.

2.5 REINFORCED WELDED WIRE MESH AND LOOP INBEDS

A. Meet minimum requirements of Section 03211 with galvanized coating at least 3.4 mils thick.

2.6 PANEL FASTENERS

A. Bolts and nuts to be hexagonal cap screw and galvanize coated, meeting minimum requirements of ASTM A-325 and AASHTO M 232.

2.7 OTHER FASTENERS

A. Fasteners to wingwalls and abutment walls, if required, to be provided by the Wall Company.

2.8 CURING COMPOUND

A. Refer to Section 03390.

2.9 GEOTEXTILE

A. Cover horizontal and vertical joints between panels, when required, by a geotextile of the type and grade recommended by the Wall Company.

2.10 ADHESIVE

A. Per Wall Company's standard.

2.11 LIFTING DEVICES

A. Per Wall Company’s standard.

2.12 BEARING PADS

A. Horizontal rubber bearing pads to be of the type and grade recommended and supplied by the Wall Company.

2.13 SELECT BACKFILL

A. Refer to Section 02832S.

2.14 MATERIALS FOR CRACK AND SPALL REPAIR

A. Refer to Section 03924.

PART 3 EXECUTION

3.1 GENERAL

A. Arrange for a qualified representative (minimum five years experience with MSE wall design and construction) from the selected Wall Company to be directly involved and provide technical assistance during all phases of construction of the wall(s).

1. The Wall Company representative is to be at the project site for at least the first five working days of wall construction and until all aspects of wall construction have been satisfactorily demonstrated to the MSE Wall Company representative and the Engineer. The MSE Wall Company representative is to subsequently visit the site at least once every 10,000 sq. ft. of wall face construction, or as otherwise determined by the Engineer.
2. The Wall Company representative is responsible for training the Contractor’s wall construction crew(s) and Department inspectors in proper quality control for construction of the walls.
   a. If one or more construction crew members change, the Wall Company representative is responsible to train the new crew member(s).

3. During each site visit, the representative is to meet with the Engineer near the conclusion of the visit to report on the observed wall construction procedures, including providing a copy of the field report.

B. Provide the Wall Company's construction manual to the Engineer, and assure that the wall system-specific requirements in the manual are integrated into the wall construction.

C. Provide a final field observations report from the Wall Company that specifically addresses that the completed wall(s) meet all Department and Wall Company specifications/requirements and what deficiencies exist, if any.
   1. Where the Department's and the Wall Company's specifications/requirements differ, apply the stricter of the two requirements.

D. Haul, store, and ship wall materials so as to minimize the potential of producing any type of defects.
   1. Store panels to avoid damage to connection pieces, such that the tie strips do not bend.

E. Perform excavation and foundation preparation (including removal of unsuitable soils) as specified in Section 02832S.

F. Construct wall system in accordance with the approved plans, specifications, and the Wall Company's recommendations and construction manual.

3.2 LEVELING PAD

A. Prepare the subgrade soils and/or fill so as to cast the leveling pad to the design elevations shown on the drawings and to ensure complete contact of the retaining wall units with the base.

B. Furnish and place concrete in accordance with Section 03055.

C. Place cast-in-place concrete leveling pad upon undisturbed in-situ soils, or upon properly placed and compacted fill as per Section 02832S. If shown on the Wall Company's approved drawings, a maximum 3-inch wide gap may be left between the end of the leveling pad and the adjacent higher panel where the wall steps up. If such is the case, 1) ensure the entire pad is poured on firm compacted fill or undisturbed subgrade soils, 2) provide that the MSE backfill in the zone behind the gap is fully retained, and 3) the gap is properly backfilled before the remaining backfill in front of the wall face is placed. Place leveling pad to a thickness of at least 6 inches.

D. Allow leveling pad to cure for at least 12 hours before placing concrete panels.

3.3 GEOGRID INSTALLATION

A. Verify the correct orientation (roll direction) of the geogrid.

B. Place geogrid horizontally on the compacted backfill at the proper design.

C. Connect geogrid to the concrete wall units as specified by the Wall Company.

D. Pull the geogrid taut to eliminate loose folds and remove slack in the geogrid at the wall unit connections, pretension the geogrid, and stake or otherwise secure the back edge of the geogrid before and during backfill and compaction.

E. Follow the Wall Company's overlap requirements for uniaxial and biaxial geogrids.

F. Where reinforcement is obstructed by elements such as piles, drilled shafts, guardrail posts, catch basins, drop inlets, culverts, etc. in the wall soil reinforcement zone, modify the reinforcement design using one of the following alternatives:
   1. If the reinforcement is modified, design the surrounding reinforcement layers to carry the additional load.
   2. Place a structural frame around the obstruction which is capable of transferring loads from the reinforcements on one side of the obstruction to reinforcements on the other side of the obstruction.
   3. If the soil reinforcement consists of discrete strips or bar mats rather than continuous sheets, splay the reinforcement around the obstruction.

3.4 WALL CONSTRUCTION

A. Place wall backfill and reinforcement as specified in Section 02832S.

B. Handle panels by means of lifting device set into upper edge or side of the panels and set in position vertically.

C. Place panels on successive horizontal lifts in the sequence shown on the approved plans as backfill placement proceeds.

D. Place panels initially at a slight batter towards the backfill as recommended by the Wall Company to compensate for outward rotation of the panel consequent upon fill placement and compaction.

E. Place bearing pads as required by the Wall Company to prevent concrete-to-concrete contact between panels.

F. Use rubber, wood, or metal shims as necessary to make final adjustments to the wall panel to facilitate lever placement of the panel.
   1. Do not leave wood shims at any location.

G. Wall panel horizontal alignment tolerance is 0.7 percent (for example 2.5 inches in 30 feet). Vertical tolerance is 0.7 percent (for example 0.85 inches in 10 feet). The overall vertical tolerance of the wall (plumbness from top to bottom) not to exceed 0.5 percent (for example 1.2 inches in 20 feet of wall height). Wall panel levelness tolerance not to exceed 0.5 percent (for example 1.2 inches in 20 feet).

H. Install panels so that joints are uniform. The maximum allowable offset in any panel joint is 0.40 inch. Joint width is 1.2 inches maximum and 0.50 inch minimum.

I. Check panel tolerance and reset before placement of the next panel if out of tolerance.

3.5 CRACK AND SPALL REPAIR CRITERIA FOR CONCRETE PANELS

A. A fully penetrating crack is defined as a crack extending through the cross-section of the precast panel from the front face to the back face of the unit.

B. Cracks at Front Face of Panel:
   1. Panels with one or two partially penetrating cracks with widths less than or equal to 12 mils are acceptable.
   2. Reject panels with fully penetrating cracks, or cracks wider than 12 mils.
   3. No more than two cracks per individual panel are allowed without further evaluation.

C. Cracks at Back Face of Panel:
   1. Partially penetrating cracks with widths less than or equal to 12 mils are acceptable.
   2. Partially penetrating cracks with widths between 12 mils and 30 mils are acceptable when repaired with surface sealant according to subparagraph F, Crack Repair Procedures.

3. Evaluate partially penetrating cracks wider than 30 mils for acceptance with epoxy injection according to subparagraph F, Crack Repair Procedures.
4. No more than two repairable cracks per individual panel are allowed without further evaluation.

D. Spalls at Front Face of Panel:
1. Spalls with widths less than 4.0 inches and depths less than 2.0 inches may be repaired with an approved patching material of the same color as panel concrete. Resultant repair to be approved by the Engineer.
2. Reject panels with spalls wider than 4.0 inches or deeper than 2.0 inches.
3. Measure spall depth from the structural thickness of the panel excluding architectural surface finish.
4. Panels with more than two spalls are subject to further evaluation before acceptance.

E. Spalls at Back Face of Panel:
1. Spalls with widths less than 4.0 inches and depths less than 2.0 inches may be repaired with a patching material acceptable to the Engineer. Resultant repair to be approved by the Engineer.
2. Reject panels with spalls wider than 4.0 inches or deeper than 2.0 inches.
3. Panels with more than four spalls are subject to further evaluation before acceptance.

F. Crack Repair Procedures:
1. Surface Sealing: Prepare surface and apply a sealant acceptable to the Engineer according to Manufacturer's instructions.
2. Epoxy Injection: Prepare surface and inject cracks in accordance with Section 03924.

G. Spall Repair Procedures:
1. Prepare surface and apply patching material according to Manufacturer's instructions, and as acceptable to the Engineer.

END OF SECTION

August 11, 2016

SPECIAL PROVISION

PROJECT # S-I15-1(113)5
PIN # 12780

SECTION 02839S

PREFABRICATED MODULAR GRAVITY WALL (PMGW) SYSTEMS USING LARGE MODULAR BLOCK UNITS

Add Section 02839:

PART 1 GENERAL

1.1 SECTION INCLUDES

A. Materials and construction requirements for PMGW walls using option K or L as specified in Section 02831S.

B. Provide and install the prefabricated modular gravity block wall units and all necessary appurtenances from the selected Wall Company.

1.2 RELATED SECTIONS

A. Section 02056: Embankment, Borrow, and Backfill

B. Section 02317: Structural Excavation

C. Section 02831S: Retaining Wall - Alternate Systems

D. Section 03055: Portland Cement Concrete

E. Section 03310: Structural Concrete

1.3 REFERENCES

A. ASTM C140: Sampling and Testing Concrete Masonry Units and Related Units

B. ASTM C331: Lightweight Aggregates for Concrete Masonry Units

C. ASTM D412: Vulcanized Rubber and Thermoplastic Elastomers-Tension

D. ASTM D1248: Polyethylene Plastics Extrusion Materials For Wire and Cable

E. ASTM D3034: Type PSM Poly (Vinyl Chloride) (PVC) Sewer Pipe and Fittings

F. American Association of State Highway and Transportation Officials (AASHTO) LRFD Bridge Design Specifications

G. National Concrete Masonry Association (NCMA):
   1. NCMA SRWU-1 Test Method for Determining Connection Strength of SRW
   2. NCMA SRWU-2 Test Method for Determining Shear Strength of SRW

1.4 SUBMITTALS

A. Submit sample of the texture for the Engineer's approval.

B. Submit for approval at least 3 color samples of proposed segmental concrete unit colors (if integral color is required), matched to colors of local features or as otherwise indicated, at least four weeks before beginning manufacture of the block units.

C. Provide working drawings and other applicable submittals in accordance with Section 02831S.

D. Do not start work on any wall until working drawings have been reviewed and accepted by the Engineer.
   1. Review and acceptance of the drawings does not relieve the Contractor of any responsibility under the contract for the successful completion of the work.

E. Certificate of compliance for incorporated materials along with copies of results of any tests performed.

F. Certification from the Wall Company that the completed wall(s) meet all Department and Wall Company specifications.
   1. Where the Department's and the Wall Company's specifications differ, the stricter of the two apply.

1.5 ACCEPTANCE

A. Prefabricated Modular Gravity Block Units:
   1. Compressive Strength: Minimum 28-day of 4000 psi. Modular gravity block units which meet 75 percent of 28-day strength within 7 days are acceptable for placement in the wall.
      a. Acceptance is determined on a lot basis.
      b. The lot will be randomly sampled in accordance with ASTM Specification C140.
      c. Test specimens will be cored or conform to the saw-cut coupons provisions of ASTM Specification C140, Section 6.2.4.
      d. Block sampling frequency:

TABLE 1

Lot Size	Samples
0-2,000	4 units
Greater than 2,000	1 unit per 1,000

      e. Provide additional samples if requested by the Engineer.
   2. Dimension Tolerances:
      a. Height: +/- 3/16 inch
      b. Width: +/- 1/2 inch unless field cut for fitting purposes.
      c. Depth: No less than the unit design depth of the blocks.
   3. Finish and Appearance:
      a. Modular gravity block units to be sound, free from visual defects, and free from cracks or other defects that interfere with the proper placement of the unit or impair the strength or durability of the construction.
      b. Assure the exposed face or faces of units are free of chips, cracks, or other imperfections when viewed from a distance

of 30 feet under diffused lighting.

c. Acceptance will be at the Engineer's discretion.

d. Up to five percent of a shipment may contain slight cracks or small chips not longer than 1 inch.

4. Block units will be rejected for failure to meet any of the above specified requirements. In addition, units will be rejected for any of the following defects:

a. Defects that indicate imperfect molding

b. Defects indicating honeycomb or open-texture concrete

c. Cracked or severely chipped units

d. Color variation on exposed face(s) of unit

B. Completed Wall Construction Tolerances:

1. Horizontal alignment (including curves and corners) is 0.7 percent (for example 2.5 inches in 30 feet).

2. Adjacent block tolerance is 1 percent (for example 0.4 inches in 3 feet).

3. The overall vertical tolerance of the wall (plumbness from top to bottom) not to exceed 1 percent (for example 0.8 inches in 6 feet of wall height).

4. Level tolerance not to exceed 0.5 percent (for example 1.2 inches in 20 feet).

5. Ensure all joints are uniform. Maximum allowable offset in any block joint is 0.5 inch. Maximum joint width is 0.25 inch.

PART 2 PRODUCTS

2.1 CONCRETE MODULAR BLOCK UNITS

A. Concrete. Class AA(AE) per Section 03055 and Section 03310, having a minimum 28-day compressive strength of at least 4000 psi.

B. Manufacture concrete block using a combination of cement, aggregates, admixtures, and other components meeting the requirements of Section 03055.

1. Verify the compatibility of all components and the environment in which the block will be used, including sulfate soils and/or groundwater.

2. Lightweight aggregates are subject to the Engineer's approval and meet the requirements of ASTM C331.

C. Provide block units having angled sides capable of producing concave

and convex alignment curves with a minimum radius as specified in the Wall Company's layout drawings.

D. Notify the Engineer in writing at least 72 hours before beginning the casting of concrete modular block units.

2.2 ADHESIVE

A. Use a urethane or polyurethane adhesive which is specifically described as forming a bond with concrete and masonry materials. Minimum tensile stress of 225 psi and minimum elongation of 600% (ASTM D412).
   1. Product examples meeting these criteria are Sikabond Construction Adhesive and Geocel 3500.

2.3 DRAINAGE PIPE

A. If required in Construction Drawings, use perforated or slotted PVC drainage pipe manufactured in accordance with ASTM D3034 or corrugated HDPE pipe manufactured in accordance with ASTM D1248.

2.4 SELECT MATERIAL FOR PMGW

A. Use Select Material for PMGW which is free from frozen, organic and otherwise deleterious materials. Conform to the following gradation limits as determined by AASHTO T-27 / ASTM D422:

TABLE 2

Gradation for Select Material for PMGW Walls	
Sieve Size	Percent passing
2 inch	100
¾ inch	75-100
No. 4	0-60
No. 40	0-30
No. 200	0-5

1. Use Select Material for PMGW that:
    a. Is substantially free of shale or other soft, poor durability particles.
    b. Has an organic content less than 1 percent as determined by AASHTO T-267 on the portion of the material finer than the No. 10 sieve.
2. Furnish the Engineer with a copy of all test results performed to meet the requirements of this section of the specification.

PART 3 EXECUTION

3.1 GENERAL

A. Arrange for a qualified representative (minimum five years experience with MSE wall design and construction) from the selected Wall Company to be directly involved and provide technical assistance during all phases of construction of the wall(s).
    1. The Wall Company representative is to be at the project site for at least the first five working days of wall construction and until all aspects of wall construction have been satisfactorily demonstrated to the MSE Wall Company representative and the Engineer. The MSE Wall Company representative is to subsequently visit the site at least once every 10,000 sq. ft. of wall face construction, or as otherwise determined by the Engineer.
    2. The Wall Company representative is responsible for training the Contractor's wall construction crew(s) and Department inspectors in proper quality control for construction of the walls.
        a. If one or more construction crew members change, the Wall Company representative is responsible to train the new crew member(s).
    3. During each site visit, the representative is to meet with the Engineer near the conclusion of the visit to report on the observed wall construction procedures, including providing a copy of the field report.

B. Provide the Wall Company's construction manual to the Engineer, and assure that the wall system-specific requirements in the manual are integrated into the wall construction.

C. Provide a final field observations report from the Wall Company that specifically addresses that the completed wall(s) meet all Department and

Wall Company specifications/requirements and what deficiencies exist, if any.

1. Where the Department's and the Wall Company's specifications/ requirements differ, the stricter of the two requirements applies.

D. Haul, store, and ship wall materials to minimize the potential of producing any type of defects.

E. Perform excavation and foundation preparation (including removal of unsuitable soils) as specified in Section 02317.

F. Construct the wall system in accordance with the approved plans, specifications, and the Wall Company's recommendations and construction manual.

G. Do not place any block until it has been cured for at least 7 days and meets all acceptance criteria.

3.2 LEVELING PAD INSTALLATION

A. Prepare the subgrade soils and/or fill to install the leveling pad to the design elevations shown on the drawings, to ensure complete contact of the retaining wall units with the base so that there are no voids beneath or between units.

1. Remove all foundation soils found to be unsuitable and replace with Select Material for PMGW placed and compacted as described in this Section.

B. Place Select Material for PMGW leveling pad to a thickness of at least 6 inches on undisturbed in-situ soils or on properly placed and compacted fill as per this Section. Provide a level surface on which to place the first course of block units.

C. Width of the leveling pad extends at least 6 inches in front and 6 inches in back of the base unit footprint.

D. Compact leveling pad material in accordance with Section 02056 so as to provide a smooth, hard surface on which to place the first course of units.

3.3 PMGW BLOCK UNIT INSTALLATION

A. Make the width of excavation equal to or exceeding the required backfill.

Refer to the approved plans for backfill dimensions from the back face of the wall.

B. Place the first course of modular block units on the leveling pad. Verify that the wall units are level and properly aligned.

C. Ensure block units are in full contact with the leveling pad.

D. Place unit faces in contact end to end. Do not allow any gaps one-half inch or greater.

E. Follow erection of each course of wall blocks with placement of Select Material for PMGW. Complete backfill at the front of the wall prior to backfilling more than 4 feet above the bottom of the lowermost facing block.
   1. Minimum bury depth of the bottom block is 1.0 feet.
   2. Do not damage, disturb or misalign block units during backfill placement.
   3. Do not exceed individual block height (loose) in lift thickness. Decrease the lift thickness as necessary to obtain the specified density. Place backfill in uniformly thick layers.

F. Ensure each wall course is completely filled, backfilled, and compacted before proceeding to the next wall course.
   1. Compact backfill to at least 95 percent of the maximum density, AASHTO T-99, Method C or D (with oversized correction, outlined in Note 7 of T-99).
   2. Place and compact each layer of backfill in a level manner before placing subsequent backfill layers.

G. Lay each successive course making sure that the bottom recess is in full contact with the unit locators of the course below. Pull unit forward as far as possible.

H. Check and maintain level and wall batter. Do not use shims.

I. Clean the top of each course before setting additional courses.

J. At the end of each day's operation, slope the backfill away from the wall to direct runoff of rainwater away from the wall face. Do not allow surface runoff from adjacent areas to enter the wall construction site.

3.4 WALL CAP INSTALLATION

A. Provide a permanent connection between the wall cap and the top course of the wall units. Construct according to the Wall Company's drawings and specifications.
   1. Use a urethane or polyurethane adhesive which is specifically described as forming an excellent bond with concrete and masonry materials.
      a. Minimum tensile stress of 225 psi (ASTM D412).
      b. Minimum elongation of 600% (ASTM D412).

B. Clean and apply exterior concrete cap adhesive to top course of wall units before placement of cap unit.

C. Trim sides of interior cap units to insure proper fit of wall cap. Do not leave cut surfaces exposed to view in the finished wall.

D. Fill and compact soil to finished grade.

END OF SECTION

August 9, 2016

SPECIAL PROVISION

PROJECT # S-I15-1(113)5
PIN # 12780

SECTION 02841M

W-BEAM GUARDRAIL

Delete Article 2.9 BARRIER DELINEATION, paragraph B and replace with the following:

B. Hardware – Refer to GW Series Standard Drawings.

Delete Standard Drawing GW 9A references to Barrier Reflectors: 0.075 INCH MIN (RUST RESISTANT STEEL OR PLASTIC)

Add the following to Standard Drawing GW 9A references to Barrier Reflectors:
RUST RESISTANT METAL OR URETHANE HINGED PLASTIC

Add the following to Article 2.8, "W-BEAM MEDIAN BARRIER":

B. Use steel posts for all median barrier.

Supplemental Specification
2012 Standard Specification Book

SECTION 02841M

W-BEAM GUARDRAIL

Delete Article 3.1, paragraph C and replace with the following:

C. Have a certified guardrail installer present at each location within the project and be an active participant during the installation and maintenance repair of guardrail or elements of a W-Beam guardrail system.

Delete Article 3.3, paragraph B and replace with the following:

B. Drive post if satisfactory results are obtained without damaging the post.
   1. Do not drive posts through asphalt. Refer to BA 4D Series Standard Drawings.

Add Article 3.6:

3.6 Raising Existing W-Beam Guardrail

A. Raise W-beam guardrail to maintain the minimum rail height according to BA Series Standard Drawings.
   1. Only W-beam guardrail with three-hole post system is eligible to be raised. Raise the three-hole post systems rail element only if the rail element is not currently set in the highest hole.
   2. W-beam guardrail with single-hole post system cannot be raised. Do not lift posts in order to raise rail.

B. Remove existing rail element and blocks.

C. Complete shoulder grading as required by BA Series Standard Drawings.

D. Reinstall rail elements and blocks on existing three-hole post system using the next hole up on the three-hole system to meet the height requirements according to BA Series Standard Drawings.
   1. Do not drill new holes in posts.

August 9, 2016

SPECIAL PROVISION

PROJECT # S-I15-1(113)5
PIN # 12780

SECTION 02842M

DELINEATORS

Add the following to Article 3.1 INSTALLATION:

B. Includes the removal and disposal of existing delineators.

C. Culvert and Maintenance Markers are to be considered TYPE II Delineators for payment.

D. Place delineators in the following order:
   1. First: Freeway Turnaround markers in required locations. See Standard Drawing SN 17 for details.
   2. Second: Culvert markers at end sections, inlets or outlets, at 90 degrees to roadway alignment. If Culvert marker falls with in Freeway Turnaround marker area then place Culvert marker to median side of markers. Place Culvert markers behind Barrier and Guardrail areas.
   3. Third: Maintenance markers at required locations.
   4. Forth: Type II in required locations. If location falls within 25 feet of a Culvert or Maintenance marker, place at 25-foot location from marker and continue to place spacing from Culvert or Maintenance marker. If Type II falls with in 25 feet of Barrier or Guardrail, place at 25-foot location and continue required spacing placement after end of Barrier or Guardrail location.
   5. Fifth: Type I in required locations. If location falls within 50 feet of a Culvert or Maintenance marker, place at 50-foot location from marker and continue to place spacing from Culvert or Maintenance marker. If Type I fall with in 50 feet of Turnaround area, Barrier or Guardrail, place at 50-foot location and continue required spacing placement after end of Turnaround area, Barrier or Guardrail location.

Supplemental Specification
2012 Standard Specification Book

SECTION 02843M

CRASH CUSHIONS AND BARRIER END TREATMENTS

Delete Article 3.1, paragraph A2b and replace with the following:

b. Crash Cushion Type C and End Treatment Types F, G, and H.
   1) Create block out hole by forming, saw cutting, or other similar method required when installing ground mounted system into asphalt or concrete.
   2) Refer to BA 4D Series Standard Drawings.

August 9, 2016

SPECIAL PROVISION

PROJECT # S-I15-1(113)5
PIN # 12780

SECTION 02844M

CONCRETE BARRIER

Delete Article 2.7, Paragraph B and replace with the following:

B. Hardware – Refer to GW Series Standard Drawings.

Delete Standard Drawing GW 9A references to Barrier Reflectors:
0.075 INCH MIN (RUST RESISTANT STEEL OR PLASTIC)

Add the following to Standard Drawing GW 9A references to Barrier Reflectors:
RUST RESISTANT METAL OR URETHANE HINGED PLASTIC

Supplemental Specification
2012 Standard Specification Book

SECTION 02844M

CONCRETE BARRIER

Delete Article 1.2, paragraph E - J and replace with the following:

E. Section 03056: Self-Consolidating Concrete (SCC)

F. Section 03152: Concrete Joint Control

G. Section 03211: Reinforcing Steel and Welded Wire

H. Section 03310: Structural Concrete

I. Section 03390: Concrete Curing

J. Section 03392: Penetrating Concrete Sealer

K. Section 09981: Concrete Coating

L. Section 13553: ATMS Conduit

Add the following to Article 1.3:

G. ASTM C 1315: Liquid Membrane-Forming Compounds Having Special Properties for Curing and Sealing Concrete

Add the following to Article 2.1:

B. SCC – Refer to Section 03056

Delete Article 2.6, paragraph C and replace with the following:

C. Prevent cracking or damage during handling and storage of precast units. Replace units with cracks greater than .007 inch or damaged precast units at no additional cost to the Department.

Delete Article 2.8 and replace with the following:

2.8 SURFACE SEALING MATERIAL

A. Penetrating concrete sealer – Refer to Section 03392.

B. Concrete coating – Refer to Section 09981.
   1. Use only when colored concrete coating is specified.
   2. Coating system includes water repellent and two coats of tinted concrete sealer.

Add the following to Article 3.2:

D. Curing – Refer to Section 03390.

Delete Article 3.3, paragraph E and replace with the following:

E. Mark barrier at beginning, end, and 1,000 ft intervals with 1½ inch numbers indicating the date of casting. Impress ¼ inch deep into the front face of barrier, 6 inches below the top.

Delete Article 3.3, paragraph G and replace with the following:

G. Seal concrete surfaces with a penetrating concrete sealer or a concrete coating.
   1. Penetrating concrete sealer
      a. Use when a colored concrete coating is not specified.
      b. Not required when curing compound meets ASTM C 1315. Refer to Section 03390.
      c. Refer to Section 03392.
   2. Concrete Coating
      a. Use when a colored concrete coating is specified.
      b. Refer to Section 09981.

Supplemental Specification
2012 Standard Specification Book

SECTION 02845M

HIGH TENSION CABLE BARRIER

Delete Article 1.2 and replace with the following:

1.2 RELATED SECTIONS

A. Section 01554: Traffic Control

B. Section 02056: Embankment, Borrow, and Backfill

C. Section 02841: W-beam Guardrail

D. Section 02843: Crash Cushions

E. Section 02890: Retroreflective Sheeting

F. Section 03055: Portland Cement Concrete

G. Section 03211: Reinforcing Steel and Welded Wire

H. Section 05120: Structural Steel

Add Article 2.2, paragraph G1d:

d. Use on construction project required when existing cable has been removed on a temporary basis. Refer to Section 01554.

Add Article 3.2, paragraph A3:

3. Maintain cable barrier and anchor systems during construction. Refer to Section 01554.

Supplemental Specification
2012 Standard Specification Book

SECTION 02890M

RETROREFLECTIVE SHEETING

Delete Article 2.2, paragraph A1 and replace with the following:

1. Meet or exceed the minimum requirements of ASTM Type XI.

Delete Article 2.3, paragraph A1a and replace with the following:

a. Meet or exceed the minimum requirements of ASTM Type XI.

Delete Article 2.3, paragraph C1 and replace with the following:

1. Vertical panels, barricade Types I, II, and III, and directional indicator barricades.
   a. Meet or exceed the minimum requirements of ASTM Type XI.
   b. Use of standard orange acceptable.

Delete the text immediately following Table 3 and replace with the following:

4. Use fluorescent retroreflective sheeting for orange and yellow.

Supplemental Specification
2012 Standard Specification Book

SECTION 02891M

TRAFFIC SIGNS

Delete Article 1.3 and replace with the following:

1.3 REFERENCES

A. ASTM A 123 / A 123M: Zinc (Hot-Dip Galvanized) Coatings on Iron and Steel Products

B. ASTM A 513: Electric-Resistance-Welded Carbon and Alloy Steel Mechanical Tubing

C. ASTM A 653: Steel, Sheet, Zinc-Coated (Galvanized) or Zinc-Iron Alloy-Coated (Galvanized) by Hot-Dip Process

D. ASTM A 787: Electric-Resistance-Welded Metallic-Coated Carbon Steel Mechanical Tubing

E. ASTM B 209: Aluminum and Aluminum-Alloy Sheet and Plate

F. American Plywood Association (APA) Product Standard

Delete Article 1.4, paragraph A1 and replace with the following:

A. Traffic Sign Components
   1. Panel – Assembly of substrate and attached sheeting. Several panels may be necessary to complete one sign. Panel types are:
      a. Type
         1) A: Retroreflective sheeting on sheet aluminum.
         2) PW: Retroreflective sheeting on plywood-backed sheet aluminum.
      b. Legend
         1) Non-reflective legend and border.
         2) Retroreflective legend and border.

Delete Article 2.1, paragraph B and replace with the following:

B. Substrate Aluminum – 0.080 or 0.125 inch thick as follows. Refer to ASTM B 209 alloy 6061-T6, or 5052-H38.
   1. Use 0.125 for signs installed on frame and Gore signs.
   2. Use 0.080 for all other signs.

Delete Article 2.1, paragraph C and replace with the following:

C. Plywood Backing – According to APA product standard PS 1-83, Group One: ½ inch thick.
   1. 90/90, high density BB exterior (Douglas Fir) B Grade.
   2. Plugged-core (Douglas Fir) with ½ inch maximum gaps.

Delete Article 2.1, paragraph E and replace with the following:

E. Posts, "T" and "U" brackets, extensions, and hardware according to SN Series Standard Drawings.
   1. Post P1
      a. 2⅜ inch outside diameter 0.080 (14 Gauge)
      b. Refer to ASTM A 513 or ASTM A 787
      c. Galvanize according to ASTM A 653 or ASTM A 123
      d. Color – Powder coated as required
   2. Post P2
      a. 2⅜ inch outside diameter 0.095 (13 Gauge)
      b. Refer to ASTM A 513 or ASTM A 787
      c. Galvanize according to ASTM A 653 or ASTM A 123
      d. Color – Powder coated as required
   3. Post P3
      a. 2⅞ inch outside diameter 0.134 (BWG 10)
      b. Refer to ASTM A 513 or ASTM A 787
      c. Galvanize according to ASTM A 653 or ASTM A 123
      d. Color – Powder coated as required
   4. Post P4
      a. 2⅞ inch outside diameter 0.160 (NP 40)
      b. Refer to ASTM A 513 or ASTM A 787
      c. Galvanize according to ASTM A 653 or ASTM A 123
   5. Post P5
      a. 2⅞ inch outside diameter 0.276 (SCH 80)
      b. Refer to ASTM A 513 or ASTM A 787
      c. Galvanize according to ASTM A 653 or ASTM A 123
   6. "T" and "U" Extension and 90 degree Post Extension
      a. Manufacture according to SN Series Standard Drawings.
      b. Galvanize according to ASTM A 653 or ASTM A 123

7. Standard Pipe Posts
    a. Match post size with base requirements.
8. S Section and W Section steel posts
    a. Structural Steel: Refer to Section 05120.
    b. Match post size with base requirements

Supplemental Specification
2012 Standard Specification Book

SECTION 02893M

OVERHEAD SIGN/VMS STRUCTURE

Delete Article 1.3 and replace with the following:

1.3 REFERENCES

A. AASHTO M 111: Zinc (Hot-Dip Galvanized) Coatings on Iron and Steel Products

B. AASHTO M 232: Zinc Coating (Hot-Dip) on Iron and Steel Hardware

C. AASHTO M 270: Structural Steel for BridgesD.ASTM A 36: Carbon Structural Steel

E. ASTM A 53: Pipe, Steel, Black and Hot-Dipped, Zinc-Coated, Welded and Seamless

F. ASTM A 194: Carbon and Alloy Steel Nuts for Bolts for High Pressure or High Temperature Service, or Both

G. ASTM A 307: Carbon Steel Bolts and Studs, 60 000 PSI Tensile Strength

H. ASTM A 314: Stainless Steel Billets and Bars for Forging

I. ASTM A 500: Cold-Formed Welded and Seamless Carbon Steel Structural Tubing in Rounds and Shapes

J. ASTM A 563: Carbons and Alloy Steel Nuts

K. ASTM B 221: Aluminum and Aluminum-Alloy Extruded Bars, Rods, Wire, Profiles, and Tubes

L. ASTM B 308: Aluminum-Alloy 6061-T6 Standard Structural Profiles

M. ASTM B 429: Aluminum-Alloy Extruded Structural Pipe and Tube

N. ASTM C 1107: Packaged Dry, Hydraulic-Cement Grout (Nonshrink)

O. ASTM F 436: Hardened Steel Washers

P. ASTM F 593: Stainless Steel Bolts, Hex Cap Screws, and Studs

Q. ASTM F 594: Stainless Steel Nuts

R. ASTM F 844: Washers, Steel, Plain (Flat), Unhardened for General Use

S. ASTM F 1554: Anchor Bolts, Steel, 36, 55, and 105-ksi Yield Strength

T. AASHTO Standard Specifications for Structural Supports for Highway Signs, Luminaires, and Traffic Signals, 5th edition

U. American Institute of Steel Construction (AISC)

V. American Petroleum Institute (API)

W. AWS D1.1 Structural Welding Code – Steel

X. AWS D1.2 Structural Welding Code – Aluminum

Delete Article 2.1, paragraph A.3.c and replace with the following:

c. Furnish nuts and washers. Refer to ASTM A 563, A 194 and F 436.

Delete Article 2.1, paragraph C.1 and replace with the following:

1. Use low carbon steel according to ASTM A 53 Grade B, ASTM A 500 Grade B, or API-5L-X42, except use chemical composition requirement of silicon either 0.00 to 0.04 percent or 0.15 to 0.25 percent. Refer to ASTM A 53 Grade B or A 500 Grade B (35,000 psi min yield strength) for other elements.

Delete Article 2.1, paragraph D.2 and replace with the following:

2. Refer to ASTM F 593 Type 304 for stainless steel bolts and ASTM F 594 for stainless steel nuts.

August 9, 2016

SPECIAL PROVISION

PROJECT # S-I15-1(113)5
PIN # 12780

SECTION 02913S

ROCK MULCH

Add Section 02913:

PART 1 GENERAL

1.1 SECTION INCLUDES

A. Application of rock mulch for landscaping and erosion control.

1.2 RELATED SECTIONS

A. Section 02075: Geotextiles

1.3 REFERENCES Not Used

1.4 DEFINITIONS Not Used

1.5 SUBMITTALS

A. Submit rock mulch gradation and samples from the proposed source depicting the color, shape, and size range to the Engineer for approval.

PART 2 PRODUCTS

2.1 ROCK MULCH

A. Rock shall be well graded in size throughout the rock mulch layer to produce a dense mass.
   1. Rock Type/Color is Black Lava.
   2. The rock mulch layer thickness at least 4.00” thick.
   3. Refer to Table 1 for gradation limits.

4. Gradation control will be by sample measurements or by visual inspection, as determined by the Engineer.

Table 1

Rock Mulch Gradation Limit	
Stone Diameter Range (in)	Percent of Gradation Smaller Than
3.75 to 4.25	100
3.00 to 3.50	85
2.50 to 2.88	50
1.00 to 1.50	15
0.25	10

B. Rock material may be smooth or rough/angular.

C. Provide uniform rock mulch material that results in a consistent appearance throughout the project.

2.2 WEED BARRIER GEOTEXTILE

A. Refer to Section 02075.

PART 3 EXECUTION

3.1 SUBGRADE PREPARATION

A. Prepare the subgrade as shown on the plans. Obtain approval from the Engineer prior to placing rock mulch material.

B. Excavate/grade along edge of rock mulch perimeter to a depth of 4.00 inches such that final surface of rock mulch is flush with adjacent surfaces.

3.2 WEED BARRIER GEOTEXTILE PLACEMENT

A. Refer to Section 02075.

B. Remove existing ground cover to facilitate placement of weed barrier geotextile.

C. Install weed barrier geotextile per manufacturer's recommendations and as shown in the plans to prevent weeds from growing up through the rock

mulch. Place geotextile across the entire surface to be treated with rock mulch material.

D. Anchor/key-in geotextile, at top of slope, a minimum of 12 inches below the surface of the subgrade. Roll geotextile vertically down the slope and overlap edges a minimum of 12 inches.

3.3 ROCK MULCH PLACEMENT

A. Place rock mulch at locations indicated in the project plans.

B. Spread the rock mulch material to provide the intended naturalistic appearance as directed by the Engineer.

C. Spread the rock mulch material to provide a minimum of 4.00 inches cover on all areas of geotextile, unless otherwise specified by the Engineer. Spread smaller rocks so as to fill in the voids around the larger rocks. Do not leave any portion of the geotextile exposed to direct sunlight.

D. Place rock mulch with finished surface flush with adjacent surfaces.

END OF SECTION

February 28, 2013

SPECIAL PROVISION

PROJECT # S-I15-1(113)5
PIN # 12780

SECTION 02924S

INVASIVE WEED CONTROL

Add Section 02924:

PART 1 GENERAL

1.1 SECTION INCLUDES

A. Controlling the introduction and spread of noxious weeds on construction projects.

1.2 RELATED SECTIONS Not Used

1.3 REFERENCES

A. Utah Noxious Weed Control Act

1.4 DEFINITIONS

A. Noxious weeds subject to control are listed on the Utah State Noxious Weed List and the county's weed list that applies based on the project location.

B. Refer to the Section, article 3.3 for a list of the Utah State Noxious Weeds (Table 1) and the county lists (Table 2) for additional noxious weeds.

1.5 SUBMITTALS Not Used

1.6 PAYMENT PROCEDURES

A. Include payment for cleaning earth-moving construction equipment under mobilization.

B. Include payment for the control of invasive weeds using pre-emergent, selective, and non-selective herbicides under mobilization.

1.7 QUALITY ASSURANCE

A. Regulatory Requirements:
   1. Follow all regulatory, application, and safety precautions listed by the herbicide manufacturer. Refer to Utah Noxious Weed Control Act: Utah Code - Title 04 - Chapter 17.
   2. Apply herbicides using only state licensed pesticide applicators.

1.8 SEQUENCING

A. Clean all earth-moving equipment before bringing them on the project.

B. Treat existing noxious weeds 10 days before starting earthwork operations.

PART 2 PRODUCTS

2.1 HERBICIDE

A. Refer to this Section, article 3.3 for a list of noxious weeds subject to control and the recommended herbicide for each species.

B. Use commercially available herbicides specified to control the weed species identified.

PART 3 EXECUTION

3.1 PREPARATION

A. Use high-pressure water blasting or steam cleaning methods to clean all earth-moving construction equipment (scrapers, bulldozers, excavators, backhoes, trenchers) of dirt, mud, and seed residue before initially entering the project.

3.2 EXAMINATION

A. Verify and locate all noxious weeds on the project. Contact the county weed control supervisor or the Department's region landscape architect if assistance is needed for identification.

3.3 CONTROLLING INVASIVE WEEDS

A. Spray invasive weeds located within the project limits before starting earth disturbing activities and if they appear during construction. Use pre-emergent, selective, and non-selective herbicides as appropriate (See Noxious Weed Tables 1 and 2 below). Apply herbicide as directed on the manufacturer's label.

B. Noxious Weed Tables:

Table 1

Utah State Noxious Weeds		
Common Name	**Scientific Name**	**Herbicide**
Bermudagrass*	*Cynodon dactylon*	Glyphosate
Black henbane	*Hyoscyamus niger*	Tordon (picloram) & Escort
Canada thistle	*Cirsium arvense*	2,4-D, Dicamba, Picloram
Dalmation toadflax	*Linaria genistifolia*	Tordon (picloram)
Diffuse knapweed	*Centaurea diffusa*	2,4-D+Dicamba or Picloram or Clopyralid
Dyer's woad	*Isatis tinctoria*	2,4-D+Dicamba or Chlorsulfuron
Field bindweed	*Convolvulus arvensis*	Dicamba+2,4-d or Picloram
Hoary cress, (whitetop)	*Cardaria draba*	2,4-D+Dicamba or Chlorsulfuron
Houndstounge	*Cynoglossum officinale*	Tordon (picloram)
Johnsongrass	*Sorghum halepense*	Glyphosate
Leafy Spurge	*Euphorbia esula*	Dicamba or Picloram
Medusahead	*Taeniatherum caput-medusae*	Glyphosate
Musk thistle	*Carduus nutans*	2,4-D amine, Metsulfuron or Picloram
Ox-eye daisy	*Chrysanthemum leucanthemum*	Tordon (picloram) & clopyralid
Perennial pepperweed	*Lepidium latifolium*	Metsulfuron or Chlorsulfuron
Perennial sorghum	*Sorghum halepense*	Glyphosate
Poison hemlock	*Conium maculatum*	Tordon (picloram)
Purple loosestrife	*Lythrum salicaria*	Glyphosate (Rodeo aquatic label)

Quackgrass	*Elytrigia repens*	Glyphosate
Russian knapweed	*Centaurea repens*	Picloram, Clopyralid or Chlorsulfuron
Saltcedar	*Tamarix ramosissima*	Habitat or Arsenal
Scotch thistle	*Onopordum acanthium*	2,4-D amine, Metsulfuron or Picloram
Spotted knapweed	*Centaurea maculosa*	2,4-D+Dicamba, Picloram or Clopyralid
Squarrose knapweed	*Centaurea virgata*	Picloram
St. Johnswort	*Hypercium perforatum*	Tordon (picloram) & Escort
Sulfur cinquefoil	*Potentilla recta*	Tordon (picloram)
Yellow star-thistle	*Centaurea solstitialis*	Picloram or Clopyralid
Yellow toadflax	*Linaria vulgaris*	Tordon (picloram)
*Do not consider Bermudagrass a noxious weed in Washington County		

Table 2

County Noxious Weeds		
Common Name	**Scientific Name**	**Herbicide**
Beaver County		
Bull thistle	*Cirsium vulgare*	2,4-D amine or Dicamba
Box Elder		
Catchweed	*Asperugo procumbens*	2,4-D amine or Dicamba
Cache County		
Goatsrue	*Galega officinalis*	2,4-D+Dicamba
Puncturevine	*Tribulus terrestris*	2,4-D+Dicamba
Carbon County		
Russian olive	*Elaeagnus angustifolia*	2,4-D, Dicamba, or Glyphosate
Davis County		
Buffalobur	*Solanum rostratum*	2,4-D or Dicamba
Yellow nutsedge	*Cyperus esculentus*	Glyphosate
Duchesne County		
Russian olive	*Elaeagnus angustifolia*	2,4-D, Dicamba, or Glyphosate
Water hemlock	*Cicuta maculata*	2,4-D amine or Dicamba

Grand County		
Russian olive	*Elaeagnus angustifolia*	2,4-D, Dicamba, or Glyphosate
Iron County		
Western whorled milkweed	*Asclepias subverticillata*	2,4-D or Dicamba
Bull thistle	*Cirsium vulgare*	2,4-D amine or Dicamba
Puncturevine	*Tribulus terrestris*	2,4-D+Dicamba
Juab County		
Blue lettuce	*Lactuca pulchella*	2,4-D amine, Arsenal or Metsulfuron
Morgan County		
Common burdock	*Arctium minus*	2,4-D+Dicamba
Salt Lake County		
Garlic mustard	*Alliaria petiolata*	Glyphosate
Myrtle spurge	*Euphorbia myrsinities*	Glyphosate or Dicamba
San Juan County		
Camelthorn	*Alhagi pseudalhagi*	Arsenal
Russian olive	*Elaeagnus angustifolia*	2,4-D, Dicamba, or Glyphosate
Buffalobur	*Solanum rostratum*	2,4-D or Dicamba
Western whorled milkweed	*Asclepias subverticillata*	2,4-D or Dicamba
Sevier County		
Russian olive	*Elaeagnus angustifolia*	2,4-D, Dicamba, or Glyphosate
Summit County		
Common Burdock	*Arctium minus*	2,4-D+Dicamba
Vipers bugloss	*Anchusa officinalis*	2,4-D amine or Dicamba
Tooele County		
Jointed goatgrass	*Aegilops cylindrica*	Glyphosate
Uintah County		
Russian olive	*Elaeagnus angustifolia*	2,4-D, Dicamba, or Glyphosate
Utah County		
Common reed	Phragmites australis	
Washington County		
Western whorled milkweed	*Asclepias subverticillata*	2,4-D, or Dicamba
Silverleaf nightshade	*Solanum elaeagnifolium*	2,4-D or Dicamba

Wayne County		
Russian olive	*Elaeagnus angustifolia*	2,4-D, Dicamba, or Glyphosate
Bull thistle	*Cirsium vulgare*	2,4-D amine or Dicamba
Weber County		
Puncturevine	*Tribulus terrestris*	2,4-D+Dicamba
Use rates: Use rates for herbicides vary, follow the use rate on the LABEL for each herbicide		

END OF SECTION

September 13, 2016

SPECIAL PROVISION

PROJECT # S-I15-1(113)5
PIN # 12780

SECTION 02931M

POLE PLANTINGS/WILLOW CUTTINGS

Delete Article 2.1, paragraph A and replace with the following:

A. Collect Freemont cottonwood (*Populus freemontii*) poles, coyote willow (*Salix exigua*) cuttings, and Goodding's black willow (*Salix gooddingii*) cuttings from live native plants from October 15 to February 15.

Delete Article 2.1, paragraph F and replace with the following:

F. Supply poles and cuttings that meet the following size constraints:
   1. Cottonwood Poles – Cut branches at a 45 degree angle, 6 ft long and 1 to 3 inches in diameter from one to three-year-old growth.
   2. Willow Cuttings – Cut stems at a 45 degree angle, 4.5 ft long and 1/3 to 3/4 inch in diameter from one to two-year-old growth.

Delete Article 3.2, paragraph B and replace with the following:

B. Create a hole deep enough to accommodate all but 6 to 8 inches of the length of the pole or cutting using an auger or water stinger.

Delete Article 3.2, paragraph D and replace with the following:

D. Place one pole or three cuttings in the hole basal end first.

August 9, 2016

SPECIAL PROVISION

PROJECT # S-I15-1(113)5
PIN # 12780

SECTION 02961M

ROTOMILLING

Delete Subparagraph 3, Paragraph A, Article 2.2, "EQUIPMENT" and replace with the following:

3. Maximum of 0.25 inch between the cutting teeth on the mandrel.

Delete Paragraph D, Article 3.1, "PROCEDURE" and replace with the following:

D. Load the reclaimed material from milling operation into a truck in one operation. Rotomill tailings not used on the job site as per plans become the property of the Contractor and are to be removed and disposed of by the Contractor as per UDOT specifications. No Rotomill tailings are allowed to be placed on the job site, other than those specifically outlined in the plans and specifications.

.

Add the following to Paragraph C, Article 3.1, "PROCEDURE":

3. May adjust the speed of milling operation to obtain continuous horizontal grind marks on roadway surface without a skipping pattern.

February 01, 2016

SPECIAL PROVISION

PROJECT # S-I15-1(113)5
PIN # 12780

SECTION 03055M

PORTLAND CEMENT CONCRETE

Delete Article 2.2 and replace with the following:

2.2 CEMENT

A. Use Type V Portland Cement or blended hydraulic cement unless otherwise specified. Refer to ASTM C 150, ASTM C 595, ASTM C 1157.

B. Portland Cement
   1. Refer to Tables 1 and 3 in ASTM C 150.
   2. Refer to Table 2 in ASTM C150 for low-alkali cement.

C. Blended Hydraulic Cement
   1. Blended hydraulic cement substituted for Portland Cement:
      a. Use ASTM C 1567 to verify that expansion is less than 0.1 percent 14 days after the zero reading.
      b. Refer to the equivalent cements listed in Table 3.
   2. Do not exceed 30 percent total pozzolan limit when adding flyash to a blended hydraulic cement.
      a. Submit documentation of the total pozzolan content with the mix design.

Table 3

Portland Cement/Blended Hydraulic Cement Equivalencies		
AASHTO M 85 **(Low Alkali)**	**ASTM C 595**	**ASTM C 1157**
*Type I	IP	GU
*Type II	IP (MS)	MS
*Type III	-	HE
Type V	-	HS

*Use only when specified

C. Do not use cement that contains lumps or is partially set.

D. Use cement from the list of Department qualified suppliers list maintained by the Department Materials Quality Assurance Section.

E. Do not mix cements originating from different sources.

F. Do not use air-entrained cement.

G. Department will sample and test the cement according to UDOT Quality Management Plan 502: Cement.

H. Department will sample and test the cement according to UDOT Quality Management Plan 502: Cement.

Supplemental Specification
2012 Standard Specification Book

SECTION 03055M

PORTLAND CEMENT CONCRETE

Delete Article 1.2 and replace with the following:

1.2 RELATED SECTIONS

A. Section 03390: Concrete Curing

Delete Article 1.4 and replace with the following:

1.4 DEFINITIONS

A. Cold Weather Protection Period: The required time during which the concrete is maintained at or above a specific temperature to prevent freezing of the concrete and to ensure the necessary strength development for structural safety.

Delete Article 1.5, paragraphs F, F, G, and H, and replace with the following:

F. Written plan for admixtures. Refer to this Section, Article 2.5, paragraph C.

G. Verification that fly ash or other pozzolan used is from a pre-qualified supplier. Refer to this Section, Article 2.6, paragraph D.

H. Verification that the batch plant meets the requirements of the UDOT Quality Management Plan for Ready-Mix Concrete.

I. Cold Weather Concreting Plan and Hot Weather Concreting Plan for approval.
   1. Include the following:
      a. Detailed procedures for the placement, protection, curing, and temperature monitoring of concrete during cold and hot weather.
      b. Procedures to be implemented upon abrupt changes in weather conditions or equipment failures.

c. Refer to this Section, Article 3.4, paragraph D for cold weather concreting requirements and Article 3.4, paragraph E for hot weather concreting requirements.

2. Allow the Engineer 10 calendar days to review and approve the plans.
   a. The Engineer may grant an increase in contract time when this review and approval time is exceeded.
   b. This review period applies each time the plans are submitted.
3. Do not begin cold weather concreting before the Cold Weather Concreting Plan is approved.
4. Do not begin hot weather concreting before the Hot Weather Concreting Plan is approved.
5. Not required for precast concrete members provided by prequalified suppliers. Refer to this Section, Article 3.4D1.

Delete Article 2.1, Table 2, note ** and replace with the following:

** For *f* ’c over 4,000 psi, design and proportion mixes according to ACI Manual of Concrete Practice 301: Specifications for Concrete and project specific criteria. Use Table 2 Class AA(AE) Air Content Percentages according to coarse aggregate size for these mixes.

Delete Article 3.4, paragraphs D and E, and replace with the following:

D. Cold Weather – Comply with the following when placing, finishing, curing, and protecting concrete exposed to cold weather during the protection period. Cold weather applies when the temperature is forecast to fall below 35 degrees F during the protection period.
   1. Provide necessary cold weather protection for placing, finishing, curing and protecting in-place concrete such as covers, insulation, and heat.
      a. Follow the approved Cold Weather Concreting Plan when placing cast-in-place concrete.
      b. Follow the prequalified supplier’s approved Quality Control Plan when fabricating precast concrete members.
   2. Concrete materials
      a. Do not use chemical anti-freeze additives in the concrete. This does not apply to normal accelerators. Refer to AASHTO M 194.
      b. Remove and replace concrete damaged by frost action at no additional cost to the Department.
      c. Do not use material containing frost or lumps.

3. Determine the concrete compressive strength by one of the following methods:
    a. Field cured cylinders cured and protected the same as the concrete being protected.
    b. Maturity method. Refer to AASHTO T 325.
4. Maintain the temperature of the concrete at or above 50 degrees F during and after placement until the end of the protection period.
    a. Measure the specified concrete temperature at the concrete surface. Use surface thermometers insulated from the surrounding air.
5. Placing concrete
    a. Do not place concrete during adverse weather including rain, snow, and high winds without adequate protection approved by the Engineer.
    b. Do not proceed with the placement of concrete if the temperature of all contact surfaces, including reinforcement, is less than 36 degrees F or greater than 95 degrees F.
    c. Cease placement operations when the ambient temperature is 40 degrees F and decreasing unless adequate precautions are taken according to the approved Cold Weather Concreting Plan.
6. Protection of in-place concrete
    a. Maintain the concrete above 50 degrees F during placement and until the end of the protection period.
        1) The protection period is the time required for the concrete to reach a compressive strength of at least 3,500 psi.
        2) Extend the duration of the protection period at least 24 hr beyond the termination of the cure before exposing the concrete to freezing temperatures when curing by the water method. Refer to Section 03390.
    b. Comply with the following when heating is required.
        1) Adequately vent combustion-type heaters that produce carbon monoxide.
        2) Position heaters and ducts so the hot dry air does not cause areas of the concrete surface to overheat or dry.
        3) Keep concrete surfaces moist to avoid excessive loss of moisture from the concrete when applying external heat.
7. Termination of protection
    a. Limit the drop in temperature of concrete surfaces to 40 degrees F during any 24 hour period when removing cold weather protection until the surface temperature of the concrete reaches that of the ambient air temperature.

E. Hot Weather – Comply with the approved Hot Weather Concreting Plan and with the following when placing, finishing, curing, and protecting concrete exposed to hot weather during the protection period. Hot weather applies when the temperature is forecast to rise above 95 degrees F during the protection period:

1. Cool all surfaces that will come in contact with the concrete to below 95 degrees F.

Supplemental Specification
2012 Standard Specification Book

SECTION 03211M

REINFORCING STEEL AND WELDED WIRE

Delete Article 1.3 and replace with the following:

1.3 REFERENCES

A. AASHTO M 31: Deformed and Plain Carbon-Steel Bars for Concrete Reinforcement

B. AASHTO M 55: Steel Welded Wire Reinforcement, Plain, for Concrete

C. AASHTO M 111: Zinc (Hot-Dip Galvanized) Coatings on Iron and Steel Products

D. AASHTO M 235: Epoxy Resin Adhesives

E. AASHTO T 106: Compressive Strength of Hydraulic Cement Mortar (Using 50-mm or 2-in Cube Specimens)

F. ASTM A 108: Steel Bar, Carbon and Alloy, Cold-Finished

G. ASTM A 493: Stainless Steel Wire and Wire Rods for Cold Heading and Cold Forging

H. ASTM A 706: Low-Alloy Steel Deformed and Plain Bars for Concrete Reinforcement

I. ASTM A 767: Zinc-Coated (Galvanized) Steel Bars for Concrete Reinforcement

J. ASTM A 775: Epoxy-Coated Steel Reinforcing Bars

K. ASTM A 955: Deformed and Plain Stainless-Steel Bars for Concrete Reinforcement

L. ASTM A 970: Headed Steel Bars for Concrete Reinforcement

M. ASTM E 1512: Testing Bond Performance of Bonded Anchors

N. American Welding Society (AWS) Standards

O. Concrete Reinforcing Steel Institute (CRSI) Manual of Standard Practice

P. UDOT Quality Management Plans (QMP)

Add the following to Article 2.1:

C. Refer to ASTM A 955, Type XM-28, Grade 60 for deformed or plain stainless steel bars.

Delete Article 2.2, paragraph A and replace with the following:

A. Refer to ASTM A 775 or AASHTO M 111.

Delete Article 2.7, paragraph B and replace with the following:

B. Provide epoxy coated, painted, or plain basket assemblies with a U-shaped leg for the assembly frame and a minimum 0.3 inch diameter wire with sufficient structure to maintain the proper location and alignment of dowels during concrete pavement placement as approved by the Engineer.

Add the following to Article 2.7:

D. Provide bar supports and wire ties for use with stainless steel bars that meet the following:
   1. Meet the requirements of Table 2.
   2. Provide bar supports that are plastic coated, epoxy coated, plastic, or stainless steel conforming to the requirements of ASTM A 493, Type 316.
   3. Provide wire ties that are plastic coated, plastic, or stainless steel conforming to the requirements of ASTM A 493, Type 316, annealed.
   4. Provide tie-down wires that are plastic coated or stainless steel conforming to the requirements of ASTM A 493, Type 316, annealed.

Add the following to Article 2.8:

D. Use stainless steel splice coupler with stainless steel reinforcement.

Delete Article 3.1, paragraph B.1.a and replace with the following:

a. Meet requirements of ASTM A 775 Appendix A.2 for repair material.

Add the following to Article 3.1:

E. Ship, handle, and store stainless reinforcing steel so it does not come in contact with carbon steel.
   1. Cover stainless reinforcing steel with tarps during outdoor storage.
   2. Separate bundles of stainless reinforcing steel from other types of reinforcing steel with wooden spacers.
   3. Store stainless reinforcing steel on wooden supports off the ground or floor.

Add the following to Article 3.2:

O. Place stainless steel reinforcement so that it does not come in contact with carbon steel.
   1. Do not tie stainless steel to uncoated or coated carbon steel reinforcement, galvanized attachments, or galvanized conduits.
      a. Direct contact is not acceptable.
      b. Use nylon or polyethylene spacers to maintain a minimum 1 inch clearance between the two metals and bind them with nylon cable ties when stainless reinforcing steel or dowels must be near coated or uncoated carbon steel reinforcing or galvanized metals,.
      c. Either bar may be sleeved with a continuous ⅛ inch minimum thickness polyethylene or nylon tube extending at least 1 inch in each direction past the point of closest contact between the two dissimilar bars where insufficient space exists to maintain this minimum.
   2. Use only epoxy coated or non-metallic snap ties, straps, or other forming hardware in members that use stainless steel reinforcement to prevent corrosion from dissimilar metals.

Supplemental Specification
2012 Standard Specification Book

SECTION 03310M

STRUCTURAL CONCRETE

Delete Article 1.3, paragraph H and replace with the following:

H. UDOT Structures Quality Control/Quality Assurance (QC/QA) Procedures

Delete Article 1.5, paragraph A3c and replace with the following:

c. Certify that engineering calculations have been checked according to the UDOT Structures QC/QA Procedures.

Delete Article 1.5, paragraph B3 and replace with the following:

3. Hot and cold weather concreting plans according to Section 03055.

Add the following to Article 2.1, paragraph D:

4. Use only where specified in the plans.

Delete Article 3.2, paragraph A and replace with the following:

A. Deck – Do not place parapet forms or parapet for at least seven days after deck placement and until the deck has attained the specified 28 day minimum compressive strength, or leave all falsework in place and design it to carry all additional loads that are part of the parapet placement process.
   1. Do not allow the installation of the parapet and parapet forms to interrupt the curing of the deck and approach slabs when installed before curing is complete.

Add the following to Article 3.2:

F. Do not backfill abutments, wingwalls, and retaining walls until all concrete has been in place at least 7 days and has attained 100 percent of the specified 28 day minimum compressive strength based on field cured cylinders. Do not interfere with curing.

G. Do not place the approach slab until the sleeper slab concrete has been in place at least seven days or has attained 75 percent of the specified 28 day compressive strength.

Delete Article 3.3, paragraph E and replace with the following:

E. Do not backfill until the concrete has been in place at least 7 days and has attained 100 percent of the specified 28 day minimum compressive strength based on field cured cylinders.

Delete Article 3.4 and replace with the following:

3.4 HEADWALLS

A. Allow apron and pipe collar to attain 75 percent of the specified 28 day minimum compressive strength based on field cured cylinders before the remainder of the headwall is constructed.

B. Construct wingwalls monolithically.

C. Do not backfill headwalls and wingwalls until all concrete has been in place at least 7 days and has attained 100 percent of the specified 28 day minimum compressive strength based on field cured cylinders.

Delete Article 3.9, paragraphs B and C and replace with the following:

B. Keep all traffic off concrete bridges and culverts for 14 days after final concrete placement, until all concrete is fully cured, and until all concrete achieves 100 percent of the specified 28 day minimum compressive strength based on field cured cylinders.

C. Keep all traffic off bridge deck and approach slab closure pours for at least 7 days after final concrete placement, until all concrete is fully cured, and until all concrete achieves 100 percent of the specified 28 day minimum compressive strength based on field cured cylinders.

1. High-early strength concrete used in bridge deck and approach slab closure pours may be opened to traffic at least 3 days after final concrete placement and after concrete achieves 100 percent of the specified 28 day minimum compressive strength based on field cured cylinders.

Delete Article 3.9, paragraph G2b and replace with the following:

b. Use fog sprayers upwind of the placement operations to effectively increase the relative humidity. Refer to Section 03390.

Supplemental Specification
2012 Standard Specification Book

SECTION 03311M

JOINT CLOSURE

Add the following to Article 1.2:

E. Section 03390: Concrete Curing

Delete Article 1.5 and replace with the following:

1.5 SUBMITTALS

A. Concrete mix design for approval. Refer to Section 03055.

B. Hot and cold weather concreting plans. Refer to Section 03055.

C. Manufacturer's certificate of compliance for reinforcing steel.

Delete Article 2.1, paragraph A and replace with the following:

A. Portland Cement Concrete Class AA(AE) – Refer to Section 03055.
   1. Do not use High Early Strength concrete, unless specified in the plans.

Delete Article 3.4 and replace with the following:

3.4 PLACE CONCRETE

A. Refer to Section 03055 and Section 03310 for placing and finishing concrete.

B. Clean existing concrete and steel surfaces. Dampen the cleaned surfaces before placing concrete.

C. Cure concrete according to the requirements for cast-in-place concrete closure pours in bridge decks and approach slabs in Section 03390.

September 6, 2016

SPECIAL PROVISION

PROJECT # S-I15-1(113)5
PIN # 12780

SECTION 03339S

PRECAST CONCRETE DECK PANEL

Delete Section 03339 and replace with the following:

PART 1 GENERAL

1.1 SECTION INCLUDES

A. Materials and procedures for constructing and placing partial-depth precast concrete deck panels.

1.2 RELATED SECTIONS

A. Section 03055: Portland Cement Concrete

B. Section 03056: Self-Consolidating Concrete (SCC)

C. Section 03211: Reinforcing Steel and Welded Wire

D. Section 03412: Prestressed Concrete

1.3 REFERENCES

A. AASHTO M 111: Zinc (Hot-Dip Galvanized) Coatings on Iron and Steel Products

B. AASHTO M 203: Steel Strand, Uncoated Seven-Wire for Prestressed Concrete

1.4 DEFINITIONS

A. Working Drawings – Drawings produced by the Contractor that supplement the contract drawings to provide information not included in the contract documents but that is required to fabricate, erect, transport, or temporarily support the structure or structural elements in the completion of the work.
   1. Working drawings do not supersede the contract drawings.

B. Approval of Working Drawings – Acceptance by the Department for use on the project. The Department will review working drawings for general conformance with the design concept and compliance with the contract documents. Review and approval do not relieve the Contractor from responsibility for errors, correctness of details, conformance to the contract, and the successful completion of the work.

1.5 SUBMITTALS

A. Working Drawings

1. Detailed shop drawings of all fabricated materials for approval.
   a. Include the following:
      1) Complete details and substantiating calculations of the method, materials, and equipment to be used in the prestressing operations, including any additions or rearrangement of reinforcing steel and any revision in concrete dimensions from that shown on the plans.
      2) Method and sequence of stressing. Include complete specifications and details of the prestressing steel, working stresses, and all other data pertaining to the prestressing operation. Include the proposed arrangement of the prestressing steel in the panels. Include the cutting or release pattern.
      3) Locations and details of all lifting bars or devices.
      4) Type and amount of any additional reinforcing required for lifting.
      5) Minimum compressive strength attained before handling the precast elements.
   b. Do not begin work until receiving approval of the shop drawings. The Department will reject units fabricated before shop drawing approval.
2. Erection drawings for all precast, prestressed concrete panels.
   a. Fully illustrate the proposed method of erection. Provide complete details of the process including but not limited to the following:
      1) Temporary supports, bracing, guys, dead-men, lifting devices, connection details, and attachments to bridge members.
      2) The erection schedule and sequence, crane location, crane capacities, location of lifting points on the bridge members, panel weights, and any other assumed loads during progressive stages of construction.
      3) Complete details for all anticipated phases and conditions during erection.

4) Minimum number and arrangement of items such as primary members, secondary members, and connections that must be installed, braced, and properly connected to provide structural integrity and stability.
5) Incorporate into the plan the execution requirements outlined in this Section, article 3.1.

b. Include supporting engineering calculations.
c. Provide the seal of a PE or SE licensed in the state of Utah.
1) The PE or SE must approve all changes to the erection drawings before implementation.

d. Obtain the Department's approval when specified on the plans.
e. Submit 10 days before beginning erection when approval is not required.
f. Do not begin erection before receiving approval of the erection drawings when approval is required.

3. Prepare drawings according to the following:
a. Submit drawings electronically in PDF format. Use 11 x 17 inch sheets with a 1½ inch blank margin on the left edge. Place the following information in the title block in the lower right corner of each sheet:
1) State Project Designation
2) State Project Name
3) State Structure Number
4) Contractor, Fabricator, or Erector Name
5) Contractor, Fabricator, or Erector Drawing Number
6) Contractor, Fabricator, or Erector Sheet Number

b. Revise and resubmit drawings when directed by the Department.
c. Provide the seal of a PE or SE licensed in the State of Utah when required in the contract. Place the seal in the lower right corner of each sheet when required.

4. Prepare engineering calculations according to the following:
a. Submit calculations electronically in PDF format. Use 8½ x 11 inch sheets with a 1 inch blank margin on the left edge or 11 x 17 inch sheets with a 1½ inch blank margin on the left edge. Title block location is at the top of 8½ inch by 11 inch sheets or the lower right corner of 11 x 17 inch sheets. Place the following information in the title block:
1) State Project Designation
2) State Project Name
3) State Structure Number
4) Contractor, Fabricator, or Erector Name
5) Contractor, Fabricator, or Erector Drawing Number
6) Contractor, Fabricator, or Erector Sheet Number

b. Provide the seal of a PE or SE licensed in the State of Utah on all engineering calculations. Place the seal on the calculation cover sheet.

c. Certify that engineering calculations have been checked according to the UDOT QC/QA Procedures.

5. Allow the Engineer 14 calendar days to review and approve working drawings and supporting calculations.

a. The Engineer may grant an increase in the number of working days for the project when that time is exceeded.

b. This review period applies each time the drawings and calculations are submitted.

6. Do not deviate from the approved drawings unless authorized in writing by the Engineer. Assume the responsibility for costs incurred due to faulty detailing or fabrication.

B. Material Submittals

1. Certifications

a. Certification stating the manufacturer's minimum guaranteed ultimate tensile strength for each sample of prestressing steel.

b. The certified calibration chart required by Section 03412.

2. Pre-stressing Steel

a. Three six foot long strand samples from each heat or lot that will be used on the project, at no additional cost to the Department.

b. Testing may require 14 calendar days after the date of receipt.

C. Repair Procedures

1. Written procedures for repairing defects and breakage of precast elements for approval.

D. Casting Schedule

1. Provide the Engineer a tentative casting schedule at least two weeks in advance to make inspection and testing arrangements. A similar notification is required for the shipment of precast elements to the job site.

PART 2 PRODUCTS

2.1 MATERIALS

A. Concrete

1. Class AA(AE) Concrete per Section 03055 or 03056.

B. Prestressing Steel
   1. Grade 270 Low Relaxation Strand, 0.375 inch diameter per AASHTO M 203.

C. Reinforcing Steel
   1. Use coated or corrosion-resistant reinforcing steel per Section 03211.

D. Miscellaneous Steel Items
   1. Galvanize all miscellaneous steel items permanently cast into structural concrete elements. Refer to AASHTO M 111.

2.2 FABRICATION

A. Use a Department Certified Concrete Precaster or a pre-qualified project site caster for concrete products according to the Department Quality Management Plan: Precast-Prestressed Concrete Structures.

B. Do not place concrete in the forms until the Engineer has inspected and approved the placement of all materials in the deck panels.

C. Construct panels to tolerances shown on the plans or in the specifications.

D. Perform pre-stressing according to Section 03412.

E. Permanently mark each precast unit with date of casting and supplier identification. Stamp markings in fresh concrete.

F. Maintain a minimum compressive strength of 500 psi before stripping the form.

G. Wet cure the deck panels for 14 consecutive days before placing on the superstructure. Begin cure immediately after performing the final finish.
   1. Wet cure panels by covering all exposed surfaces with wet burlap, cotton mats, or both and plastic sheets.
   2. Keep the burlap and cotton saturated throughout the wet cure.
   3. The wet cure may be reduced to 7 days at a 10 percent pay disincentive.

2.3 QUALITY ASSURANCE

A. Precast Concrete Deck Panels
   1. Prevent cracking or damage during handling and storage of precast units.

2. Defects and Breakage of Prestressed and Non-stressed Elements
   a. Elements that sustain damage or surface defects during fabrication, handling, storage, hauling, or erection are subject to review and rejection.
   b. Write proposed repair procedures and obtain approval before performing repairs.
   c. Repair work must reestablish the element's structural integrity, durability, and aesthetics to the satisfaction of the Engineer.
   d. Determine the cause of any damage and take corrective action.
   e. Failure to take corrective action leading to similar repetitive damage is cause for rejection of the damaged elements.
   f. Cracks that extend to the nearest reinforcement plane and fine surface cracks that do not extend to the nearest reinforcement plane but are numerous or extensive are subject to review and rejection.
   g. Full depth cracking and breakage greater than 12 inches long are cause for rejection.
3. Document all test results. The quality control file will contain at least the following information:
   a. Element identification
   b. Date and time of cast
   c. Concrete cylinder test results
   d. Quantity of used concrete and the batch printout
   e. Form-stripping date and repairs if applicable
   f. Location/number of blockouts and lifting inserts
   g. Temperature and moisture of curing period
   h. Lifting device details, requirements, and inserts

PART 3 EXECUTION

3.1 EXECUTION

A. Refer to Section 03412.

B. Place Precast Concrete Deck Panels
   1. Fully brace concrete girders or steel girders before placing panels.
   2. Place the precast concrete deck panels as shown on the plans.

END OF SECTION

October 24, 2016

PROJECT # S-I15-1(113)5
PIN # 12780

SECTION 03372S

THIN BONDED POLYMER OVERLAY

Delete Section 03372 and replace with the following:

PART 1 GENERAL

1.1 SECTION INCLUDES

A. Thin bonded polymer overlay system applied to concrete bridge decks and approach slabs.

B. Removal of existing polymer overlay from concrete bridge decks and approach slabs.

C. Repair of damaged areas of a polymer overlay system.

1.2 RELATED SECTIONS

A. Section 03934: Structural Pothole Patching

1.3 REFERENCES

A. ASTM C 25: Chemical Analysis of Limestone, Quicklime, and Hydrated Lime

B. ASTM C 88: Soundness of Aggregates by Use of Sodium Sulfate or Magnesium Sulfate

C. ASTM C 131: Resistance to Degradation of Small-Size Coarse Aggregate by Abrasion and Impact in the Los Angeles Machine

D. ASTM C 566: Total Evaporable Moisture Content of Aggregate by Drying

E. ASTM C 579: Compressive Strength of Chemical-Resistant Mortars, Grouts, Monolithic Surfacings, and Polymer Concretes

F. ASTM C 881: Epoxy-Resin-Base Bonding Systems for Concrete

G. ASTM D 570: Water Absorption of Plastics

H. ASTM D 638: Tensile Properties of Plastics

I. ASTM D 790: Flexural Properties of Unreinforced and Reinforced Plastics and Electrical Insulating Materials

J. ASTM D 2240: Rubber Property – Durometer Hardness

K. ASTM D 4285: Indicating Oil or Water in Compressed Air

L. ASTM D 4580: Measuring Delaminations in Concrete Bridge Decks by Sounding

M. ASTM D 5821: Determining the Percentage of Fractured Particles in Coarse Aggregate

N. ASTM D 6928: Resistance of Coarse Aggregate to Degradation by Abrasion in the Micro-Deval Apparatus

O. ASTM E 274: Skid Resistance of Paved Surfaces Using a Full-Scale Tire

P. American Concrete Institute (ACI)

Q. International Concrete Repair Institute (ICRI)

1.4 DEFINITIONS

A. Polymer Overlay System – A thin bonded polymer overlay applied as a wearing surface consisting of a two-part polymer resin broadcasted with aggregate to refusal before it cures.

B. Installer – The entity preparing the surface and installing and finishing the polymer overlay system.

C. Provider – The manufacturer furnishing the polymer overlay system.

1.5 SUBMITTALS

A. Provider Qualifications for review at least 10 calendar days before ordering material.
   1. Include at least the following:
      a. Company name.
      b. Name and phone number of the Provider's Technical Support Representative.
      c. List of projects using the submitted products with at least two

years of satisfactory performance under similar environmental conditions as the project in which it is to be applied. Refer to this Section, Article 1.6 B. List the following for each project:

1) Project name
2) Bridge locations (state routes and bridge identifiers)
3) Scope of work
4) Products used
5) Approximate date of the system opening to traffic.

B. Materials

1. The following information at least 10 calendar days before ordering material:
   a. Manufacturer's Product Data Sheets and recommended installation instructions.
   b. Material Safety Data Sheets.
   c. The Provider's certification stating that the provider is the sole provider of the components of the polymer overlay system and that the components are:
      1) In accordance with this Section.
      2) Fully compatible with one another.
   d. The Installer's certification with the Provider's written concurrence that the polymer overlay system is fully compatible with all deck repair materials.
   e. Certified Test Report from an independent nationally recognized laboratory stating that the polymer resins in the polymer overlay system components meet the requirements in this Section.
      1) Test results must be from within a three year period of the submittal.
   f. Certified Test Report from an AASHTO accredited testing laboratory confirming the compliance of the aggregate material with the test requirements of this Section.
      1) Test results must be from within a one year period of the submittal.

C. Method for mixing of the polymer resins

1. The Provider's written concurrence that the selected mixing method is acceptable and compatible with the polymer overlay system.
2. Mixing ratio of the polymer resins.

D. A warranty letter to the Engineer and the Department Bridge Management Engineer stating that the Contractor guarantees the polymer overlay system against material and installation defects incurred under traffic for a period of 5 years.

1. The guarantee period starts on the date of Physical Completion.

2. Include in the letter:
    a. State Project Designation
    b. State Project Name
    c. State Structure Numbers
    d. Contractor, Provider, and Installer Name
3. Defects (performance failures) include:
    a. Spalling: Broken or missing pieces of polymer overlay system.
    b. Scaling: Visible, exposed, rough surface texture resulting from a loss of aggregate or resin.
    c. Delamination: Visible or audible debonding of the polymer overlay system at the bond line (interface) with the existing bridge receiving surface.
    d. Cracking: Visible cracks not reflected from a crack in the existing deck.
    e. Loss of skid resistance: Skid resistance less than 40 as measured according to ASTM E 274.
4. The guarantee covers 100 percent of the polymer overlay system materials and installation costs applied during this project.
5. Removal and replacement of the polymer overlay system for failed sections.
6. The Department will notify the Contractor of defects to be repaired during the guarantee period.
    a. Submit detailed plans and procedures of corrective work according to Provider's recommendations and obtain the Department's authorization before commencing work.
    b. Perform corrective work within 60 days of notification.

1.6 QUALITY CONTROL

A. Technical Support Representative
1. Provide a Technical Support Representative from the Provider onsite during surface preparation and application of the polymer overlay system on the first day the polymer overlay system is installed on a structure.
    a. The Technical Support Representative must have a minimum of 3 years of experience with the system and with guiding and assisting installers in the polymer overlay system installation.
    b. The Technical Support Representative will instruct the workers in proper mixing, application technique, safety precautions, traffic opening time, and environmental requirements.
    c. The Technical Support Representative must be available for consultation but not necessarily present at the job site for the remaining work.

2. The Department reserves the right to require the Technical Support Representative to be onsite if at any time the Engineer is concerned with the product installation quality.

B. Prior Performance

1. The selected polymer overlay system must have at least two years of satisfactory performance for non-interstate use and four years of satisfactory performance for interstate use in similar environmental conditions as the project in which it will be applied.
2. Products without the required years of prior satisfactory performance will only be considered for use with approval.
   a. Do not use for bidding purposes.

PART 2 PRODUCTS

2.1 POLYMER OVERLAY SYSTEM

A. Use a thin bonded polymer overlay system that chemically cures to provide an impervious wearing surface consisting of the following:

1. Penetrating Crack Filler
2. Polymer Resin
3. Broadcast Aggregate

B. Penetrating Crack Filler

1. Provide a penetrating crack filler as required by the Provider.

C. Polymer Resin

1. Two-part Epoxy-Urethane Co-Polymer (Type 1) that meets the requirements of Table 1.
2. Free of fillers, volatile solvents, and external/conventional flexibilizers.

Table 1

PHYSICAL PROPERTIES OF THE CURED POLYMER RESIN		
Property	**Value**	**Method**
Compressive Strength, min. psi	5,000	ASTM C 579
Tensile Strength, min. psi	2,000	ASTM D 638
Tensile Elongation, min. percent	30-80	ASTM D 638
Water Absorption, max. percent by wt.	1.0	ASTM D 570
Shore D Hardness, min. 77°F	60-75	ASTM D 2240
Gel Time, minutes	15-45	ASTM C 881
Adhesion to Concrete	100% failure in concrete	ACI-503-R, Pull Out Test
Flexural Yield Strength, min. psi	3,000	ASTM D 790
Percent Solids	100	

D. Broadcast Aggregate

1. Thoroughly washed and kiln dried to maximum moisture content of 0.2 percent by weight according to ASTM C 566.
2. Use aggregate with the properties shown in Table 2 with aggregate gradation according to the requirements in Table 3, or use aggregate with the properties shown in Table 4 with aggregate gradation according to the requirements in Table 5.

Table 2

BASALT OR FLINT AGGREGATE PROPERTIES	
Soundness, ASTM C 88	3.0 max
LA Abrasion, Grade D, ASTM C 131	20.0% max.
Micro Deval Abrasion, ASTM D 6928	10.0% max.
Mohs Scale Hardness	7.0 min.

Table 3

BASALT OR FLINT AGGREGATE GRADATION	
Sieve Size	**Percent Passing**
0.187 inch; No.4	100
0.078 inch; No.10*	10 – 35
0.033 inch; No.20	0 – 10
* 100 percent of the aggregate has at least one mechanically fractured face for materials being retained on the #10 sieve according to ASTM D 5821.	

Table 4

CALCINED BAUXITE AGGREGATE PROPERTIES	
Soundness, ASTM C 88	3.0 max
LA Abrasion, Grade D, ASTM C 131	20.0% max.
Micro Deval Abrasion, ASTM D 6928	5.0% max.
Mohs Scale Hardness	8.0 min.
Aluminum Oxide, ASTM C 25	87.0% min.

Table 5

CALCINED BAUXITE AGGREGATE GRADATION	
Sieve Size	**Percent Passing**
0.187 inch; No.4	100
0.132 inch; No.6	95 - 100
0.046 inch; No.16*	0 - 5
* 100% of the aggregate has at least one mechanically fractured face for materials being retained on the #16 sieve according to ASTM D 5821.	

2.2 EQUIPMENT

A. Polymer Overlay Removal
   1. Use a diamond tipped grinder or approved method to remove an existing polymer overlay system from the deck.

B. Metered Mixing
   1. Use equipment capable of metering, mixing, and distributing the polymer resin.
      a. Use equipment that features positive displacement volumetric metering pumps controlled by a hydraulic power unit.
      b. Use motionless, in-line mixing.
   2. Use equipment that is approved by the Provider.

C. Hand Mixing
   1. Use equipment that is approved by the Provider.

D. Broadcasting Aggregate
   1. Use mechanical equipment capable of dispensing the aggregate onto the deck in a uniform manner as required by the Provider.

PART 3 EXECUTION

3.1 STORAGE AND HANDLING

A. Polymer Resin
   1. Identify the containers as Part A and Part B and plainly mark with:
      a. Manufacturer's name
      b. Manufacturer's address
      c. Name of the product
      d. Mixing proportions and instructions
      e. Lot and batch numbers
      f. Date of manufacture
      g. Quantity
   2. Transport to and store on the job site in a dry, weather protected environment away from moisture, and within the maintained temperature range of 60 to 100 degrees F and according to Provider's recommended installation instructions.

B. Broadcast Aggregate
   1. Store aggregate in a clean, dry location, protected from rain and other moisture sources.
   2. Protect the aggregate from contaminants on the job site.

C. Handling Liquid Materials
   1. Use protective gloves, clothing, boots, and goggles when directly exposed to the material.
   2. Provide manufacturer's safety data sheets to workers and inspectors.

3.2 POLYMER OVERLAY REMOVAL

A. Remove the existing polymer overlay as shown or as required by the Engineer.
   1. Do not damage approach slab, sleeper slab, or underlying rebar when removing polymer overlay.

3.3 SURFACE PREPARATION

A. Surface Defects
   1. Repair deck surface defects before installing the polymer overlay system.
      a. Use a concrete repair material that meets Provider's recommendations and is compatible with the polymer overlay system being used.
      b. Use concrete repair materials free of magnesium phosphate.

B. Shot-Blasting
   1. Clean the entire concrete deck surface with steel shot blast to remove oil, dirt, rubber, and other materials that may be detrimental to the polymer overlay bonding and curing according to the Provider's recommendations.
      a. Use sandblasting equipment or mechanical grinders only in areas that cannot be reached with steel shot-blasting.
         1) Sandblast or grind before shot-blasting. Refer to ASTM D 4285.
   2. Produce a surface relief that meets the International Concrete Repair Institute (ICRI) Surface Preparation CSP 5-7.

C. Traffic
   1. Do not allow traffic on the deck that has been shot-blasted.
   2. Only allow the polymer overlay system equipment on cleaned surfaces.

3.4 APPLICATION

A. Concrete Surface
   1. Complete deck repairs and surface preparation before applying the polymer overlay system.

2. Clean the concrete surface and apply a penetrating crack filler as required by the Provider.
3. Do not apply the polymer overlay system when it has rained within 24 hours or is expected to rain within 8 hours of application.
4. Verify the moisture content in the concrete substrate does not exceed 4.0 percent when measured by an electronic meter.
5. Apply the polymer overlay system only when the deck and ambient air temperature is a minimum 50 degrees F and rising.
6. Verify that treated surfaces are dry at the time of second application.

B. Mixing
1. Measure and mix the polymer resin components as recommended by the Provider.
   a. Maintain mix ratios according to the Provider's recommendations.
2. Mix polymer resin immediately before dispensing.
3. Verify the mix ratio by volumetric sampling at the beginning of the application, mid operation, and at the end of the application of each layer.
   a. Use containers with graduated markings with not less than 5 gallon capacity.
   b. Remove the static mixer and dispense each component into separate containers.
      1) Dispense at least five gallons of the primary component for ratio comparison.
      2) Uncontaminated samples may be returned to the reservoirs they were originally dispensed from.
   c. The Engineer or Technical Support Representative may request additional sampling.

C. First and Second Layers of Overlay
1. Evenly distribute the polymer resin on the clean, dry deck surface at the rate recommended by the Provider.
   a. Use new notched squeegees, $^{3}/_{16}$ inch minimum, on the first lift of every application to verify sufficient thickness of the overlay.

D. Overlay Thickness
1. Provide the number of layers and application rates of the liquid in each layer according to the Provider's recommendations.
2. Provide a total overlay thickness of at least 3/8 inch.

E. Time Limits for Broadcast Aggregate

1. Use the following maximum time allowed after application of liquid before broadcasting the aggregate in Table 6 unless directed otherwise by the Provider.

Table 6

Time Limits	
Temperature	**Maximum Time**
Above 90°F	10 minutes
80°F to 90°F	15 minutes
70°F to 80°F	20 minutes
60°F to 70°F	25 minutes
50°F to 60°F	35 minutes

F. Broadcasting Aggregate
   1. Broadcast the aggregate before the polymer begins to gel.
      a. Cover the surface until no wet spots remain.
   2. Drop the aggregate vertically so the level of the liquid is not disturbed.

G. Remove Excess Aggregate
   1. Completely remove excess and loose aggregate after the overlay has hardened by vacuum or with compressed air before applying subsequent layers according to the Providers recommendations. Refer to ASTM D 4285.
   2. Aggregate may be reused for subsequent lifts if it is removed directly into containers, screened to required gradation, and stored free of contaminants.

H. Longitudinal Joints in the Overlay
   1. Stagger and overlap joints between successive layers 6 to 12 inches so that no ridges appear between two adjacent lanes.
   2. Maintain straight construction joints between adjacent placements and lifts.

I. Traffic
   1. Do not allow vehicles on the polymer overlay while it is curing.
   2. Allow traffic on the final layer or in between layers after the resin has cured, as determined by the Provider, and after removal of excess and loose aggregate.
      a. Brush blast the surface with shot blast according to the Provider’s recommendations before applying additional layers when traffic has been allowed on the cured surface between layers.

J. Work performed contrary to the Technical Support Representatives instructions will be deemed non-conforming.

3.5 LIMITATIONS

A. New Bridge Decks and Approach Slabs
   1. Cure newly placed concrete for at least 28 calendar days before beginning installation of polymer overlay system.

B. Bridges constructed offline and moved into their final location by self-propelled modular transporters (SPMT)
   1. Apply the polymer overlay system no sooner than 30 calendar days after setting the bridge in its final location.

C. Prevent material and debris from falling into streams, pedestrian areas, live traffic, or railroad tracks.

3.6 POLYMER OVERLAY REPAIR

A. Locate and mark visible polymer overlay repair areas in the presence of the Engineer.
   1. Sound the polymer overlay around repair area for delamination of the polymer overlay to determine repair limits.
   2. Square off the edges of polymer overlay system repair area six inches beyond the determined limits and parallel to the travel lane.
   3. Sawcut the perimeter of polymer overlay system repair area with a 1/2” deep sawcut.

B. Remove existing polymer overlay within the repair area according to this Section, Article 3.2.
   1. Sound the concrete deck in the repair area for delamination of the concrete deck to determine the need for structural pothole patching. Refer to ASTM D 4580 and Section 03934.

C. Prepare the deck surface within the repair area according to this Section, Article 3.3.
   1. Do not substitute sandblasting or mechanical grinding where shot blasting is required.

D. Apply the polymer overlay system within the repair area according to this Section.

END OF SECTION

September 5, 2016

SPECIAL PROVISION

PROJECT # S-I15-1(113)5
PIN # 12780

SECTION 03373S

POLYESTER CONCRETE OVERLAY

Add Section 03373:

PART 1 GENERAL

1.1 SECTION INCLUDES

A. Materials and procedures for the placement of a bridge deck overlay system consisting of high molecular weight methacrylate (HMWM) resin primer and polyester concrete.

B. Procedures for preparation of all receiving surfaces, which includes concrete deck, approach slabs and additional areas as shown in the plans.

C. Materials and procedures for the placement of an abrasive sand finish on the polyester concrete overlay system.

1.2 RELATED SECTIONS

A. Section 03310: Structural Concrete

B. Section 03934: Structural Pothole Patching

1.3 REFERENCES

A. AASHTO T 27: Sieve Analysis of Fine and Coarse Aggregates

B. AASHTO T 84: Specific Gravity and Absorption of Fine Aggregate

C. AASHTO T 85: Specific Gravity and Absorption of Coarse Aggregate

D. AASHTO T 242: Frictional Properties of Paved Surfaces Using a Full-Scale Tire

E. AASHTO T 255: Total Evaporable Moisture Content of Aggregate by Drying

F. AASHTO T 335: Determining the Percentage of Fracture in Coarse Aggregate

G. ASTM C 266: Time of Setting of Hydraulic-Cement Paste by Gillmore Needles

H. ASTM C 469: Static Modulus of Elasticity and Poisson's Ratio of Concrete in Compression

I. ASTM C 1583: Tensile Strength of Concrete Surfaces and the Bond Strength or Tensile Strength of Concrete Repair and Overlay Materials by Direct Tension (Pull-off Method)

J. ASTM D 323: Vapor Pressure of Petroleum Products (Reid Method)

K. ASTM D 618: Conditioning Practices for Testing

L. ASTM D 638: Tensile Properties of Plastics

M. ASTM D 1475: Density of Liquid Coatings, Inks, and Related Products

N. ASTM D 2196: Rheological Properties of Non-Newtonian Materials by Rotational (Brookfield type) Viscometer

O. ASTM D 2369: Volatile Content of Coatings

P. ASTM D 3278: Flash Point of Liquids by Small Scale Closed-Cup Apparatus

Q. ASTM D 4285: Indicating Oil or Water in Compressed Air

R. California Test (CT) 109: Method for Testing of Material Production Plants

S. California Test (CT) 550: Method for Determining the Surface Abrasion Resistance of Concrete Specimens

T. California Test (CT) 551: Determining Suitability of Materials for Overlayment and Repair of Portland Cement Concrete Pavement and Structures

1.4 DEFINITIONS

A. Primer – A substance applied as a preparatory coat to the receiving surface. The primer bonds the polyester concrete to the receiving surface.

B. Polyester Concrete – A type of concrete that uses polyester polymer resin in place of cement as a binder.

C. Overlay – A polyester concrete overlay system consisting of a primer, polyester concrete, and abrasive sand finish. Components of the system must be compatible with one another and the receiving surface. It is used to protect concrete surfaces from deterioration by providing an improved wearing surface. It can also be used as pothole patching material and for grade corrections (to improve ride of uneven surfaces by varying the thickness and thereby providing a smooth riding surface).

D. Provider – The manufacturer furnishing the polyester concrete overlay system.

E. Installer – The Contractor or subcontractor preparing all receiving surfaces and installing and finishing the polyester concrete overlay system.

F. Working Drawings – Drawings produced by the Contractor that supplement the contract drawings to provide information not included in the contract documents but required for installation as specified in the plans. Working drawings do not supersede the contract drawings.

G. Approval of Working Drawings – Acceptance by the Department for use on the project. The Department will review working drawings for general conformance with the design concept and compliance with the contract documents. Review and approval do not relieve the Contractor from responsibility for errors, correctness of details, conformance to the contract, and the successful completion of the work.

1.5 SUBMITTALS

A. Provider Qualifications for approval at least 10 days before ordering any material. Include the following:
   1. The company name.
   2. The name, phone number, and documented experience of the Provider's Technical Support Representative.
      a. Technical Support Representative must have a minimum of 5 years of experience with the specified system and with guiding and assisting Installers in Overlay installation.
   3. List of at least 15 projects of similar size, scope, and climate conditions in which the Overlay from the Provider has been used with satisfactory performance in the last 10 years. For each project list the following:
      a. Project name, bridge locations (state routes, and bridge identifiers), owner, scope of work, and approximate date of project opening to traffic.
      b. The Overlay quantities, components, mix proportions, pothole patching quantities and material type, application methods and equipment used.

c. Two owner/agent references and their contact information (phone and email). Satisfactory references are those responsible for the oversight or inspection on the project.

B. Installer Qualifications for approval at least 10 days before ordering any material. Include the following:

1. List of at least 10 projects of similar size and scope in which the Installer has placed and finished cast-in-place bridge deck concrete or polyester concrete overlay to Department standards with satisfactory performance in the last 5 years. Thin bonded polymer overlay installations do not qualify. For each project list the following:
   a. Project name, bridge locations (state, routes, and bridge identifiers), owner, scope of work, and approximate date of project opening to traffic.
   b. The name of installed system (cast-in-place concrete deck or polyester concrete overlay system), deck or overlay quantities, pothole patching material type and quantities, application methods and equipment used.
   c. Two owner/agent references and their contact information (phone and email). Satisfactory references are those responsible for the oversight or inspection on the project.

C. Working Drawings for approval.

1. Detailed drawings for approval of all grinding, temporary form construction, and installation. Include the following:
   a. A layout showing all phases and sequence of Overlay installation that is compatible with traffic phasing.
   b. Finished grade elevations at a maximum of 5 ft. interval along the longitudinal edges of each phase of overlay placement based on information provided in plans.
   c. Procedures and details of varying the depth of temporary form that is used to form the longitudinal edges of phases.
   d. Procedures and details of locating areas for grinding and methods for controlling and smoothly varying grinding depths when grinding of receiving surfaces is specified in the plans.
2. Submit drawings electronically in PDF format and as specified in plans. Use 11 x 17 inch sheets with a 1½ inch blank margin on the left edge. Place the following information in the title block in the lower right corner of each sheet:
   a. State Project Designation
   b. State Project Name
   c. State Structure Number
   d. Contractor, Provider, and Installer Name
   e. Contractor, Provider, or Installer Drawing Number
   f. Contractor, Provider, or Installer Sheet Number

3. Revise and resubmit drawings when directed by the Department.
4. Allow the Engineer 14 calendar days to review and approve working drawings.
    a. The Engineer may grant an increase in the number of working days for the project when that time is exceeded.
    b. This review period applies each time the drawings are submitted.
5. Do not deviate from the approved drawings unless authorized in writing by the Engineer. Assume the responsibility for costs incurred due to faulty detailing or planning.

D. Materials
1. Submit the following for approval at least 10 days before ordering any material:
    a. Product Data Sheets including recommended installation instructions for all Overlay components.
    b. Material Safety Data Sheets for all Overlay components.
    c. The Provider's certification stating that the provider is the sole provider of all components of the polyester concrete overlay system and that all components are:
        1) In accordance with this Section.
        2) Fully compatible with one another.
    d. The Installer’s certification with the Provider’s written concurrence that the polyester concrete overlay system is fully compatible with all proposed pothole patching materials.
2. Representative samples of material for all components of the overlay system at the request of the Engineer.
    a. 1 gal each, of primer and binder.
    b. Catalysts, promoters and other additives in quantity that is equivalent to amount used in 1 gal of primer or binder, as applicable.
    c. 5 lb of each dry component.
3. Certificate of Compliance for all polyester concrete overlay system components (primer, resin binder, aggregate, and sand). Certificate of Compliance must be accompanied by test results from an independent nationally recognized laboratory as defined in this Section.

E. A warranty letter to the Engineer and the Department Bridge Management Engineer stating that the Contractor guarantees the polyester concrete overlay system against all material and installation defects incurred during normal traffic for a period of 5 years.
1. The guarantee period starts on the date of Substantial Completion.
2. Include in the letter:
    a. State Project Designation
    b. State Project Name

c. State Structure Numbers
d. Contractor, Provider, and Installer Name

3. Defects (performance failures) include:
   a. Spalling: Broken or missing pieces of Overlay due to material degradation.
   b. Scaling: Visible, exposed, rough surface texture resulting from a loss of aggregate or resin.
   c. Delamination: Visible or audible debonding of the Overlay at the bond line (interface) with the existing bridge receiving surface.
   d. Cracking: Any visible crack not reflected from a crack in the existing deck.
   e. Loss of skid resistance: Skid resistance less than 40 as measured according to AASHTO T 242.
4. The guarantee covers 100 percent of the polyester concrete overlay system materials and installation costs.
5. Contractor is responsible for quality control of the proper placement of the materials and all other factors that affect the service life of the materials.
6. Contractor removes and replaces 100 percent of the polyester concrete overlay system for all failed sections at no cost to the Department in the event of a performance failure as stated above.

F. A public safety plan for approval at least 10 days before beginning overlay placement. The public safety plan must include details for:
   1. All materials, equipment, and methods to be used.
   2. All potential health and safety risks.
   3. Precautions that will be taken by personnel performing or inspecting the work.

G. An overlay placement plan for approval at least 10 days before beginning overlay placement. The overlay placement plan must include:
   1. Schedule of overlay work and testing for each bridge.
   2. Description and materials for cleaning and preparing the bridge deck.
   3. Description of equipment for applying HMWM resin primer.
   4. Description of equipment for measuring, mixing, placing, and finishing overlay.
   5. Method for isolating expansion joints and protecting deck and approach slab drains.
   6. Cure time for polyester concrete.
   7. Storage and handling of HMWM resin and polyester concrete.
   8. Disposal of excess HMWM resin, polyester concrete, and containers.

1.6 POLYESTER CONCRETE OVERLAY SYSTEM PROVIDER SERVICE REQUIREMENT

A. The Provider's Technical Representative must:
   1. Provide technical support and training to the Installer and Department regarding handling, storage, production, and placement.
   2. Attend the preconstruction meeting.
   3. Be present at all times during the overlay application, including the Test Section and pothole patching with polyester concrete.
   4. Instruct the Installer, Contractor and the Engineer of anything that could adversely affect the performance of the Overlay.

PART 2 PRODUCTS

2.1 PRIMER

A. Use a HMWM resin system which consists of a resin, promoter, and initiator. HMWM resin system must:
   1. Be tested and certified within the one year period before Overlay installation. Do not use resin primer from containers that have been unsealed for one year or longer.
   2. Be low odor and wax-free.
   3. Comply with the properties listed in Table 1.

Table 1

Primer		
Property	**Test Method**	**Requirement**
Volatile Content *	ASTM D 2369	30%, maximum
Viscosity *	ASTM D 2196	25 cP, maximum, (Brookfield RVT with UL adaptor, 50 RPM at 77°F)
Specific Gravity *	ASTM D 1475	0.90 minimum, at 77°F
Flash Point *	ASTM D 3278	180°F, minimum
Vapor Pressure*	ASTM D 323	0.039 in Hg, maximum, at 77°F
PCC Saturated Surface-Dry Bond Strength	CT 551, Part 5**	750 psi, minimum at 24 hours and 70 ± 1°F
* Test must be performed before adding initiator. ** CT 551 specifications is available from the Engineer		

2.2 POLYESTER CONCRETE

A. Polyester concrete mix consists of a polyester resin binder and aggregate.
   1. Proportion the polyester concrete mix such that the resin binder weight is 12 (±1) percent of the weight of the dry aggregate.
   2. Polyester concrete must have an initial set time of at least 30 minutes and at most 120 minutes when tested using an initial-setting time Gillmore needle under ASTM C 266.

B. Polyester resin binder must:
   1. Be tested and certified for each lot.
   2. Be an unsaturated isophthalic polyester-styrene co-polymer.
   3. Contain at least 1 percent by weight gamma-methacryloxypropyltrimethoxysilane, an organosilane ester silane coupler.
   4. Be used with a promoter compatible with suitable methyl ethyl ketone peroxide and cumene hydroperoxide initiators.
   5. Comply with the material properties listed in Table 2.

Table 2

Polyester Resin Binder Properties		
Property	**Test Method**	**Requirement**
Viscosity *	ASTM D 2196	75 to 200 cP (RVT, No. 1 Spindle, 20 RPM at 77°F)
Specific Gravity *	ASTM D 1475	1.05 to 1.10 at 77°F
Elongation	ASTM D 638	35%, minimum Type I at 0.45 inch/min. Thickness = 0.25 ± 0.04 inch
	ASTM D 618	Sample Conditioning: 18/25/50 + 5/70
Tensile Strength	ASTM D 638	2500 psi, minimum Type I at 0.45 inch/min. Thickness = 0.25 ± 0.04 inch
	ASTM D 618	Sample Conditioning: 18/25/50 + 5/70
Styrene Content *	ASTM D 2369	40% to 50% by weight
*Test must be performed before adding Initiator.		

C. Aggregate for polyester concrete must:
   1. Be tested and certified within the one year period preceding the Overlay installation.
   2. Have fine aggregate (aggregate passing the No. 8 sieve) consisting of natural sand only.

3. Meet the aggregate properties in Table 3.
4. Meet the aggregate gradation in Table 4.

Table 3

Aggregate Properties		
Property	**Test Method**	**Requirement**
Fractured Face	AASHTO T 335	45% max. (for particles retained on the No. 8 sieve)
Weighted Average Aggregate Absorption	AASHTO T 84 and T 85	< 1%
Moisture Content at time of mixing with the Resin	AASHTO T 255	≤ ½ of Weighted Average Aggregate Absorption

Table 4

Aggregate Gradation	
Sieve Size	**Percentage Passing (by weight)**
	⅜" Maximum
⅜ inch	100
No. 4	62-85
No. 8	45-67
No. 16	29-50
No. 30	16-36
No. 50	5-20
No. 100	0-7
No. 200	0-3

2.3 SAND

A. Sand for abrasive sand finish must:
   1. Be tested and certified within the two year period prior to Overlay placement.
   2. Be commercial quality blast sand supplied by Provider.
   3. Have at least 95 percent pass the No. 8 sieve and at most 5 percent pass the No. 20 sieve when tested. Refer to AASHTO T 27.

4. Have an average absorption of at most 1 percent. Refer to AASHTO T 84 and 85.

2.4 POLYESTER CONCRETE OVERLAY SYSTEM

A. Obtain primer, polyester concrete, and sand from a single source provider with experience supplying and servicing projects of similar size and scope.

B. Deliver all materials in their original containers bearing the Provider's label specifying manufacture date, lot number, trade name, and quantity.

C. Overlay composite properties must:
   1. Be tested and certified within the two year period before Overlay placement.
   2. Comply with the properties listed in Table 5.

Table 5

Polyester Concrete Overlay System Properties		
Property	**Test Method**	**Requirement**
PCC Saturated Surface Dry Bond Strength	CT 551	500 psi minimum at 24 hrs and 70 degrees F (without primer, at 12% resin content by weight of the dry aggregate, on Saturated Surface Dry Specimen)
Abrasion Resistance	CT 550	<2g weight loss (at 12% resin content by weight of the dry aggregate)
Modulus of Elasticity	ASTM C 469	1,000 ksi to 1,500 ksi (at 12% resin content by weight of the dry aggregate)

PART 3 EXECUTION

3.1 OVERLAY TEST SECTION

A. Complete a test section before starting work. The test section must:
   1. Measure at least 72 ft^2 and be of similar thickness as the project overlay. Width of test section must match maximum width proposed in overlay placement plan unless otherwise approved by Engineer.
   2. Be constructed on a previously cast and cured concrete surface.
   3. Be placed within the project limits at a location approved by Engineer.
   4. Be constructed using the same equipment as the production work.
   5. Replicate field conditions and preparation of receiving surface and installation procedures of the production work.

6. Demonstrate the effectiveness of the mixing, placing, and finishing equipment as well as the curing method.
7. Determine the initial polyester concrete set time. The set time is determined when the in-place polyester concrete cannot be deformed by pressing with a finger, indicating that the resin binder is no longer in a liquid state.
8. Test minimum bond strength according to ASTM C 1583 after 24 hours. Bond strength must be at least 250 psi and failure must be in the substrate to demonstrate that the overlay adheres to the prepared surface.

B. Notify the Engineer 10 days before placing test section. Place test section in the presence of the Engineer. The Contractor's means and methods and the Installer's workmanship will be evaluated for conformance with this Section.

C. Complete an additional test section if the test section is not approved. Provide written modifications to overlay placement plan which remedy the issues and failures noted by Engineer from the first test section before proceeding with the additional test section.

D. The Department will find the Installer unqualified after two unapproved or failed test sections per project.

E. Remove and dispose of all material used in the test section, unless directed otherwise by the Engineer. Disposed material is the property of the Contractor.

F. Allow minimum of 48 hours for acceptance of each test section by Engineer.

G. Do not proceed with Overlay work before receiving the Engineer's approval of the test section.

3.2 LINE AND GRADE CONTROL OF VARIABLE DEPTH OVERLAYS

A. Based on approved working drawings:
1. Survey and mark the location of longitudinal edges of each phase.
2. Survey and mark the finished grade elevations along the longitudinal edges of each phase at locations shown on approved working drawings.
3. Survey and mark the location and required depths of areas for grinding, where minimum overlay thickness specified in plans is not met.
4. Limit deviations in the overlay surface to ⅛ inch and deviations in the location of longitudinal edges of each phase to 1 inch from the

elevations and locations shown on approved working drawings respectively.

B. Temporary forms for longitudinal edges of phased overlay placement
   1. Place forms at longitudinal edges marked according to this Section, article 3.2, paragraph A.1.
   2. Vary the depth of forms, such that the top surface is a smooth profile (which matches the top of overlay at the edges of each phase) matching the finished grade elevations as marked according to this Section, article 3.2, paragraph A.2.
   3. Keep forms free from warps, bends and kinks.
   4. Do not provide any gap between forms and top of receiving surface for polyester concrete to leak through. Tightly join adjacent form sections.
   5. Stop Overlay installation if the side forms do not meet or hold line and grade.

C. Grinding
   1. Using the procedures and details shown on approved working drawings, profile grind the receiving surface to the required depths at the locations marked according to this Section, article 3.2, paragraph A.3.

D. Surface smoothness
   1. Limit transverse pavement deviations to less than ⅛ inch from the lower edge of a 10 ft straightedge.
   2. Limit profile (longitudinal parallel to traffic) pavement deviations to less than ⅛ inch from the lower edge of a 10 ft straightedge.

3.3 PREPARATION

A. Remove deteriorated concrete and repair the area with suitable patch material (compatible with the Overlay) before preparing the surface for the overlay according to Section 03934 with the following exceptions:
   1. Use polyester concrete for the patch material for potholes in concrete that are less than 1½ inch deep and where the reinforcement is not exposed.
      a. Prepare, mix, and install polyester concrete according to this Section.
      b. Strike off and finish patches so they are level with the existing surface.
   2. Do not use patching material that contains magnesium phosphate.
   3. Use patching material that has a minimum compressive strength of 3000 psi at 24 hours cure time.

B. New concrete surfaces must comply with Section 03310 before the start of overlay work.

C. Prepare the entire receiving surface to remove all materials that may be detrimental to the overlay bonding and curing according to the Provider's recommendations. Refer to ASTM D 4285.
   1. Remove existing thin bonded polymer overlay.
   2. Remove existing compression seal expansion joint material as needed for installation clearance of the new compression seal.
   3. Remove all loose disintegrated concrete, dirt, paint, oil, asphalt, rubber, laitance carbonation and curing materials from patches and other foreign material from the deck surface.
   4. Remove surface mortar and expose aggregates as required by the Provider.
   5. Protect metal deck drains and areas of the curb or railing above the proposed surface from the shot blast.
   6. Preparation must include shot blasting with steel shot.
   7. Use a vacuum truck or air compressor to remove dust and other loose materials. Do not use brooms.

D. Isolate expansion joints before placing the overlay. Saw cutting at bridge expansion joints is not allowed.

E. Comply with the Provider's recommendations for preparation if they exceed the requirements specified herein.

F. Protect deck and approach slab drains to prevent surface preparation and overlay materials from entering the drains.

G. Do not expose cleaned surfaces to vehicular or pedestrian traffic other than that required by the Overlay operation. Re-clean by shot blasting with steel shot to the satisfaction of the Engineer at no additional cost if the surface is contaminated before Overlay is placed.

H. All pothole patching and surface preparation operations will be inspected and approved before placing the Overlay.

3.4 MIXING

A. Use a continuous mixer to mix polyester concrete for total applications of over 80 yd^3. The continuous mixer must:
   1. Employ an auger screw/chute device.
   2. Be equipped with an automatic metering device that measures and records aggregate and resin volumes. Record volumes at least every 5 minutes, including time and date. Submit recorded volumes at the end of the work shift.

3. Have a visible readout gage that displays volumes of aggregate and resin being recorded.
4. Produce a satisfactory mix consistently during a demonstration.
5. Provide certification that equipment has been calibrated within 90 days by a CT 109 test (copies available from the Engineer) or a method approved by the Engineer.

B. Polyester concrete may be mixed in mechanical mixers, each of at most 9 ft^3 capacity, for total applications below 80 yd^3.

3.5 APPLICATION

A. Before beginning application
1. The receiving surface must be dry before placing the HMWM primer. Use dryers as necessary, to facilitate the timely placement of the Polyester Concrete Overlay System.
2. The receiving surface must be at least 50 degrees F and at most 100 degrees F.
3. Cure receiving concrete surfaces as follows:
   a. New structural concrete (excluding pothole patches) – 28 days minimum.
   b. New pothole patches:
      1) Using Polyester Concrete – Follow Overlay Provider's recommendations.
      2) Using other patch materials – Attain a minimum compressive strength of 3000 psi and follow patch material supplier's and Polyester Concrete provider's recommendations.
4. Clean the receiving surface once again by blowing with clean and dry compressed air 1 hour before applying the primer.
5. Extend all functional deck and approach slab joints through the overlay. Align joint edges of polyester concrete and receiving surface in single vertical plane. Seal working joints according to the details in the plans.

B. Primer
1. Thoroughly mix all components of HMWM resin primer.
2. Apply the HMWM resin primer to the receiving surface:
   a. Within five minutes of mixing.
   b. At 90 ft^2/gal or a rate recommended by the Provider.
   c. Uniformly spread to completely cover surfaces to be overlaid.

C. Polyester Concrete

1. Initiate the polyester resin binder and blend completely. Add aggregate, proportion binder content in polyester concrete according to this Section, article 2.2, paragraph A.1, and mix for at least 2 minutes when using a mechanical mixer.
2. Place the polyester concrete:
    a. After 15 minutes and up to 120 minutes from when the primer was applied.
    b. Before gelling or within 15 minutes of adding initiator, whichever occurs first. Discard polyester concrete not placed within this time.
3. Determine the initial polyester concrete set time in the field according to this Section, article 3.1, paragraph A.7. If the initial set does not meet the requirements defined in this Section, article 2.2, paragraph A.2, the material must be removed and replaced.
4. Consolidate and finish the overlay to the required grade and cross section using concrete paving and finishing equipment. Equipment must:
    a. Have grade control capabilities
    b. Use vibratory-type mechanical screed riding on preset forms/rails or through the use of a specialized paver modified for polyester concrete, having automated hydraulically controlled grade automation. Obtain Engineer's approval for alternative equipment.
    c. Strike off the Overlay to the established grade, cross section and depth shown on the plans.
        1) Keep a slight excess of polyester concrete in front of the cutting edge at all times.
5. Taper Overlay edges if the overlay is not completed within the allowable lane closure time and is more than ½ inch higher in elevation than the adjacent pavement.
    a. Taper edges transverse to the direction of traffic at a 20:1 (horizontal:vertical) slope or as specified by the Engineer.
    b. Taper edges longitudinal to the direction of traffic at a 4:1 (horizontal:vertical) slope or as specified by the Engineer.
    c. Tapers may remain and be overlaid with a subsequent overlay pass.

D. Sand

1. Apply a sand finish of at least 1.9 lb/yd^2 before gelling occurs. Apply until refusal, eliminating “glassy” or smooth areas.
2. Finish and tine polyester concrete according to Section 03310.

E. After sand finishing

1. Protect the Overlay from moisture for at least 4 hours after finishing.

2. Do not allow traffic or equipment on the overlay for at least 4 hours after final finishing unless otherwise approved by the Engineer.
3. Sound the entire overlay surface in a manner approved by and in the presence of the Engineer after the curing requirements are met to ensure total bond of the Overlay to the bridge deck.
    a. Remove and replace unbonded areas of polyester concrete at no additional expense to the Department.
4. Thoroughly fill and seal all cracks with HMWM resin, except those that are significant enough to require removal as determined by the Engineer.
    a. Apply two applications of HMWM resin to cracks 1/16 inch and greater in width.
    b. Coat the wetted surface with sand for abrasive finish immediately following the application of HMWM resin.
5. Remove any material found defective and replace with acceptable material at no additional cost to the Department.

F. Comply with the Provider’s recommendations for application if they exceed the requirements in this Section.

3.6 QUALITY CONTROL

A. Provider’s Representative may consult with the Engineer to suspend any item of work that is suspect and does not meet the requirements of this Section. Work may resume only after the Provider’s Representative and the Engineer are satisfied that the Installer has taken appropriate remedial action.

B. Take any additional steps required for the safety of the workers, the public and protecting the environment. This includes following all of the Provider's safety requirements. Verify that all subcontractors are following the Provider's safety regulations.

C. Remove and dispose of the loose/excess sand that has not properly bonded to the Overlay before opening to traffic.

END OF SECTION

Supplemental Specification
2012 Standard Specification Book

SECTION 03390

CONCRETE CURING

Delete Section 03390 in its entirety and replace with the following:

PART 1 GENERAL

1.1 SECTION INCLUDES

A. Concrete curing materials and methods.

B. This section does not apply to cast-in-place Portland Cement Concrete Pavement and Lean Concrete Base Course. Refer to Section 02752.

C. This section does not apply to dry cast precast concrete members, except for precast concrete box and three-sided culvert structures.

1.2 RELATED SECTIONS

A. Section 02752: Portland Cement Concrete Pavement

B. Section 03055: Portland Cement Concrete

C. Section 03310: Structural Concrete

1.3 REFERENCES

A. ASTM C 309: Liquid Membrane-Forming Compounds for Curing Concrete

B. ASTM C 1315: Liquid Membrane-Forming Compounds Having Special Properties for Curing and Sealing Concrete

C. UDOT Quality Management Plans

1.4 DEFINITIONS **Not Used**

1.5 SUBMITTALS

A. Manufacturer's product data, specifications, and recommended installation instructions.

PART 2 PRODUCTS

2.1 CURING COMPOUND

A. Refer to this Section, Part 3, Tables 1 and 2.

B. Limit Volatile Organic Compounds (VOC) content to 350 grams / liter maximum.

PART 3 EXECUTION

3.1 CURING MEASURES

A. Prevent drying of exposed concrete surfaces after placing concrete and until applying the selected curing method.
   1. Keep exposed concrete surfaces moist by fogging if the surfaces begin to dry before the selected curing method can be applied.

B. Cure all newly placed concrete to prevent loss of water by one or more of the following methods according to this Section.
   1. Forms-in-Place Method (FIPM)
      a. Cure formed surfaces of concrete by retaining the forms in place without loosening for the specified curing period.
      b. Complete the cure using one of the methods specified for the element when forms are removed before completing the specified curing period.
         1) Prevent drying of the exposed concrete surfaces while transitioning between curing methods.
   2. Water Method (WM)
      a. Keep concrete surfaces continuously wet by ponding, spraying, or covering with materials that are continuously and thoroughly wet.
         1) Acceptable materials for covering concrete surfaces include cotton mats, multiple layers of burlap, or other materials that retain water.
         2) Secure the cover materials to prevent wind or other forces from removing them.
         3) Keep the cover materials saturated throughout the curing period.
      b. Do not erode or damage the finish.
      c. Prevent excess water from impacting traffic on in-service roadways.

3. Liquid Membrane-Curing Compound Method (LMCCM)
    a. Thoroughly seal exposed concrete surfaces with a liquid membrane-curing compound immediately after finishing operations are completed for exposed concrete surfaces or immediately after forms are removed and necessary patching is complete when forms are removed before the end of the curing period.
    b. Apply liquid membrane-curing compound uniformly at the rates specified in Tables 1 and 2.
    c. Immediately repair damage to the curing compound film during the specified curing period by re-spraying.
4. Waterproof Cover Method (WCM)
    a. Exposed concrete surfaces must be wet before installing cover.
    b. Cover exposed concrete surfaces with a material that prevents moisture loss from the concrete.
        1) Do not use materials that have lost their waterproof qualities.
        2) Secure cover to prevent displacement by wind.
    c. Use this method only when the covering can be secured adequately to prevent moisture loss.
    d. Maintain the air temperature beneath the cover at not less than 50 degrees F.
        1) The use of insulated blankets is permitted.
5. Steam or Radiant-Heat Method (SRHM)
    a. Use only for precast concrete members manufactured in prequalified plants.
    b. Use a complete steam or radiant heat curing system that includes 24 hour temperature control and monitoring devices.
        1) Use temperature recording devices as necessary to verify that temperatures are uniform throughout the enclosure and within the limits specified.
    c. Steam Heat Curing System
        1) Use a suitable enclosure to contain live steam and minimize moisture and heat losses.
        2) Use low-pressure and saturated steam.
        3) Maintain 90 to 100 percent relative humidity in the curing enclosure.
        4) Do not apply heat directly on the concrete or cause localized high temperatures.
    d. Radiant Heat Curing System
        1) Apply heat by means of pipes circulating steam, hot oil, or hot water, or by electric heating elements.
        2) Use a suitable enclosure to contain the heat.

3) Minimize moisture loss by covering exposed concrete surfaces with plastic sheeting.

e. Waiting Period

1) Do not apply the initial application of heat before the initial set of the concrete except to maintain the minimum temperature within the curing enclosure.

2) Maintain the temperature within the curing enclosure at not less than 50 degrees F. Live steam or radiant heat may be used to maintain the curing enclosure at the proper minimum temperature. Keep the concrete wet during this period.

f. Curing Period

1) Increase the temperature within the concrete during the initial application of heat at an average rate not to exceed 40 degrees F per hour until the curing temperature is reached.

2) Do not exceed a concrete temperature of 160 degrees F when applying heat.

3) Maintain the concrete temperature at between 50 degrees F and 160 degrees F.

4) Maintain the curing temperature until the concrete achieves the specified strength for terminating the curing.

5) Decrease the concrete temperature at a rate not to exceed 40 degrees F per hour until reaching a temperature of not more than 20 degrees F above the air temperature to which the concrete will be exposed when discontinuing heat.

g. Transfer the stressing force to the concrete immediately after discontinuing steam curing or radiant heat curing for prestressed members.

C. Prevent exposed concrete surfaces from drying when transitioning between curing methods.

D. Fogging

1. Use fogging when necessary to prevent drying of exposed concrete surfaces.

2. Use fogging equipment with compressed air misters that atomize the water and produce a very fine mist and not a spray.

a. Use equipment that allows for adjusting the rate of fogging depending on the conditions that are present.

b. Maintain misters at least 5 ft above the concrete surface and aimed in a direction not lower than horizontal.

c. Do not use fogging to apply excess water to the concrete surface to aid finishing.

d. Do not affect the water/cement ratio of the concrete.
e. Discontinue fogging when a fine coating of water or sheen is visible on the concrete surface.

3. Do not damage the concrete surface.

E. Follow the hot and cold weather limitations according to Section 03055.

3.2 CURING COMPOUND APPLICATION

A. Comply with the following when applying liquid membrane-curing compound to structural elements in bridges, box culverts, headwalls, retaining walls, concrete drainage structures, and concrete slope protection.

1. Do not use curing compounds on surfaces that require a rubbed finish or on surfaces of construction joints against which new concrete will be cast, unless the Engineer gives written approval.
   a. Completely remove the curing compound before casting new concrete against the surface when curing compound is allowed.
2. Do not use curing compounds on architectural surfaces that require a concrete coating or penetrating concrete sealer and where removal will diminish the texture.

B. Preparation

1. Verify concrete surfaces are ready for curing.
   a. Complete all patching and surface finishing before applying curing compound.
2. Prepare concrete surfaces and apply curing compound according to product manufacturer's recommendations. Refer to Tables 1 and 2 for application rates.
3. Keep surfaces moist until the curing compound is applied.

3.3 CURE CAST-IN-PLACE CONCRETE

A. Cure all formed surfaces using the FIPM.

B. Cure exposed surfaces of newly placed cast-in-place concrete according to the curing methods and curing periods in Table 1.

1. Determine the concrete compressive strength using field cured cylinders cured the same as the concrete member when compressive strength is used to determine the curing period. The curing period is the specified number of consecutive days when compressive strength is not used to determine the curing period.

Table 1

Cast-in-Place Concrete Curing Requirements				
Element	Curing Methods for Exposed Surfaces [1]	Curing Period [2]	Curing Compound	
			Type	Application Rate
Bridge Decks and Approach Slabs	• LMCCM and WM	14 days	ASTM C309, Type I D, Class A	Manufacturer's recommended rate
Closure Pours in Bridge Decks and Approach Slabs	• LMCCM and WM	7 days and f′c [3]	ASTM C309, Type I D, Class A	Manufacturer's recommended rate
Other Bridge Elements (superstructure, substructure, and foundation elements)	• LMCCM or • WM or • WCM	0.70 f′c or 7 days [3]	ASTM C309, Type I D, Class A	100 ft^2/gal
Box Culverts (including wingwalls, and aprons), Headwalls, Retaining Walls, Concrete Drainage Structures, Sign Structure Foundations	• LMCCM or • WM or • WCM	0.70 f′c or 7 days	ASTM C309, Type I D, Class A	100 ft^2/gal
Concrete barrier	• LMCCM or • WM or • WCM	0.70 f′c or 7 days	ASTM C309, Type I D, Class A or ASTM C1315, Type 1, Class A [4]	100 ft^2/gal
Curbs, gutters, flatwork, sidewalks, driveways, concrete slope protection, and other concrete items not specified	• LMCCM	7 days	ASTM C309, Type I D, Class A	100 ft^2/gal

Table 1 Notes:
[1] Use FIPM for all formed surfaces. Specified curing methods apply to exposed concrete surfaces and any formed surfaces where the forms are removed before the curing period ends.
[2] f'c = specified 28 day minimum compressive strength.
[3] The curing period for bridge elements that use high early strength concrete may be reduced to the greater of 3 days and the time required to achieve the specified 28 day minimum compressive strength. (Refer to Section 03310 for when the use of high early strength concrete is permitted.)
[4] Use a curing compound meeting ASTM C309 when removal is required.

C. Bridge Decks and Approach Slabs
   1. Cure the exposed surfaces of newly placed concrete bridge decks and approach slabs for the specified curing period by a combination of the liquid membrane-curing compound method and the water method.
   2. Apply membrane-curing compound so that no portion of the deck or approach slab is exposed to the atmosphere for more than 20 minutes after the tining or finishing operation.
      a. Use a work bridge that follows immediately after the finishing machine to allow application of the curing compound while the concrete is still plastic.
   3. Cover the entire exposed surface of bridge decks, approach slabs, curbs, and sidewalks as soon as the concrete is sufficiently set to support the materials. Refer to this Section, Article 3.1 for water method requirements.

D. Concrete Barrier
   1. Broom clean the formed surfaces of the barrier after removing forms.
   2. Apply curing compound to exposed concrete surfaces immediately after finishing operations are completed.

3.4 CURE PRECAST CONCRETE

A. Cure all formed surfaces using the FIPM.

B. Cure exposed surfaces of newly placed precast concrete according to the curing methods and curing periods in Table 2.
   1. Determine the concrete compressive strength using field cured cylinders cured the same as the concrete member when compressive strength is used to determine the curing period. The curing period is the specified number of consecutive days when compressive strength is not used to determine the curing period.

Table 2

Precast Concrete Curing Requirements				
Element	Curing Methods for Exposed Surfaces [1]	Curing Period [2]	Curing Compound	
			Type	Application Rate
Precast Concrete Deck Panels (full depth), Precast Approach Slabs, (includes parapets when cast concurrent with precast deck and approach slab panels)	• LMCCM and WM	14 days	ASTM C309, Type I D, Class A	Manufacturer's recommended rate
Precast Substructure Elements, Partial Depth Precast Deck Panels (non-prestressed)	• WM or • SRHM	0.7 f′c or 7 days	Not used	Not used
Prestressed Concrete Members (includes all pretensioned concrete members where pretensioning is required in the plans)	• SRHM or • WM or • WCM	Specified release strength (f'ci)	Not used	Not used
Precast Noise Walls, Precast Retaining/Noise Walls, MSE Retaining Wall Panels	• SRHM or • WM or • WCM	0.70 f′c or 7 days	Not used	Not used
Precast Box Culvert Structures and Precast Three-Sided Culvert Structures (wet cast and dry cast)	• SRHM or • WM or • WCM • LMCCM	0.70 f′c or 7 days	ASTM C309, Type I D, Class A	100 ft^2/gal
Wet Cast Concrete Drainage Structures (such as manholes, grade rings, catch basin grade sections, pipe end sections, precast inlets and boxes)	• SRHM or • WM or • WCM • LMCCM	0.50 f′c or 7 days	ASTM C309, Type I D, Class A	100 ft^2/gal
Modular Block (wet cast)	• WM or • WCM or • LMCCM	0.70 f'c or 7 days	ASTM C309, Type I D, Class A	100 ft^2/gal

Table 2 (Continued)

Precast Concrete Curing Requirements				
Element	Curing Methods for Exposed Surfaces [1]	Curing Period [2]	Curing Compound	
			Type	Application Rate
Concrete Barrier	• LMCCM	7 days and until certified according to QMP [3]	ASTM C1315, Type 1, Class A	100 ft^2/gal
PCC Pavement Panels	• LMCCM and WM	14 days	ASTM C309, Type I D, Class A	Manufacturer's recommended rate

Table 2 Notes:
[1] Use FIPM for all formed surfaces. Specified curing methods apply to exposed concrete surfaces and any formed surfaces where the forms are removed before the curing period ends.
[2] f'c = specified 28 day minimum compressive strength.
[3] QMP = UDOT Quality Management Plan: Precast-Prestressed Concrete Structures.

C. Precast Concrete Deck Panels (full depth), and Precast Approach Slabs
   1. Refer to this Section, Article 3.3, paragraph C.

D. Precast Concrete Barrier
   1. Broom clean the formed surfaces of the barrier after removing forms.
   2. Apply curing compound to exposed concrete surfaces immediately after finishing operations are completed.

END OF SECTION

Supplemental Specification
2012 Standard Specification Book

SECTION 03393M

CONCRETE HEALER/SEALER

Delete Article 1.5, paragraph B.

Delete Article 2.1, paragraph A and replace with the following:

A. Use approved low viscosity, low modulus polymer or high molecular weight methacrylate (HMWM) system.
   1. Refer to Table 1 for concrete healer/sealer properties.

Delete Article 3.1, paragraph B and replace with the following:

B. Healer/Sealer Systems
   1. Deliver materials to the project in their original containers bearing the manufacturer's label specifying the date of manufacturing, batch number, trade name brand, quantity, and mixing ratio.

Delete Article 3.3, paragraph C and D and replace with the following:

C. Handle and mix according to the manufacturer's recommendations.

D. Apply the concrete healer/sealer to the entire prepared concrete surface according to the manufacturer's recommendations.
   1. Do not place materials when weather or surface conditions prevent the material from being properly handled, placed, and cured.
   2. Completely cover or flood the deck with the material. Coverage rates will vary depending on the existing surface conditions.
      a. Sweep, squeegee, pour, or spray the area with the sealer allowing it to flow into the cracks.
   3. Place all material within five minutes of mixing.
   4. Repeat this procedure until all cracks are completely filled and a uniform coating covers the deck.
   5. Sweep excess sealer with a broom from tined surfaces after the cracks have been filled and before the material begins to gel.
   6. Do not allow excess sealer to plug the tined surfaces of the bridge deck and approach slabs.

Add Article 3.3, paragraph I:

I. Verify that the application has not caused the deck to become less skid resistant than the original deck surface as measured before the application according to AASHTO T 242. Take the necessary measures to correct the surface skid resistance if the deck does become less skid resistant after the application.

Supplemental Specification
2012 Standard Specification Book

SECTION 05120M

STRUCTURAL STEEL

Delete Article 1.3 and replace with the following:

1.3 REFERENCES

A. AASHTO M 111: Zinc (Hot-dip Galvanized) Coatings on Iron and Steel Products

B. AASHTO M 270: Structural Steel for Bridges

C. AASHTO LRFD Bridge Construction Specifications

D. AASHTO LRFD Bridge Design Specifications

E. AASHTO/AWS D1.5 Bridge Welding Code

F. ASTM A 194: Carbon and Alloy Steel Nuts for Bolts for High Pressure or High Temperature Service, or Both

G. ASTM A 325: Structural Bolts, Steel, Heat Treated, 120/105 ksi Minimum Tensile Strength

H. ASTM A 563: Carbon and Alloy Steel Nuts

I. ASTM F 436: Hardened Steel Washers

J. ASTM F 606: Determining the Mechanical Properties of Externally and Internally Threaded Fasteners, Washers, Direct Tension Indicators, and Rivets

K. ASTM F 959: Compressible-Washer-Type Direct Tension Indicators for Use With Structural Fasteners

L. American Institute of Steel Construction (AISC)

M. Society for Protective Coatings (SSPC)

N. UDOT Quality Management Plan

O. UDOT Steel and Concrete Construction Manual

Delete Article 1.5, paragraph B.1 and replace with the following:

1. Manufacturer's certificate of compliance for nut, bolt, and washer proof load tests as specified. Refer to ASTM F 606 and ASTM A 325.
   a. Provide Certificate showing corresponding lot numbers appearing on the shipping package, certification, test location, time and date, and results of the testing.
   b. Include rotational capacity and proof load test results.

Delete Article 2.2, paragraph C.1 and replace with the following:

1. Refer to ASTM A 194 or ASTM A 563.

Delete Article 2.2, paragraph D and replace with the following:

D. Washers – Refer to ASTM F 436.

Supplemental Specification
2012 Standard Specification Book

SECTION 06055M

TIMBER AND TIMBER TREATMENT

Delete Article 1.3 and replace with the following:

1.3 REFERENCES

A. AASHTO M 133: Preservatives and Pressure Treatment Processes for Timber

B. AASHTO M 168: Wood Products

C. AASHTO LRFD Bridge Requirements

D. Southern Pine Inspection Bureau (SPIB) Standard Grading Rules

E. Western Wood Products Association (WWPA) Standard Grading Rules

Delete Article 2.3 and replace with the following:

2.3 TREATMENT

A. Meet requirements of AASHTO LRFD Bridge Requirements.

B. Meet requirements of AASHTO M 133.

June 27, 2013

SPECIAL PROVISION

PROJECT # S-I15-1(113)5
PIN # 12780

SECTION 13551M

GENERAL ATMS REQUIREMENTS

Delete Article 1.3, paragraphs D through K and replace with the following:

D. ASTM B 800: 8000 Series Aluminum Alloy Wire for Electrical Purposes

E. ASTM F 1554: Anchor Bolts, Steel, 36, 55, and 105-ksi Yield Strength

F. American Wire Gauge (AWG)

G. International Building Code (IBC)

H. International Municipal Signal Association (IMSA)

I. Manual on Uniform Traffic Control Devices (MUTCD)

J. National Electrical Code (NEC)

K. National Electrical Safety Code (NESC)

L. Underwriters Laboratory (UL)

Delete Article 2.1 and replace with the following:

2.1 WIRING

A. Power Conductors
   1. Size – AWG size and material as specified.
   2. Material – Wire to be copper or aluminum, as specified.
      a. Copper Wire. Refer to NEC.
      b. Aluminum Wire
         1) Series 8000 aluminum. Refer to ASTM B 800.
         2) Concentric, condensed or compacted wire is acceptable.
      c. Insulation – Cross linked polyethylene, RHH/ USE-2/ RHW-2, resistant to oil, gasoline and sunlight.

d. Cable to be stranded single conductor.

B. Signal Cable
1. Multi-colored cables and specified.
2. Refer to IMSA 20.1.
3. Use copper wire only.

C. Detector Cables – Refer to Section 13591.

D. Ground Wire
1. Stranded insulated soft drawn copper, or stranded insulated aluminum wire, as specified.
2. Insulation – Green crosslinked polyethylene, RHH/ USE-2/ RHW-2, resistant to oil, gasoline and sunlight.
5. Refer to NEC section 250.

E. Power Conductor Connectors
1. Connectors to be suitable for the type and gauge of wire being connected
2. Suitable for submersion and direct bury.
   a. UL listed for the type and size of conductors being joined.
   b. Set screw type connection with standard hex socket.
   c. Field adaptable cable sleeves to accurately fit size of cables being connected.
   d. Factory assembled and tested for water tightness.
   e. Connectors to have four conductor connection points.

F. Aluminum Ground Wire Connections – Non-reversible compression connector suitable for copper and aluminum wire.

G. Self Fusing Rubber Electrical Tape – 30 mil minimum, ethylene propylene rubber self fusing tape.

H. Vinyl Electrical Tape – 8.5 mil vinyl insulating electrical tape.

I. Electrical Coating – Liquid electrical coating suitable for direct burial and water immersion.

J. Thick Wall Heat Shrink Tubing – Thick wall polyolefin tubing with factory applied adhesive; 3:1 shrink ratio; UL 486D listed; and suitable for direct burial.

Delete Article 3.12, paragraphs A and B and replace with the following:

A. Power Conductors
   1. Verify conduit is free of dirt and debris according to Section 13553 before installing conductors.
   2. Install grounding conductor in all conduits containing metallic conductors or metallic cable armor or strength members. Refer to NEC, Section 250.
   3. Use NEC approved lubricants when pulling conductors in conduit.
   4. Protect wire during installation according to Section 13553.
   5. Cap wire and cable tape and seal the ends of unused conductors and label them as spares.
   6. Use conductors that are color coded as specified in IMSA and comply with NEC, Article 310.
   7. Leave 6 ft of slack conductor in each junction box that the conductor passes through.
      a. Loop slack conductors twice around the ground rod and secure with plastic wire ties.
   8. Make aluminum wire connections by mechanically cleaning oxidation from wire, immediately applying oxide inhibitor, installing connector with manufacturer's recommended torque, loosening, and retightening to the manufacturer's recommended torque.
   9. Do not use twist-type or wire nut connectors except in dry step-down transformer enclosures.

B. Ground Wire
   1. Copper ground wire in non-metallic conduit must run continuously between and be bonded to ground rods in each junction box.
   2. Aluminum ground wire in non-metallic conduit must run continuously between junction boxes, and be bonded to the ground rod in each junction box, using a 24 inch insulated copper pigtail wire.
      a. Copper pigtail wire gauge to match aluminum ground wire gauge.
      b. Mechanically clean conductors and immediately apply corrosion inhibiting compound to aluminum ground wire.
      c. Compress connector according to manufacturer's instructions.

3. Insulation and Waterproofing. – Use either self-fusing rubber tape or thick walled heat tubing to insulate and waterproof all ground wire splices.
   a. Self fusing rubber tape.
      1) Wrap ground wire and connector with two half lapped layers of self-fusing rubber electrical tape.
         a) Wrap beginning at the center of the splice and extend the wrap 1inch beyond the end of stripped insulation, using moderate tension.
      2) Wrap self-fusing rubber tape with vinyl electrical tape.
         a) Wrap beginning at the center of the splice and extend the wrap 1 inch beyond the ends of self-fusing rubber tape, using moderate tension.
      3) Coat vinyl electrical tape with electrical coating.
         a) Extend coating 1 inch beyond the vinyl tape layer.
   b. Thick walled heat shrink tubing.
      1) Clean thoroughly cable and slide tubing onto cable.
      2) Center heat shrink tubing over connection and shrink tubing, beginning at the center.
         a) Extend tubing 2 inches past end of removed ground wire insulation.
      3) Heat until tubing is completely shrunk, and adhesive/sealant is squeezed from tubing ends.
         a) Take care to not damage ground wire insulation.
      4) Coat vinyl electrical tape with electrical coating.
         a) Extend coating 1 inch beyond the vinyl tape layer.

Supplemental Specification
2012 Standard Specification Book

SECTION 13551M

GENERAL ATMS REQUIREMENTS

Add the following to Article 3.13:

H. Maintain in operable condition all existing ATMS devices and fiber optic cable until they are replaced by operable contractor-installed items or until Final Acceptance.
   1. Complete repairs within 48 hours of notice given by the Engineer.
   2. Failure to provide adequate repairs will result in the Department making the necessary repairs at the Contractor's Expense.

September 14, 2016

SPECIAL PROVISION

PROJECT # S-I15-1(113)5
PIN # 12780

SECTION 13553M

ATMS CONDUIT

Delete Article 2.1, paragraph B2b and replace with the following:

b. 2D (within bridge crossing section) = eight 1.25-inch conduits

Add Article 2.1, paragraph B2d:

d. 2D (not within bridge crossing section) = eight 2-inch conduits

Supplemental Specification
2012 Standard Specification Book

SECTION 13553M

ATMS CONDUIT

Delete Article 1.3, paragraph G and replace with the following:

G. State of Utah Administrative Rules

Delete Article 1.5 paragraph B and replace with the following:

B. Refer to this Section articles 3.2 paragraph F4, 3.2 paragraph I1, and 3.7 paragraph A.

Delete Article 2.1 paragraph A3 and replace with the following:

3. HDPE conduit with ribbed or smooth interior.

Add Article 2.1, paragraph A6:

6. Microduct
   a. HDPE microduct with an outside/inside diameter of 0.630/0.512 inch.
   b. Microduct having a ribbed interior.
   c. Watertight couplers rated for a minimum of 200 psi.
   d. Microduct bundle within a single 0.070 inch thick polyethylene oversheath.
   e. Microduct bundles must contain a factory installed #14 AWG solid, insulated locate wire and a minimum of two rip cords for removal of oversheath.

Add Article 2.1, paragraph B4 and 5:

4. Microduct types:
   a. Individual 0.630/0.512 inch (16/13 mm) microducts installed loosely within new or existing conduit.
   b. MD2, MD3, MD4 and MD7: microduct bundle containing two, three, four or seven 0.630/0.512 inch microducts respectively.

c. Only factory-assembled bundles are allowed in bundled applications.

5. Color-code microducts and oversheaths as follows:
   a. Individual microducts installed loosely within conduit or bundled within oversheath:
      1) blue
      2) orange
      3) green
      4) brown
      5) slate
      6) white
      7) red
      8) black
   b. Oversheaths:
      Bundle #1 orange
      Bundle #2 blue
      Bundle #3 green
      Bundle #4 brown.

Add Article 2.1, paragraph H4 and 5:

4. Sand
   a. Friable natural river or bank aggregate, free of loam, detrimental, or soluble or organic matter.
   b. $^{3}/_{8}$ inch minus, well graded.
   c. Refer to this Section, Article 3.3, paragraph C3 for placement and compaction requirements.
5. Hand-mix grout
   a. Minimum strength – 50 psi
   b. Maximum strength – 150 psi
   c. Slump – 5 inches to 10 inches

Delete Article 3.1 paragraph B and replace with the following:

B. The placement of conduit in areas of parallel utilities must meet Department Utilities and Local Utilities standards and be approved by the Engineer. Refer to State of Utah Administrative Rule R930-7.

Delete Article 3.1 paragraph H and replace with the following:

H. Minimum Cover of Conduit

1. Minimum cover in pavement is 4ft and minimum cover in sidewalks is 3 ft.

2. Minimum cover in highway right-of-way, greater than 20 ft from the edge of the pavement is 3 ft.
3. Minimum cover in highway right-of-way, within 20 ft of the edge of the pavement is 5 ft.
4. Refer to State of Utah Administrative Rule 930-7.

Delete Article 3.2 paragraph F and replace with the following:

F. Proof all conduit before installation of cabling and detectable pull tape.
   1. Use a mandrel approved by the Engineer.
   2. Schedule proofing with the Engineer at least 5 working days in advance of performing the work.
   3. Proof all conduit with a Department representative witness present.
   4. Submit a completed Conduit Mandrel Test form to the Engineer for all ATMS conduit prior to Final Acceptance. Refer to http://www.udot.utah.gov/go/standardsreferences.
   5. Proof microducts using approved proofing balls.
   6. Mandrels and proofing balls must maintain a minimum 80 percent fill ratio of inside diameter of the conduit or microduct being tested.
   7. Proofing must occur after all junction boxes have been installed to final grade, including placement of flowable fill or hand-mix grout at junction box walls, and after all excavation in the immediate proximity of the conduit system has been completed.
      a. Re-proof any conduit segment where excavation has occurred near the conduits following initial proof testing and prior to final project acceptance.

Add Article 3.2, paragraph G6:

6. Detectable pull tape not required in microducts.

Delete Article 3.2, paragraph K and replace with the following:

K. Encase open trench conduit in sand backfill covered by flowable fill within existing roadway, proposed roadway and sidewalk pavement areas only.
   1. Seal junction box wall around conduits using flowable fill or approved hand-mix grout.
   2. Use sand backfill in all other areas.
   3. Refer to AT Series Standard Drawings.

Delete Article 3.2 paragraph O and P and replace with the following:

O. Install a bushing or adapter at ends of all nonmetallic conduit that contain a conductor according to the NEC.

P. Furnish and install Utility Marker Posts along the longitudinal conduit running line. Refer to AT Series Standard Drawings.

Q. Verify that the microduct bundle locate wire is detectable throughout its entire length by performing a continuity test or equivalent verification.

Delete Article 3.3, paragraph C3 and replace with the following:

3. Sand Backfill
   a. Use sand backfill in trench sections outside of existing roadway, proposed roadway, and sidewalk pavement areas, including exposed conduit locations when plowing or boring.
   b. Provide 12 inches of sand backfill above conduit in trench.
      1) Backfill trench above sand to finished grade using native material.
   c. Compaction of sand backfill is not required.

Delete Article 3.3, paragraph F and G and replace with the following:

F. Flowable Fill or Hand-mix Grout
   1. Install flowable fill or approved hand-mix grout to the wall of junction box to seal conduit entry into junction box.
   2. Clean excess flowable fill or hand-mix grout from the inside of the junction box.

G. Install all conduits so the flowable fill or sand backfill completely encases all exterior surfaces of the conduit.
   1. Separate multi-duct conduits using a commercially available conduit spacer or approved equivalent.
   2. Place spacers no more than 4 ft apart and not more than 2 ft from each coupler.

Delete Article 3.3, paragraph J

Add Article 3.5, paragraph E:

E. Intercept individual microducts from existing microduct bundle mid-span and reroute to new junction box location:

1. Type II-PC junction box
    a. Bury at existing microduct bundle depth.
    b. Notch the 24-inch box walls and install junction box over existing microduct bundle.
    c. Provide 12 inches of free draining granular backfill borrow underneath junction box.
    d. Encase all conduit in flowable fill or approved hand-mix grout where the conduit enters the junction box.
    e. Place marker ball or disk in junction box.
    f. Ground rod, concrete collar, and grout floor are not required.
    g. Verify that flowable fill is not in contact with the junction box lid by placing 6 inches of untreated base course or sand backfill on lid to allow future access when flowable fill backfill is required to bottom of new pavement.
2. Conduit and microduct bundle inside of buried Type II-PC junction box.
    a. Install conduit from buried junction box to new junction box location for rerouting of individual microducts. Provide a #14 AWG solid, insulated locate wire inside of new conduit between junction boxes.
    b. Extend conduit and microduct oversheath 6 inches beyond inside wall of the junction box.
    c. Expose microducts by removing no more than 20 inches of oversheath.
    d. Identify and cut only the individual microducts to be rerouted.
    e. Use approved couplers and extend microducts to new junction box using corresponding microduct color.
    f. Splice all locate wires together using an approved waterproof connector.
        1) Verify that the locate wire conductors are not exposed.
3. New junction box location
    a. Install new junction box within 20 ft of buried junction box or within 20 ft . of edge of roadway when existing microduct bundle is underneath roadway, to provide access to locate wire for mapping and locating purposes.

Add Article 3.6, paragraph E:

E. Buried microduct bundle coupling and repair:
   1. Expose microducts by removing no more than 12 inches of oversheath beyond area to be coupled or repaired.
      a. Trim microducts to length as necessary to eliminate all bends and deflection.
   2. Use approved couplers.
   3. Splice the locate wires together using an approved waterproof connector.
      a. Verify that the locate wire conductors are not exposed.
   4. Protect exposed microducts, couplers and locate wire using split duct.
      a. Seal split duct joints and split duct ends around microduct bundle oversheath using approved waterproof sealing tape prior to backfill.

Supplemental Specification
2012 Standard Specification Book

SECTION 13554M

POLYMER CONCRETE JUNCTION BOX

Add Article 2.1, paragraph D:

D. Hand-mix grout
   1. Minimum strength – 50 psi
   2. Maximum strength – 150 psi
   3. Slump – 5 inches to 10 inches

Delete Article 2.2, paragraph B and replace with the following:

B. Furnish boxes, rings, and lids that meet all the requirements of ANSI/SCTE 77, including Tier 22 loading.

Delete Article 2.2, paragraph D4 and replace with the following:

4. "UDOT Fiber Optics" when the junction box contains fiber optic cable or future use multi duct conduit.

Delete Article 2.3, paragraph A and replace with the following:

A. Furnish and install Utility Marker Posts for each junction box location. Refer to AT Series Standard Drawings.

Delete Article 3.2, paragraph B2 and B3 and replace with the following:

2. Seal conduit and microduct ends inside all junction boxes with at least 2 inch thick duct seal after cables are installed.
3. Seal vacant conduit and microducts with a manufactured conduit plug and attach detectable pull tape where applicable. Refer to Section 13553.

Delete Article 3.2, paragraph F2 and replace with the following:

2. Extend PVC conduit 2 inches, HDPE conduit 6 inches, microduct oversheath 6 inches and individual microducts 2 ft beyond the inside wall of the junction box.

Delete Article 3.2, paragraph J and replace with the following:

J. Encase all conduit in flowable fill or approved hand-mix grout where the conduit enters the junction box.

June 27, 2013

SPECIAL PROVISION

PROJECT # S-I15-1(113)5
PIN # 12780

SECTION 13555M

ATMS CABINET

Add Article 2.9:

2.9 WIRING

A. Refer to Section 13551.

Supplemental Specification
2012 Standard Specification Book

SECTION 13555M

ATMS CABINET

Delete Article 3.4, paragraph C, and replace with the following:

C. Arrange all equipment installed in the cabinet in a neat and orderly fashion on shelf or on DIN rail mount unless otherwise approved by the Engineer.

Supplemental Specification
2012 Standard Specification Book

SECTION 13556M

CLOSED CIRCUIT TELEVISION (CCTV) ASSEMBLY

Delete Article 2.1, paragraph B, and replace with the following:

B. Camera Lowering Pole – State furnished 45 ft, 60 ft, or 75 ft steel pole with anchor bolts.

Supplemental Specification
2012 Standard Specification Book

SECTION 13559M

NON-INTRUSIVE DETECTOR (NID) SYSTEM

Add Article 1.3, paragraph D:

D. SmartSensor™ User's Guide (SSUG)

Delete Article 3.2, paragraphs D - H and replace with the following:

D. Refer to the following for installation guidance:
   1. SSIG
   2. SSUG
   3. AT Series Standard Drawings
   4. SL Series Standard Drawings

E. NID Surge Protectors
   1. Install NID surge protector in NEMA Type 4X enclosure between NID device and ATMS cabinet. Mount NEMA Type 4X enclosure on pole, luminaire extension, vertical attachment, arm, or mast arm, 60 inches +/- 6 inches above grade at pole base.
   2. Install additional NID surge protector in the ATMS cabinet with the 24 VDC power supply.

F. Clear equipment exterior of all loose rust and mill scale, dirt, oil, grease, and other foreign substances.

G. Use offset bracketing or other method to ensure that NIDs are mounted out of the lowering path on camera poles with camera lowering devices in use.

June 27, 2013

SPECIAL PROVISION

PROJECT # S-I15-1(113)5
PIN # 12780

SECTION 13561M

ATMS POWER SERVICE

Delete Article 2.1, paragraph M.

Supplemental Specification
2012 Standard Specification Book

SECTION 13594M

FIBER OPTIC COMMUNICATION

Delete Article 1.5, paragraph D and replace with the following:

D. Required Post Construction Final Submittal
   1. OTDR Test Results
      a. Include both electronic PDF and OTDR generated versions of each test result.
      b. Current OTDR calibration certificate.
      c. Electronic submittal on two CDs or USB Flash Drives.
   2. Power Meter/Light Source Test Results
      a. Obtain the current test form from the UDOT Fiber Group Representative.
      b. Include electronic PDF version of completed test form with electronic submittal.
   3. Submit all required fiber tests according to Section 13551 and this section.

Delete Article 1.6 and replace with the following:

1.6 SPLICE PLANS

A. Request Project Splice Plans from the Engineer and UDOT Fiber Manager.
   1. Include splice details, testing forms and device assignments to fiber channels in Splice Plans.
      a. The 30-day Splice Plan delivery period begins once a written request is submitted to the Engineer and Fiber Manager by the Contractor and according to the requirements below:
   2. Following preliminary placement of all junction boxes designed to contain fiber optic cabling and fiber optic drop cabling at all device cabinet locations.
   3. 30 days before the desired start date of splicing and termination.

B. A field mapping review is required and will be performed by the Fiber Group Representative to initiate Splice Plan production.
   1. Provide onsite coordination during the field mapping review.
   2. The 30-day Splice Plan delivery period may be delayed in the event that all junction boxes are not present during the field mapping review.

C. The Engineer and Fiber Manager reserve the right to reduce the 30-day Splice Plan delivery period at their discretion.

D. Submit a written request to the Engineer for a reduction of the 30-day Splice Plan delivery period if necessary due to the project schedule.

Add Article 2.2, paragraph D1:

1. Individual buffer tubes may contain 6 or 12 fiber strands only.

Delete Article 2.2, paragraph D, Table 1 and replace with the following:

Table 1

Fiber Optic Glass Optical Fiber Specifications	
PARAMETERS	**SINGLE MODE**
Type	**Step Index**
Core Diameter	8.2 µm (Nominal)
Cladding Diameter	125µm ± .7 µm
Core to Cladding Offset	≤ 0.8 µm
Coating Diameter (OSP)	245 µm ± 5 µm
Coating Diameter (IP)	900 µm ± 15 µm
Cladding Non-circularity	≤ .7%
Proof Tensile Test	100 kpsi (0.7 GN/m²)
Attenuation (Maximum Allowed)	
@ 850nm(MM)	N/A
@ 1300nm(MM)	N/A
@ 1310nm(SM)	0.40 dB/km
@ 1550nm(SM)	0.30 dB/km
Bandwidth	
@ 850nm(MM)	N/A
@ 1300nm(MM)	N/A
Chromatic Dispersion	
Zero Dispersion	1301.5/1321.5 nm
Wavelength Zero	
Dispersion Slope	≤ 0.092 ps/(nm²·km)
Maximum Dispersion	3.3 ps/(nm·km) for 1285-1330nm < 18 ps/(nm·km) for 1550nm
Cut-Off Wavelength	1260 nm
Numerical Aperture	
(EIA-455-47)	N/A

Delete Article 2.3, paragraph C4 and replace with the following:

4. Include electronic PDF version of test report with the electronic submittal.

Add Article 2.7, paragraph A9 and 10:

9. Six cable ports and applicable hardware
10. Dome style enclosure

Add Article 2.8, paragraph D:

D. Store all excess splice enclosure parts and hardware within the manufacturer supplied plastic bag and place inside of the enclosure for future use.

1. Verify all parts and hardware are securely fastened inside of the enclosure to prevent damage of fiber optic buffer tubes and strands.

a. Loose parts and hardware inside of the enclosure are strictly prohibited.

Delete Article 3.2, paragraph I1b and replace with the following:

b. Fiber Splice Point Junction Box or Vault (Cable End) 50 ft
(Ring Cut Location) 100 ft

Add Article 3.2, paragraph L:

L. Install microfiber cable into microduct by jetting or blowing method only and install into standard conduit sizes by pulling method only.

Delete Article 3.5, paragraph B4 and replace with the following:

4. Use heat shrink tubing containing internal strength member to provide additional protection and strain relief of each fusion splice inside of splice tray.

Delete Article 3.7, paragraph B2 and replace with the following:

1. Submit all test results according to Section 13551 and this Section.

Delete Article 3.7, paragraph B4j and k and replace with the following:

j. Submit electronic PDF version of fiber optic testing report on two CDs or USB Flash Drives, and organize by cable and strand number.

k. A cover sheet is required for each electronic PDF fiber optic testing report indicating which cables were tested, OTDR user's name, reviewer's name, test type performed, and the test date.

Delete Article 3.7, paragraph B4n and replace with the following:

n. Submit to the UDOT Fiber Optic Group on two CDs or USB Flash Drives with printed indexes.
   1) Contact the UDOT Traffic Operations Center, 2060 South 2760 West, Salt Lake City, UT 84104 at (801) 887-3780 or (801) 887-3765 for delivery instructions and contact name.

Delete Article 3.7, paragraph B5b and replace with the following:

b. Cable attenuation 0.3 dB/km at 1550 nm excluding splices described in the contract or authorized by the Engineer.

Delete Article 3.7, paragraph B6a and replace with the following:

a. Connect the light source to the connectorized fiber at the location identified on the Fiber Optic Light Source Power Meter Test Form provided by the Engineer or Fiber Optic Group Representative.
   1) Connect a power meter to the other end of the fiber at the location identified on the test form.
   2) Record the results and include an electronic PDF version of completed test form with the electronic submittal.